DELUX *Continuous Flow* GRAIN DRYERS



INSTALLATION AND OPERATION MANUAL

MODELS

DP SERIES						DPSL SERIES		
DP	2510	10FT	DP	3015	10FT	DPSL	3520	10FT
DP	3015	10FT	DP	4025	15FT	DPSL	4530	15FT
DP	4020	15FT	DP	6030	20FT	DPSL	7040	20FT
DP	5020	20FT	DP	7550	25FT	DPSL	8560	25FT
DP	7530	30FT	DP	9045	30FT	DPSL	10560	30FT
DP	10040	40FT	DP	12060	40FT	DPSL	14080	40FT

DELUX MFG. CO.

4650 AIRPORT ROAD, P.O. BOX 1027
KEARNEY, NE 68848-1027
308-237-2274 FAX:308-234-3765
800-658-3240
WEB: http://www.deluxmfg.com

TABLE OF CONTENTS

BROCHURE AND SPECIFICATIONS

SECTION 1. GENERAL

A. INTRODUCTION
B. USE OF MANUAL
C. !!!***SAFETY CODE!!!***
D. SERVICE INFORMATION
E. WARRANTY PROCEDURES
F. **DELUX STANDARD LIMITED WARRANTY**

SECTION 2. GRAIN DRYER PERFORMANCE CHART

SECTION 3. GRAIN SHRINKAGE TABLE

SECTION 4. DRYER OPERATING LOG

SECTION 5. INSTALLATION

A. BEFORE DELIVERY
B. SETUP
C. ELECTRICAL
D. FUEL CONNECTION

SECTION 6. ELECTRICAL – FUEL HOOK-UP AND CHECKOUT

SECTION 7. STARTUP PROCEDURE

SECTION 8. SYSTEM OPERATION

SECTION 9. SYSTEM SEQUENCE ANALYSIS

SECTION 10. SHUTDOWN AND ***EMERGENCY SHUT-DOWN*** PROCEDURE

SECTION 11. DRAWINGS

SECTION 12. GENERAL OPERATOR MAINTENANCE

SECTION 13. REPLACEMENT PARTS

SECTION 14. COMPONENT LITERATURE

SECTION 15. SUNFLOWER DRYING RECOMMENDATIONS

GENERAL

A. INTRODUCTION

DELUX MFG COMPANY OF KEARNEY, NEBRASKA HAS MANY YEARS OF EXPERIENCE IN PRODUCING ENERGY SAVING, HIGH CAPACITY CONTINUOUS FLOW GRAIN DRYERS FOR BOTH FARM AND COMMERCIAL APPLICATIONS.

DELUX GRAIN DRYERS ARE DESIGNED AND MANUFACTURED TO PRODUCE QUALITY GRAIN AT A PROFIT. AN IDEAL BALANCE OF HOLDING CAPACITY, AIR FLOW, HEAT AND EXPOSURE TIME ARE PROVIDED. ALL DRYERS ARE DESIGNED FOR CONTINUOUS FLOW OPERATION. GRAIN ENTERS THE ROOF SECTION OF THE DRYER WHERE IT IS PREHEATED AS IT FLOWS DOWN INTO THE COLUMNS WHERE THE DRYING PROCESS IS STARTED. TWELVE(12) INCH GRAIN COLUMNS ON EACH SIDE OF THE DRYER PROVIDE FOR MAXIMUM FUEL EFFICIENCY AND MINIMUM GRAIN MOISTURE DIFFERENTIAL ACROSS THE COLUMNS. AS THE GRAIN ENTERS THE COOLING CHAMBER, OUTSIDE AMBIENT AIR IS DRAWN THROUGH THE WARM GRAIN REDUCING THE DRYER FUEL CONSUMPTION OVER COMPETITIVE CONVENTIONAL DRYERS, THUS COMPLETING THE DRYING PROCESS AND CONDITIONING THE GRAIN FOR A LONG SAFE STORAGE LIFE.

B. USE OF MANUAL

THIS MANUAL PROVIDES OPERATION AND SERVICE RECOMMENDATIONS ALONG WITH A REPLACEMENT PARTS LIST FOR YOUR DELUX GRAIN DRYER.

EACH SECTION OF THIS MANUAL IS FULLY ILLUSTRATED FOR FAST, ACCURATE REFERENCE. **IT IS HIGHLY RECOMMENDED THAT THIS MANUAL BE READ THOROUGHLY BY THOSE WHO ARE RESPONSIBLE FOR THE OPERATION AND MAINTENANCE OF THIS MACHINE.** REFER TO THE TABLE OF CONTENTS FOR THE LOCATION OF SPECIFIC INFORMATION.

C. SAFETY CODE---------USE CAUTION IN OPERATING THIS EQUIPMENT.

!!THE DESIGN AND MANUFACTURE OF THIS DRYER IS DIRECTED TOWARD OPERATOR SAFETY!!

USE EXTREME CAUTION IN WORKING AROUND HIGH SPEED FANS, GAS FIRED BURNERS, DISCHARGE AUGERS, AND AUXILIARY AUGERS, WHICH MAY START WITHOUT WARNING WHEN THE DRYER IS OPERATING ON AUTOMATIC CONTROLS.

CONTINUED SAFE, DEPENDABLE OPERATION OF AUTOMATIC EQUIPMENT DEPENDS TO A GREAT DEGREE UPON THE OWNER. FOR A SAFE DEPENDABLE DRYING SYSTEM, FOLLOW THE RECOMMENDATIONS WITHIN THE MANUAL AND MAKE IT A PRACTICE TO REGULARLY INSPECT THE OPERATION OF THE UNIT FOR ANY DEVELOPING PROBLEMS OR UNSAFE CONDITIONS. **KEEP A CLEAN DRYER**. **DO NOT ALLOW FINE MATERIAL TO ACCUMULATE ON THE PLENUM FLOOR OR A TRASH FIRE CAN RESULT. CHECKING THE DRYER AT LEAST EVERY 24 HOURS AND CLEANING WILL HELP PREVENT PROBLEMS.**

DRYER SHOULD NOT BE LEFT UNATTENDED FOR EXTENDED PERIODS OF TIME!!

D. SERVICE INFORMATION

OUR SERVICE DEPARTMENT WILL PROVIDE CONSULTATION ON THE INSTALLATION, OPERATION, AND MAINTENANCE TO YOU. ALSO, INFORMATION FROM YOU REGARDING ENCOUNTERED OPERATION OR SERVICE PROBLEMS THAT ARE NOT COVERED IN THIS MANUAL WILL BE GREATLY APPRECIATED.

DELUX MFG COMPANY HAS TRAINED SERVICE TECHNICIANS AVAILABLE TO ASSIST YOU IN THE EVENT YOU OR YOUR DEALER CANNOT CORRECT A PROBLEM. A PHONE CALL TO DELUX MFG COMPANY WILL PROVIDE AN ANSWER TO YOUR SERVICE PROBLEMS.

DELUX MFG COMPANY KEEPS A COMPLETE RECORD OF EACH CUSTOMER ORDER. HOWEVER, VALUABLE TIME CAN BE SAVED IF THE INFORMATION BELOW IS PROVIDED WITH YOUR INQUIRY. IT IS SUGGESTED THAT YOU OBTAIN THE MODEL NUMBER AND SERIAL NUMBER LOCATED IN THE ELECTRICAL CONTROL BOX ENCLOSURE AND ENTER IT BELOW FOR YOUR OWN RECORDS:

DEALER:_____

DATE OF PURCHASE:_____

MODEL:_____

SERIAL NUMBER:_____

CALL OR WRITE: DELUX MFG COMPANY
4650 AIRPORT ROAD
P.O. BOX 1027
KEARNEY, NE 68848-1027

PHONE: 308-237-2274 TOLL FREE: 800-658-3240
FAX: 308-234-3765 WEB: http://www.deluxmfg.com

E. WARRANTY PROCEDURES:

ALL WARRANTY ISSUES, PARTS AND SERVICE REQUESTS SHOULD BE HANDLED THROUGH YOUR LOCAL DEALER. IN THE CASE NO DEALER OR REPRESENTATIVE EXISTS IN YOUR AREA, OR A CONFLICT OF INTEREST EXISTS WITH YOUR DEALER AND/OR REPRESENTATIVE, PLEASE CONTACT THE DEPARTMENT OF ENGINEERING AND SERVICE AT DELUX MFG. COMPANY FOR PROCEDURES TO FOLLOW.

WARRANTY ON ALL DEFECTIVE PARTS MANUFACTURED BY DELUX MFG COMPANY WILL BE LIMITED TO THE SPECIFICATIONS SET FORTH BY THE INFORMATION PROVIDED BY DELUX MFG COMPANY IN IT'S STANDARD LIMITED WARRANTY POLICY. WARRANTY ON ALL DEFECTIVE PARTS NOT MANUFACTURED BY DELUX MFG COMPANY ARE LIMITED TO THE WARRANTIES PROVIDED BY THAT PART'S MANUFACTURER. THIS INCLUDES, BUT IS NOT LIMITED TO, ELECTRIC MOTORS, GEARHEADS, VALVES, REGULATORS AND OTHER PARTS.

DELUX MFG COMPANY IS NOT RESPONSIBLE FOR DEFECTIVE PARTS NOT OF ITS MANUFACTURE

AUTHORIZATION FOR CREDIT OR REPLACEMENT UNDER WARRANTY FOR DEFECTIVE PARTS OR MATERIAL MANUFACTURED BY DELUX MFG COMPANY WILL NOT BE ISSUED UNLESS STRICT COMPLIANCE IS GIVEN TO THE WARRANTY PARTS RETURN PROCEDURES LISTED BELOW. WHEN CONTACTING DELUX MFG COMPANY IN REGARD TO THE POLICIES

AND PROCEDURES SET FORTH IN THIS MANUAL, DIRECT ALL CORRESPONDENCE AND CALLS TO THE DEPARTMENT OF ENGINEERING AND SERVICE AT DELUX MFG COMPANY.

EXCEPT AS SPECIFIED PREVIOUSLY, REFER ALL WARRANTY CLAIMS TO YOUR DEALER.

WARRANTY PARTS RETURN AND CREDIT PROCEDURE:

1. DELUX MFG COMPANY MUST BE NOTIFIED BY WRITING OR PHONE WITHIN FIFTEEN(15) DAYS AFTER AN ALLEGED FAILURE OF A PART MANUFACTURED BY DELUX MFG COMPANY IS DISCOVERED. FAILURE TO GIVE SUCH NOTICE WITHIN THE TIME SPECIFIED SHALL BE DEEMED AN ADMISSION BY THE PURCHASER THAT THE PRODUCT IS AS REPRESENTED AND WARRANTED BY DELUX MFG COMPANY AND FREE FROM ALL DEFECTS AND DELUX MFG COMPANY SHALL BE RELEASED FROM ANY AND ALL CLAIMS ARISING OUT OF OR IN CONNECTION WITH THE SALE OF THE PART OR PRODUCT.

2. UPON NOTIFICATION FROM PURCHASER THAT A PART MANUFACTURED BY DELUX MFG COMPANY HAS ALLEGEDLY FAILED, THE FAILURE IS COVERED BY THE STANDARD LIMITED WARRANTY AND THE **ORIGINAL WARRANTY REGISTRATION CARD** IS ON FILE WITH DELUX MFG COMPANY AT ITS KEARNEY, NEBRASKA HEADQUARTERS, ARRANGEMENTS WILL BE MADE BY DELUX MFG COMPANY TO SHIP THE REPLACEMENT PART TO PURCHASER WITH FREIGHT CHARGED AT THE STANDARD GROUND SHIPPING RATE.

3. ONCE THE REPLACEMENT PART HAS BEEN SHIPPED, PURCHASER WILL RECEIVE AN INVOICE FOR THE VALUE OF THE EQUIPMENT SHIPPED PLUS THE SHIPPING CHARGES. PURCHASER MUST THEN FULLY COMPLETE A **RETURN PARTS TAG** IDENTIFYING THE ALLEGED PART FAILURE AND RETURN SAID TAG ALONG WITH THE ALLEGEDLY FAILED PART TO DELUX MFG COMPANY WITH FREIGHT PREPAID BY PURCHASER. NO WARRANTY CREDIT SHALL BE GIVEN TO PURCHASER ON ALLEGEDLY FAILED PARTS THAT ARE NOT RETURNED TO DELUX MFG COMPANY WITHIN THIRTY(30) DAYS FROM DATE OF THE DISCOVERY OF THE ALLEGED FAILURE OR WITHIN FIFTEEN(15) DAYS FROM THE SHIPPING DATE INDICATED UPON THE INVOICE SENT WITH THE REPLACEMENT PART, WHICHEVER DATE IS LATER. PURCHASER MUST USE PROPER PACKING MATERIAL TO ENSURE AGAINST DAMAGE DURING SHIPPING. ANY SHIPPING DAMAGE CAUSED BY IMPROPER PACKING IS NOT COVERED UNDER THE STANDARD LIMITED WARRANTY.

4. THE INVOICE FOR THE REPLACEMENT PART PLUS THE FREIGHT CHARGE REMAINS PAYABLE BY PURCHASER UNTIL SUCH TIME AS THE ALLEGEDLY FAILED PART HAS BEEN RETURNED WITH A COMPLETED RETURN PARTS TAG ATTACHED AND THE PART HAS BEEN INSPECTED BY DELUX MFG COMPANY TO DETERMINE IF THE WARRANTY CLAIM IS VALID. PURCHASER WILL THEN RECEIVE NOTIFICATION FROM DELUX MFG COMPANY AS TO THE RECEIPT OF THE DEFECTIVE PART AND DELUX MFG COMPANY'S FINDINGS ON THE WARRANTY CLAIM WITHIN A REASONABLE TIME THEREAFTER.

5. IF THE PART IS FOUND TO BE DEFECTIVE BY DELUX MFG COMPANY, DELUX MFG COMPANY SHALL CREDIT THE AMOUNT OWED UNDER THE INVOICE SENT WITH THE REPLACEMENT PART EXCEPT FOR THE FREIGHT INCURRED IN SHIPPING THE REPLACEMENT PART TO PURCHASER.

6. IF THE PART RETURNED BY PURCHASER IS FOUND BY DELUX MFG COMPANY TO BE FUNCTIONAL AND OPERATIONAL AND IN COMPLIANCE WITH THE MANUFACTURED SPECIFICATIONS, IT WILL BE RETURNED UPON REQUEST TO PURCHASER AT PURCHASER'S COST. IF NO REQUEST IS RECEIVED BY PURCHASER, THE PART SHALL BE DESTROYED AFTER A PERIOD OF TEN(10) DAYS. DELUX MFG

COMPANY'S CHARGES FOR INSPECTION OF A NON-DEFECTIVE DELUX MFG CO PART WILL BE SUBJECT TO THE STANDARD HOURLY RATE AND ZONE CHARGES.

7. NO NON-DELUX MFG COMPANY LABOR OR NON-DELUX MFG COMPANY REPLACEMENT PART WILL BE AUTHORIZED WITHOUT FIRST AN ESTIMATE OF THE COST OF PART AND LABOR PROVIDED TO DELUX MFG COMPANY. DEVIATIONS FROM THIS ESTIMATE WILL BE SOLELY AT THE PURCHASER OR DEALER'S COST.

F. **DELUX MFG COMPANY STANDARD LIMITED WARRANTY:**

DELUX MFG COMPANY'S WARRANTY OBLIGATIONS ARE LIMITED TO THE TERMS SET FORTH BELOW:

DELUX MFG COMPANY WARRANTS TO THE ORIGINAL PURCHASER THAT IF ANY PART MANUFACTURED BY DELUX MFG COMPANY IS PROVEN TO BE DEFECTIVE IN MATERIAL OR WORKMANSHIP WITHIN ONE(1) YEAR FROM DATE OF ORIGINAL INVOICE FROM DELUX MFG COMPANY AND PURCHASER FOLLOWS THE ABOVE WARRANTY PARTS AND CREDIT PROCEDURE, DELUX MFG COMPANY WILL, AT ITS OPTION, EITHER REPLACE OR REPAIR SAID PART AT ITS COST. THIS STANDARD LIMITED WARRANTY DOES NOT APPLY TO ANY DAMAGE RESULTING FROM NEGLIGENT USE, MISUSE, ACCIDENTAL DAMAGE, ABNORMAL OR UNUSUALLY HEAVY USE, NORMAL WEAR AND TEAR, NEGLECT, ABUSE, ALTERATION, IMPROPER INSTALLATION, UNAUTHORIZED REPAIR OR MODIFICATION, POOR OR IMPROPER MAINTENANCE OR USE BEYOND RATED CAPACITY.

THIS WARRANTY AND THE REMEDY SET FORTH ABOVE IS EXCLUSIVE AND IN LIEU OF ALL OTHERS, WHETHER ORAL OR WRITTEN, EXPRESSED, IMPLIED OR STATUTORY. DELUX MFG COMPANY SPECIFICALLY DISCLAIMS TO THE MAXIMUM EXTENT PERMITTED BY LAW ANY AND ALL IMPLIED WARRANTIES OR CONDITIONS AS TO THE PRODUCTS OR ANY OTHER MATTER WHATSOEVER. IN PARTICULAR, BUT WITHOUT LIMITATION, DELUX MFG COMPANY SPECIFICALLY DISCLAIMS ANY AND ALL IMPLIED WARRANTIES OR CONDITIONS OF SATISFACTORY QUALITY, MERCHANTABILITY, FITNESS FOR A PARTICULAR PURPOSE, DESCRIPTION, NON-INFRINGEMENT OF THIRD PARTY RIGHTS, ANY ADVICE, INSTRUCTION, RECOMMENDATION OR SUGGESTION PROVIDED BY AN AGENT, REPRESENTATIVE OR EMPLOYEE OF DELUX MFG COMPANY REGARDING OR RELATED TO THE CONFIGURATION, INSTALLATION, LAYOUT, SUITABILITY FOR A PARTICULAR PURPOSE, OR DESIGN OF SUCH PRODUCT OR PRODUCTS, OR ANY OTHER WARRANTY ARISING FROM A COURSE OF DEALING OR USAGE OF TRADE. DELUX MFG COMPANY RESERVES THE RIGHT TO MAKE DESIGN OR SPECIFICATION CHANGES AT ANY TIME.
THIS STANDARD LIMITED WARRANTY DOES NOT APPLY TO, AND DELUX MFG COMPANY MAKES NO WARRANTY TO THE PURCHASER WITH REGARD TO, PARTS AND PRODUCTS NOT MANUFACTURED BY DELUX MFG COMPANY. IN THE EVENT AND TO THE EXTENT THAT APPLICABLE LAW DOES NOT ALLOW THE EXCLUSION OF IMPLIED WARRANTIES, THE ABOVE EXCLUSION WITH REGARD TO IMPLIED WARRANTIES MAY NOT APPLY.

DELUX MFG COMPANY SHALL NOT BE RESPONSIBLE OR LIABLE FOR ANY LOST PROFITS, DIRECT, INDIRECT, UNFORSEEABLE, SPECIAL, INCIDENTAL OR CONSEQUENTIAL DAMAGES HOWEVER CAUSED AND WHETHER OR NOT DELUX MFG COMPANY WAS ADVISED OF THE POSSIBILITY OF SUCH DAMAGES, WHETHER BASED ON CONTRACT, IN TORT OR ANY OTHER LEGAL THEORY. THE REMEDY STATED HEREIN SHALL BE THE SOLE AND EXCLUSIVE REMEDY AVAILABLE UNDER THIS WARRANTY.

DELUX MFG COMPANY ASSUMES NO RESPONSIBILITY FOR FIELD MODIFICATIONS OR ERECTION DEFECTS WHICH CREATE STRUCTURAL OR STORAGE QUALITY PROBLEMS, MODIFICATIONS TO THE PRODUCT NOT SPECIFICALLY COVERED BY THE CONTENTS OF THE DELUX MFG COMPANY SERVICE MANUAL WILL NULLIFY ANY PRODUCT WARRANTY THAT MIGHT HAVE BEEN AVAILABLE OTHERWISE.

NO DELUX MFG COMPANY DISTRIBUTOR, RESELLER, DEALER, AGENT OR EMPLOYEE IS AUTHORIZED

**TO MAKE ANY MODIFICATIONS, EXTENSION OR ADDITION TO THIS WARRANTY. DELUX MFG COMPANY SHALL NOT BE RESPONSIBLE FOR ANY CHARGES INCURRED IN THE REPAIRING OR SERVICING OF
ANY DELUX MFG COMPANY PRODUCT OR PART EXCEPT AS SUCH REPAIRS ARE MADE BY AUTHORIZED DELUX MFG COMPANY FIELD SERVICE PERSONNEL OR AS APPROVED IN WRITING FROM DELUX MFG COMPANY.**

**PRIOR TO INSTALLATION, PURCHASER IS RESPONSIBLE FOR RESEARCHING AND COMPLYING WITH
ALL FEDERAL, STATE AND LOCAL STATUTES, REGULATIONS AND/OR CODES WHICH MIGHT APPLY TO THE LOCATION AND INSTALLATION OF THE DELUX MFG COMPANY PRODUCT.**

ADDITIONAL DISCLAIMER OF WARRANTY:

ALL MANUFACTURER LABEL PRODUCTS NOT MANUFACTURED BY DELUX MFG COMPANY ARE EXCLUDED FROM COVERAGE UNDER THE DELUX MFG COMPANY STANDARD LIMITED WARRANTY.

NO ELECTRIC MOTOR WARRANTY:

DELUX MFG COMPANY'S STANDARD LIMITED WARRANTY DOES NOT COVER ANY AND ALL ELECTRIC MOTORS USED BY DELUX MFG COMPANY IN ITS PRODUCTS. PURCHASER'S SOLE CLAIM FOR WARRANTY ON THESE ELECTRIC MOTORS LIES WITH THE MOTOR'S MANUFACTURES. IN SUCH EVENT, PURCHASER'S DRYER SERVICE MANUAL CONTAINS A LIST OF THE MOTOR MANUFACTURE'S SERVICE CENTERS WHERE ALL FURTHER INQUIRIES REGARDING THE MOTOR AND ITS WARRANTY SHOULD BE PLACED. UNDER NO CIRCUMSTANCES WHATSOEVER WILL DELUX MFG COMPANY BE LIABLE FOR AN UNAUTHORIZED ELECTRIC MOTOR REPAIR BY A LOCAL MOTOR SHOP OR ELECTRICIAN.

RETURN MERCHANDISE PROCEDURES:

1. CALL OR WRITE: PHONE: 308-237-2274 TOLL FREE: 800-658-3240
   FAX: 308-234-3765 WEB: http://www.deluxmfg.com

   DELUX MFG COMPANY
   4650 AIRPORT ROAD
   P.O. BOX 1027
   KEARNEY, NE 68848-1027

   ASK FOR A **RETURN PARTS TAG**. IN THAT REQUEST IDENTIFY THE MERCHANDISE YOU WISH TO RETURN, ITS CONDITION AND THE INVOICE ON WHICH IT WAS ORGINALLY BILLED.

2. AFTER RECEIPT OF THE RETURN PARTS TAG, SHIP THE ITEM(S) WITH PREPAID FREIGHT ALONG WITH THE RETURN PARTS TAG TO DELUX MFG. COMPANY. A 15% RESTOCKING FEE WILL BE CHARGED ON ALL MERCHANDISE RETURNED THIRTY (30) DAYS AFTER THE ORIGINAL DATE OF PURCHASE.

3. ONCE THE MERCHANDISE HAS BEEN RECEIVED AND INSPECTED BY DELUX MFG. COMPANY, IF APPROPRIATE A CREDIT WILL BE ISSUED TO YOUR ACCOUNT.

4. ANY MERCHANDISE RETURNED THAT HAS BEEN USED OR ABUSED WILL NOT RECEIVE A CREDIT TO YOUR ACCOUNT. SHIPMENTS OF INCORRECT MERCHANDISE DUE TO MIS-ORDERING BY THE PURCHASER ARE ALSO SUBJECT TO A 15% RESTOCKING FEE.

OUT OF WARRANTY SERVICE:

DRYERS REQUIRING DELUX MFG COMPANY REPAIR WORK WILL BE REPAIRED AT THE STANDARD SERVICE CHARGES (HOURLY LABOR CHARGE, TRIP CHARGE (INCLUDES COST OF LODGING, MEALS, AND MILEAGE COSTS), PLUS PARTS). THE REPAIRED PARTS WILL CARRY A THIRTY(30) DAY LIMITED WARRANTY. THE SAME EXCLUSIONS AND LIMITATIONS OF THE DELUX MFG COMPANY STANDARD LIMITED WARRANTY POLICY REFERENCED ABOVE ALSO APPLY TO THIS THIRTY(30) DAY LIMITED WARRANTY. REFER TO THE TABLE OF CONTENTS FOR LOCATION OF THE PRESEASON AND REGULAR SEASON RATE CHARGES.

TERMS:

DELUX DRYERS REQUIRING SERVICE FOR CUSTOMERS WHO HAVE AN ESTABLISHED LINE OF CREDIT WILL BE INVOICED FOR SERVICES RENDERED. CUSTOMERS NOT HAVING AN ESTABLISHED LINE OF CREDIT WILL BE ON A CASH IN ADVANCE OR CASH ON COMPLETION OF SERVICE. ALL SERVICE OR REPAIR WORK RENDERED BY AUTHORIZED DELUX SERVICE PERSONNEL MUST BE INVOICED THROUGH AN EXISTING AUTHORIZED DELUX MFG COMPANY DEALER.

GRAIN DRYER PERFORMANCE CHART
CHART # 1

DRYING CAPACITY WET
BPH PER 1000 BPH-RATED
CAPACITY ON YELLOW CORN

	MOISTURE OF DRIED GRAIN %								
IN	**10**	**11**	**12**	**13**	**14**	**15**	**16**	**17**	**18**
13	870	1200	1900	-	-	-	-	-	-
14	740	930	1250	-	-	-	-	-	-
15	640	780	1000	1550	-	-	-	-	-
16	550	690	850	1200	1900	-	-	-	-
17	500	600	730	960	1400	-	-	-	-
18	450	530	650	800	1100	1600	-	-	-
19	410	480	570	710	910	1250	1800	-	-
20	380	440	510	630	770	1000	1350	1900	-
21	360	410	480	560	690	880	1100	1450	1900
22	340	380	440	510	620	760	920	1150	1450
23	320	360	410	470	560	680	800	1000	1200
24	300	340	390	440	510	610	720	850	1000
25	-	320	370	410	480	560	640	740	870
26	-	-	350	390	440	510	590	670	770
27	-	-	340	370	420	480	540	610	700
28	-	-	320	360	400	450	500	570	630
29	-	-	-	350	390	430	480	530	590
30	-	-	-	340	380	420	460	510	560

PLENUM TEMP	**F2**	**WET GRAIN TEMP**	**F3**	**GRAIN**	**F4**
140 F	.46	20 F	.74	CORN	1.0
150 F	.50	30 F	.78	SOYBEANS	1.0
160 F	.55	40 F	.82	MILO	.9
170 F	.61	50 F	.86	WHEAT	.8
180 F	.69	60 F	.91		
190 F	.77	70 F	1.00		
200 F	.88				
210 F	1.00				

HOW TO USE CHARTS TO FIGURE YOUR CAPACITY

$$\frac{\text{(DRYER RATED CAPACITY @ 20-15\%)}}{1000} \times \text{(BPH IN CHART 1)} \times F2 \times F3 \times F4$$

GRAIN SHRINKAGE TABLE

SHRINKAGE WHEN GRAIN IS DRIED TO THESE LEVELS

INITIAL MOISTURE	12.0	12.5%	13.0%	13.5%	14.0%	14.5%	15.0%	15.5%	16.0%	16.5%	17.0%	17.5%	18.0%	18.5%	19.0%
PERCENT	(PERCENT OF SHRINKAGE)														
15.5	4.48	3.93	3.37	2.81	2.24	1.67	1.09	-	-	-	-	-	-	-	-
16.0	5.05	4.50	3.95	3.39	2.83	2.25	1.68	1.09	-	-	-	-	-	-	-
16.5	5.61	5.07	4.52	3.97	3.41	2.84	2.26	1.68	1.10	-	-	-	-	-	-
17.0	6.18	5.64	5.10	4.55	3.99	3.42	2.85	2.28	1.70	1.10	-	-	-	-	-
17.5	6.75	6.21	5.67	5.12	4.57	4.01	3.44	2.87	2.29	1.70	1.11	-	-	-	-
18.0	7.32	6.79	6.25	5.70	5.15	4.59	4.03	3.46	2.88	2.30	1.71	1.11	-	-	-
18.5	7.89	7.36	6.82	6.28	5.73	5.18	4.62	4.05	3.48	3.48	2.31	1.72	1.11	-	-
19.0	8.45	7.95	7.40	6.86	6.31	5.76	5.21	4.64	4.08	4.08	2.91	2.32	1.72	1.12	-
19.5	9.02	8.50	7.97	7.44	6.90	6.35	5.79	5.23	4.67	4.67	3.52	2.93	2.33	1.73	1.12
20.0	9.59	9.07	8.55	8.01	7.48	6.93	6.38	5.83	5.27	5.27	4.12	3.54	2.94	2.35	1.74
20.5	10.16	9.64	9.12	8.59	8.06	7.52	6.97	6.42	5.86	5.30	4.72	4.14	3.55	2.96	2.36
21.0	10.73	10.24	9.70	9.17	8.64	8.10	7.56	7.01	6.46	5.89	5.32	4.75	4.16	3.57	2.97
21.5	11.30	10.79	10.27	9.75	9.22	8.69	8.15	7.60	7.05	6.49	5.93	5.35	4.77	4.19	3.59
22.0	11.86	11.362	10.84	10.33	9.80	9.27	8.74	8.19	7.63	7.09	6.53	5.96	5.38	4.80	4.21
22.5	12.43	11.93	11.42	10.90	10.38	9.86	9.32	8.78	8.24	7.69	7.13	6.57	5.99	5.40	4.83
23.0	13.00	12.50	11.99	11.48	10.97	10.44	9.91	9.38	8.84	8.29	7.73	7.17	6.60	6.03	5.44
23.5	13.57	13.07	12.57	12.06	11.55	11.03	10.50	9.97	9.43	8.89	8.34	7.78	7.21	6.64	6.06
24.0	14.14	13.64	13.14	12.64	12.13	11.61	11.09	10.56	10.03	9.49	8.94	8.38	7.82	7.25	6.68
24.5	14.701	14.21	13.72	13.22	12.71	12.20	11.68	11.15	10.62	10.09	9.54	8.99	8.43	7.87	7.30
25.0	5.28	14.79	14.29	13.79	13.29	12.78	12.26	11.74	11.22	10.68	10.14	9.60	9.04	8.48	7.91
25.5	15.84	15.35	14.87	14.37	13.87	13.37	12.85	12.33	11.81	11.28	10.75	10.20	9.65	9.09	8.53
26.0	16.41	15.93	15.44	14.95	14.45	13.95	13.44	12.93	12.41	11.88	11.35	10.81	10.26	9.71	9.15
26.5	16.98	16.50	16.02	15.53	15.03	14.54	14.03	13.52	13.00	12.48	11.95	11.41	10.87	10.32	9.76
27.0	17.55	17.07	16.60	16.11	15.62	15.12	14.62	14.11	13.60	13.08	12.55	12.02	11.48	10.93	10.38
27.5	18.11	17.64	17.17	16.69	16.20	15.71	15.21	14.71	14.20	13.68	13.16	12.63	12.09	11.55	11.00
28.0	18.68	18.21	17.74	17.26	16.78	16.29	15.79	15.29	14.79	14.27	13.75	13.23	12.70	12.16	11.61
28.5	19.25	18.79	18.32	17.84	17.36	16.87	16.38	15.88	15.38	14.87	14.36	13.83	13.30	12.77	12.23
29.0	19.82	19.36	18.89	18.42	17.94	17.46	16.97	16.48	15.98	15.47	14.96	14.44	13.91	13.38	12.85
29.5	20.39	19.93	19.47	19.00	18.52	18.04	17.56	17.07	16.57	16.07	15.56	15.05	14.52	14.00	13.46
30.0	20.95	20.50	20.04	19.58	19.10	18.63	18.15	17.66	17.17	16.67	16.16	15.65	15.13	14.61	14.08

FORMULAS (1) $\text{SHRINKAGE} = \frac{(100\% - \%\ \text{DRY MATTER IN WET GRAIN})}{(100\% - \%\ \text{DRY MATTER IN DRY GRAIN} \times 100) + .05\%\ \text{HANDLING SHRINK}}$

(2) VALUE OF SHRINK = PRICE BASIS GRADE X SHRINKAG

(3) RETURNS TO DRYING = DISCOUNT - VALUE OF SHRINKAGE

DRYER OPERATING LOG

DATE_____

PAGE_____OF_____

DRYER_____

ELEVATOR_____LOCATION_____

GRAIN_____REMARKS, CONDITION OR GRADE_____

TIME OF DAY	AIR TEMPERATURES, F AMBIENT DRYING VOLT	WET GRAIN %MOISTURE	DRY GRAIN TEMP %MOISTURE	MOISTURE REMOVED
AVERAGES:				

SUMMARY (USE ONE OR MORE PAGES FOR A BIN, A SHIPMENT, OR A TOTAL RUN)

GRAIN DESTINATION_____TOTAL WET GRAIN DRIED_____BU.

FINAL MOISTURE_____& TEMP._____F AVG. DRYING CAPACITY_____BU/HR.

WET GRAIN_____,F.M._____% TOTAL FUEL COST $_____

DRY GRAIN GRADE_____,F.M._____% AVG. FUEL COST BU. $_____

INSTALLATION

THE DRYER IS DESIGNED FOR MINIMAL FIELD ERECTION TIME. THE DRYER IS SHIPPED TOTALLY ASSEMBLED **WITHOUT** GARNER BIN. ONLY THE ASSEMBLY AND INSTALLATION OF GARNER BIN, COMPLETION OF ELECTRICAL POWER SOURCE TO MAIN PANEL, AND HOOK-UP OF THE FUEL SYSTEM TO THE PLUMBING TRAIN INLET ARE NEEDED. **THE FOLLOWING INSTRUCTIONS ARE SUGGESTED FOR THE SAFEST AND FASTEST WAY TO COMPLETE THE INSTALLATION.**

A. BEFORE DELIVERY

1. **SITE SELECTION**: **THE DRYER *IS NOT TO BE* OPERATED INSIDE A BUILDING OR ENCLOSURE. SUFFICIENT AREA AROUND THE DRYER** MUST BE MAINTAINED TO ALLOW ADEQUATE AIR FLOW TO SUPPLY THE DRYER AND TO ALLOW EXHAUSTED AIR TO ESCAPE FREELY TO ATMOSPHERE. **DO NOT OPERATE DRYER IN AN AREA WHERE COMBUSTIBLE MATERIALS CAN BE DRAWN INTO THE FANS.** ALSO CONSIDER THE GRAIN HANDLING SYSTEMS AND THE LOCATIONS OF STORAGE BINS AND EXISTING CONVEYORS IN SELECTING THE DRYER SITE. REFER TO BACK PAGE OF BROCHURE FOR GENERAL DIMENSIONS AND SPECIFICATIONS.

2. **SUPPLY AND TAKE AWAY SYSTEMS** SUCH AS FILL AUGER AND UNLOAD AUGERS SHOULD BE OF SUFFICIENT CAPACITY TO HANDLE MAXIMUM LOAD AND UNLOAD REQUIREMENTS OF EACH DRYER. (APPROXIMATELY TWO(2) TIMES EACH DRYER'S RATED CAPACITY, BASED ON FIVE(5) POINT MOISTURE REMOVAL IS RECOMMENDED.)

3. **DRYER IS TO BE SET PERMANENTLY**, IT IS SUGGESTED THAT A REINFORCED CONCRETE PAD BE POURED FOR DRYER TO SET ON. **ANCHOR BOLTS SHOULD BE INCLUDED IN FOUNDATION PLANS.** BE SURE TO LEVEL DRYER BEFORE SECURING WITH THE ANCHOR BOLTS. REFER TO PERMANENT FOUNDATION LAYOUT DRAWINGS.

IMPORTANT: DRYER MUST BE LEVEL BOTH LENGTHWISE AND CROSSWISE AT ALL TIMES DURING THE DRYING PROCESS OR DAMAGE TO THE DRYER WILL RESULT.

4. IF DRYER IS TO BE SET FOR A **TEMPORARY PERIOD** OF TIME WITH THE TRAILER ATTACHED, DRYER MUST BE "JACKED-UP" SO THAT NO WEIGHT IS RESTING ON TRAILER WHEELS. USING CONCRETE BLOCKS AND 2" X 8" PLANKS, BLOCK UP UNDER DRYER FRAME AS REQUIRED WITH THE PERMANENT FOUNDATION.

5. **CONSULT YOUR LOCAL ELECTRICAL POWER COMPANY FOR PROPER TRANSFORMER SIZING. CONSULT WITH YOUR LOCAL ELECTRICIAN FOR INSTALLATION OF ELECTRICAL SERVICE.** REFER TO FIGURES IN SECTION FIVE(5) FOR THE PROPER TRANSFORMER AND SERVICE SIZING.

6. **CONSULT YOUR PROPANE OR NATURAL GAS SERVICE SUPPLIER FOR LOCATING AND SIZING TANK, METERS AND REGULATORS.**

B. SET-UP

1. POSITION DRYER IN SELECTED LOCATION, LEVEL AND SECURE.

2. MAKE SURE ALL BOLTS AND SCREWS ARE IN PLACE AND TIGHT. MAKE SURE METERING ROLLS AND AUGERS ARE FREE OF ANY FOREIGN MATERIAL.

3. ASSEMBLE GARNER BIN PARTS, REFER TO DRAWING FOR PROPER PART ASSEMBLY. GARNER BIN CAN BE ASSEMBLED ON THE GROUND AND HOISTED TO THE TOP OF THE DRYER, OR IT CAN BE ASSEMBLED PIECE BY PIECE ON TOP OF THE DRYER. A HOLE IS PROVIDED IN THE ROOF SECTION OF THE GARNER BIN FOR FILL SPOUTING

ATTACHMENT. THE HINGED DOOR IN THE TOP OF THE GARNER BIN ALLOWS ACCESS TO AUGER BEARINGS AND HANGERS FOR ASSEMBLY AND REPAIR.

4. **INSTALL CATWALK RAILINGS AS SHOWN ON DRAWING**.

5. INSTALL MOTOR AND CONDUIT ASS'Y PLUS HOOK-UP OF HIGH GRAIN SHUTDOWN ASS'Y LOCATED ON THE TOP ROOF SECTION. ATTACH ELECTRICAL WIRING PER DRAWING. (NOTE: MERCURY SWITCH ADJUSTMENT FOR PROPER OPERATION MUST BE DONE AT THE TIME OF INITIAL FILLING).

C. ELECTRICAL

1. **POWER SUPPLY** - AN ADEQUATE POWER SUPPLY AND PROPER WIRING ARE IMPORTANT FACTORS FOR MAXIMUM PERFORMANCE AND LONG DRYER LIFE. ELECTRICAL SERVICE MUST BE OF ADEQUATE SIZE TO PREVENT LOW VOLTAGE DAMAGE TO MOTORS AND CONTROL CIRCUITS.

NOTE: ALL MOTORS ARE EQUIPPED FOR 240V OR 480V THREE (3), PHASE OPERATION. WHEN 230V SINGLE PHASE POWER IS ONLY AVAILABLE, A PHASE CONVERTER MUST BE INSTALLED AHEAD OF DRYER TO OBTAIN THREE (3) PHASE POWER.

2. **POWER SUPPLY DISCONNECT - ALL DRYERS SHOULD BE EQUIPPED WITH A POWER DISCONNECT SWITCH AHEAD OF DRYER CONTROL BOX TO PERMIT TOTAL POWER SHUT DOWN BEFORE OPENING CONTROL BOX, AS REQUIRED FOR INSPECTION AND SERVICE. THE POWER DISCONNECT SWITCH SHOULD ALSO BE LOCATED CLOSE TO THE DRYER FOR QUICK SHUT DOWN.**

3. **TRANSFORMER, WIRING AND VOLTAGE DROP** - REFER TO FIGURES IN SECTION FIVE (5) FOR PROPER TRANSFORMER AND ELECTRICAL SERVICE SIZING. THE POWER SUPPLY WIRING, MAIN SWITCH EQUIPMENT, AND TRANSFORMERS MUST BE CAPABLE OF PROVIDING ADEQUATE MOTOR STARTING AND OPERATING VOLTAGE. VOLTAGE DROP DURING MOTOR STARTING SHOULD NOT EXCEED 7% TO 8% OF NORMAL VOLTAGE AND RUNNING VOLTAGE SHOULD BE WITHIN 6% OF NORMAL VOLTAGE.

4. **ELECTRICAL PHASING** - FOR YOUR CONVENIENCE YOUR DRYER HAS HAD ALL MOTORS PHASED. **IF ONE MOTOR RUNS BACKWARDS, THEY ALL WILL.** SIMPLY CHANGE THE TWO MAIN WIRE LEADS AROUND AT MAIN TERMINAL CONNECTION BLOCK FOR PROPER ROTATION. **(NOTE: CONTROL DESIGN REQUIRES WILD LEG TO BE CONNECTED TO TERMINAL "L2"). WILD LEG "L2" SINCE 1996**

5. **CONNECTING AUXILIARY CONVEYORS** - AUXILIARY STARTING EQUIPMENT IS SUPPLIED AS STANDARD EQUIPMENT. REFER TO DRAWING FOR PROPERLY CONNECTING AND INTERLOCKING WET LOADING AND DRY UNLOADING AUXILIARY STARTING EQUIPMENT LOCATED IN THE ELECTRICAL CONTROL PANEL. (AUXILIARY STARTERS ARE SUPPLIED WITH 7 1/2 HP HEATER ELEMENTS. FOR OTHER HORSEPOWER REQUIREMENTS, HEATER ELEMENTS AND FUSES WILL HAVE TO BE CHANGED).

6. **IMPORTANT:**

   1. **MAKE SURE DRYER IS PROPERLY GROUNDED.** GROUND LUG IS PROVIDED.
   2. **HAVE THE POWER COMPANY OR YOUR LOCAL ELECTRICIAN CHECK LINE VOLTAGE AND AMPERAGE.** MAKE SURE VOLTAGE DROP IS MINIMUM.

ELECTRICAL SERVICE SIZE
DP MODELS

DP MODELS	VOLT	AMP SERVICE REQ'D	DRYER AMP	MAX AMP WIRE	DIM Z BASED ON 2% - V DROP 100	150	200	300	400	500
3015	240-3P	100	51.0	60	6	4	3	1	0	0
3015	480-3P	100	28.2	30	12	10	8	6	6	4
4025	240-3P	100	83.8	90	4	2	1	0	0	4/0
4025	480-3P	100	44.6	50	10	8	6	4	4	3
6030	240-3P	100	99.8	100	4	2	1	0	0	4/0
6030	480-3P	100	52.6	60	8	6	6	4	3	2
7550	240-3P	200	157.8	175	1	0	0	4/0	300	350
7550	480-3P	100	81.6	90	6	6	4	2	1	1
9045	240-3P	200	147.8	150	2	0	00	4/0	250	300
9045	480-3P	100	76.6	80	8	6	4	3	2	1
12060	240-3P	200	198.6	200	1	00	000	250	350	400
12060	480-3P	200	101.8	115	6	4	3	1	0	00

NOTE: **AMPERAGE OF SERVICE REQUIRED**, AND WIRE SIZE STATED IN CHART DO NOT INCLUDE AUXILIARY EQUIPMENT. **(CHECK WITH YOUR LOCAL ELECTRICIAN AND/OR POWER COMPANY).**

COPPER WIRE SIZE SHOWN

NOTE: FOR ALUMINUM WIRE SIZE, USE ONE SIZE LARGER THAN STATED ABOVE.

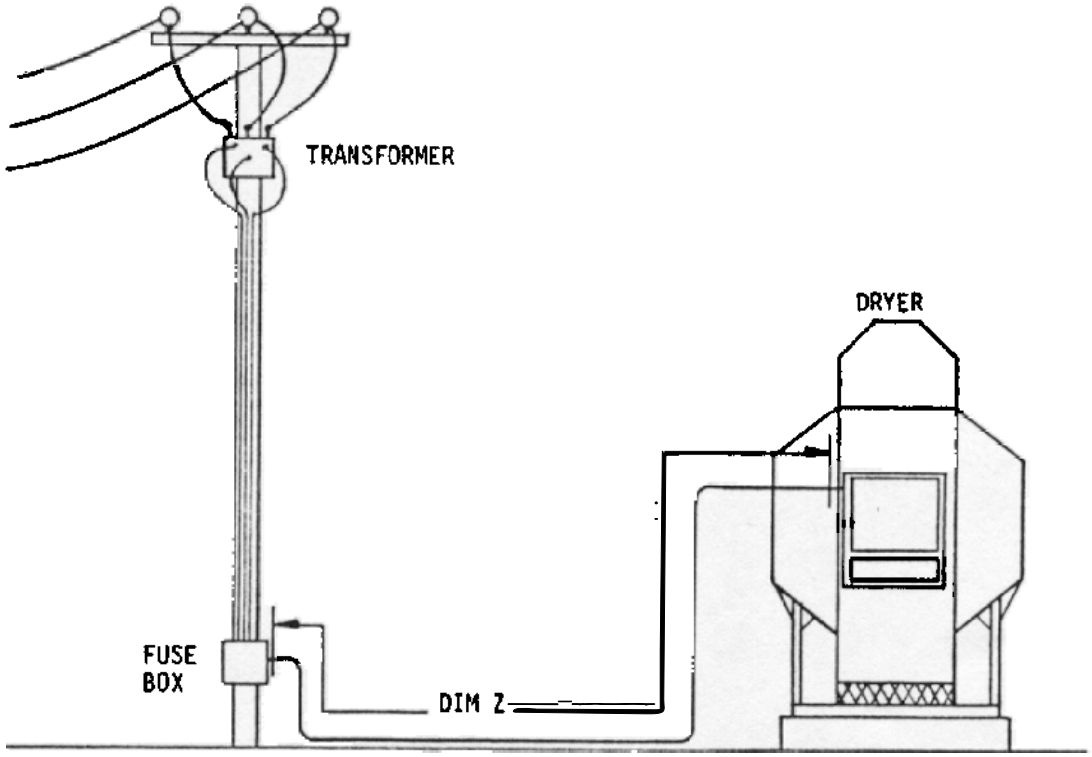

FIGURE 5-A

ELECTRICAL SERVICE SIZE
DPSL MODELS

DPSL MODELS	VOLT	AMP SERVICE REQ'D	DRYER AMP	MAX AMP WIRE	DIM Z BASED ON 2% - V DROP 100	150	200	300	400	500
3520	240-3P	100	63.0	70	4	4	2	1	00	000
3520	480-3P	100	34.2	35	10	10	8	6	4	4
4530	240-3P	100	95.8	100	4	2	1	00	000	4/0
4530	480-3P	100	50.6	60	8	6	6	4	3	2
7040	240-3P	200	123.8	130	3	1	0	000	4/0	300
7040	480-3P	100	64.6	70	8	6	4	4	2	1
8560	240-3P	200	181.8	200	1	00	000	250	350	400
8560	480-3P	100	93.6	100	6	4	4	2	1	0
10560	240-3P	200	183.8	200	1	00	000	250	350	400
10565	480-3P	100	94.6	100	6	4	4	2	1	0
14080	240-3P	400	246.2	250	0	000	4/0	300	400	500
14080	480-3P	200	125.8	130	6	4	3	1	0	00

NOTE: **REQUIRED (KVA)**, AMPERAGE OF SERVICE REQUIRED, AND WIRE SIZE STATED IN CHART DO NOT INCLUDE AUXILIARY EQUIPMENT. **(CHECK WITH YOUR LOCAL ELECTRICIAN AND/OR POWER COMPANY).**

COPPER WIRE SIZE SHOWN

NOTE: **FOR ALUMINUM WIRE SIZE**, USE ONE SIZE LARGER THAN STATED ABOVE.

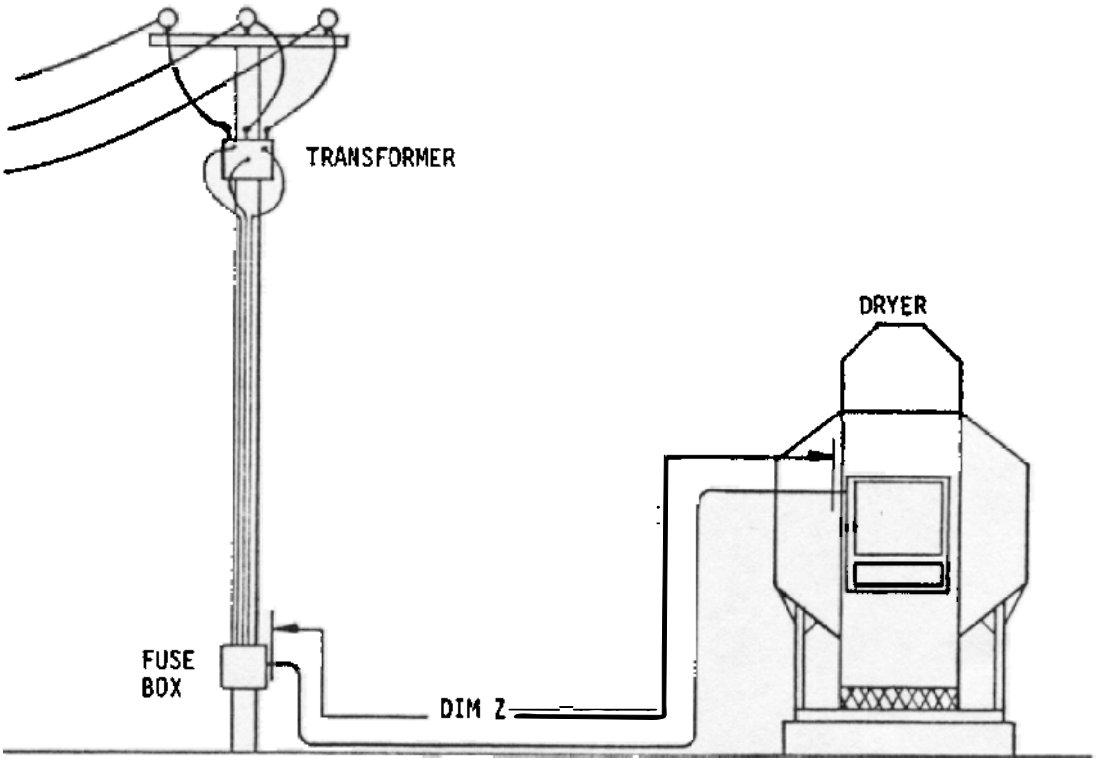

FIGURE 5-A

PROPER WIRING SIZE FOR CONVERTER SYSTEM

THE SUCCESS OF PHASE-O-MATIC'S OPERATION DEPENDS UPON PROPER WIRE SIZE. THIS IS ESPECIALLY TRUE OF ALL SINGLE PHASE WIRING FROM THE UTILITY TRANSFORMER TO THE THREE PHASE MOTORS ON L1 AND L2. NORMAL THREE PHASE CALCULATIONS CANNOT BE USED BECAUSE THE POWER SOURCE IS SINGLE PHASE AND THE LINE AMPERAGE DRAW WILL BE ABOUT 1.7 TIMES HIGHER THAN THE THREE PHASE MOTOR RATINGS. THERE IS A DEFINITE NEED FOR LARGER WIRE WHEN STARTING HEAVY THREE PHASE LOADS, BECAUSE ONLY A 7 TO 8% VOLTAGE DROP BELOW MOTOR RATINGS CAN BE TOLERATED. CHECK THE NAME PLATE FULL LOAD AMPERAGE AND USE 1 1/2 TIMES LARGER WIRE THAN SHOWN IN A REGULAR THREE PHASE MOTOR TABLE TO PREVENT EXCESSIVE VOLTAGE DROP ON MOTOR STARTS. THE CHART BELOW HAS BEEN DESIGNED TO HELP YOU CHOOSE THE CORRECT WIRE SIZE.

CONVERTER SIZE	VOLTAGE	WIRE SIZE 'X' COPPER	WIRE SIZE 'Y' COPPER
RT 10	240V-3P	SEE NOTE 1	1
RT 15	240V-3P	SEE NOTE 1	3/0
RT 20	240V-3P	SEE NOTE 1	4/0
RT 25	240V-3P	SEE NOTE 1	350 MCM
RT 30	240V-3P	SEE NOTE 1	400
RT 40	240V-3P	SEE NOTE 1	700
RT 50	240V-3P	SEE NOTE 1	2-300
RT 60	240V-3P	SEE NOTE 1	2-400

NOTE: 1. **SIZE WIRE PER NEC** BASED ON ALL FACTORS INCLUDING DRYER MOTORS, AUXILLARY EQUIPMENT AND DISTANCE FROM CONVERTER.

2. CHART IS CALCULATED FOR A REASONABLE VOLTAGE DROP ON MOTOR START AND BASED ON A 100 FT. MAXIMUM DISTANCE. WIRE IN ACCORDANCE WITH **NATIONAL ELECTRICAL CODE** FOR DISTANCES OVER 100FT AND FOR USE WITH ALUMINUM WIRE.

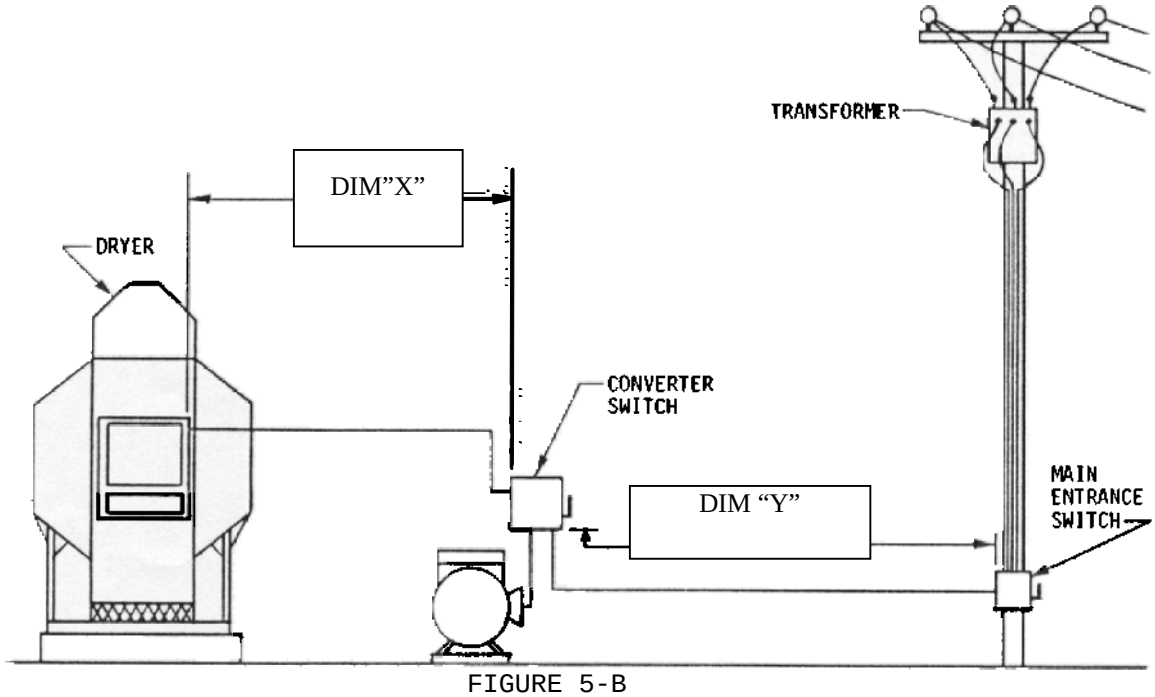

FIGURE 5-B

D. **FUEL CONNECTION (DP) DRYERS**

THE DRYER IS DESIGNED TO OPERATE ON LIQUID PROPANE OR NATURAL GAS. FUEL CONNECTIONS SHOULD BE CONNECTED AS PER FIGURES 5C, 5CA, 5D AND 5DA. LOCATE FUEL TANK AND PLUMBING SO THAT PLUMBING WILL NOT BE DAMAGED BY GRAIN HANDLING EQUIPMENT. **ALL PLUMBING CONNECTIONS SHOULD BE IN ACCORDANCE WITH NFPA PAMPHLET #58. CHECK ALL GAS CONNECTIONS ON DRYER FOR LEAKS BEFORE STARTING DRYING OPERATION.**

1. **LIQUID PROPANE (LP)**– **DP DRYERS** WITH INTERNAL VAPORIZER
AVERAGE PROPANE ORIFICE SIZE 9/32" TO 23/64" I.D.

DRYER MUST BE STARTED ON VAPOR UNTIL INTERNAL VAPORIZER IS WARM, THEN SWITCH TO LIQUID. TANK MUST HAVE BOTH VAPOR AND LIQUID DRAW AVAILABLE TO DRYER.

NOTE: OCCASIONALLY CONDITIONS MAY EXIST THAT REQUIRES ORIFICE SIZE TO BE MODIFIED.

THE DRYER IS DESIGNED TO OPERATE ON LIQUID PROPANE WITH LIQUID DRAW FROM A SUPPLY TANK. A PLUMBING SYSTEM IS PROVIDED ON THE DRYER WHICH INCLUDES: MANUAL SHUT-OFF VALVE, LINE STRAINER, PRESSURE RELIEF VALVES, ELECTRIC OPERATED LIQUID AND VAPOR SOLENOID VALVE, HI VAPOR CUTOUT TUBE VAPORIZER, PRESSURE REGULATOR, MODULATING VALVE AND BURNER. THE DRYER SHOULD BE SUPPLIED WITH 12 POUNDS OF WORKING PRESSURE AT DRYER BASE.

2. **SUPPLY TANK**

DO NOT USE PROPANE SUPPLY TANKS THAT HAVE PREVIOUSLY CONTAINED AMMONIA OR FERTILIZER SOLUTIONS. THESE SUBSTANCES ARE **EXTREMELY CORROSIVE** AND DAMAGING TO THE FUEL SUPPLY AND BURNER PARTS.

WITH LIQUID DRAW FROM THE SUPPLY TANK, ANY WATER PRESENT IN THE TANK MAY FREEZE IN THE PIPING AND CONTROLS IN COLD WEATHER. TO INSURE THAT TANKS ARE FREE OF MOISTURE, THE USUAL PRECAUTION IS TO PURGE WITH METHANOL. AVOID THE TANK THAT MAY CONTAIN ACCUMULATIONS OF OIL OR HEAVY HYDROCARBONS FROM LONG USE IN A VAPOR WITHDRAWAL SYSTEM.

PROPANE SUPPLY TANK RECOMMENDED MINIMUM OF 1000 GAL. CONNECTED FOR LIQUID DRAW.

DRYER MUST BE STARTED ON VAPOR UNTIL INTERNAL VAPORIZER IS WARM, THEN SWITCH TO LIQUID. TANK MUST HAVE BOTH VAPOR AND LIQUID DRAW AVAILABLE TO DRYER.

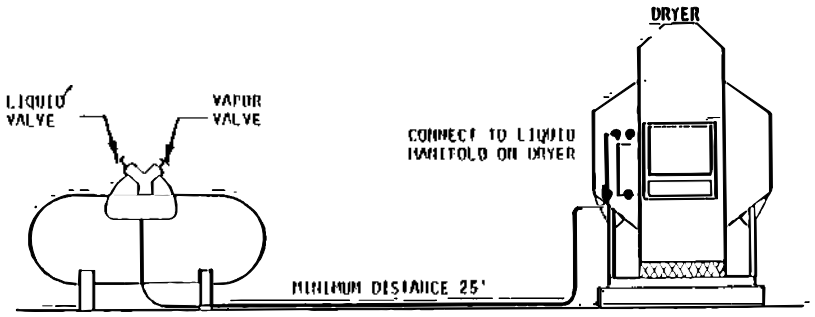

MODEL (DP)	10FT 3015	15FT 4025	20FT 6030	25FT 7550	30FT 9045	40FT 12060
ML/BTU/HR @10F	2.76	3.49	5.52	6.98	8.28	11.04
GAL/HR.	30	32	60	76	90	120
LINE SIZE I.D.	1/2"	1/2"	1/2"	5/8"	3/4"	1"
ORIFICE DIA.	1-9/32"	1-11/32"	2-9/32"	2-11/32"	3-9/32"	4-9/32"
OPERATING PSI	10-20	10-20	10-20	10-20	10-20	10-20

FIGURE 5-C LIQUID PROPANE (LP) FUEL SYSTEM

D. **FUEL CONNECTION (DPSL) DRYERS**

THE DRYER IS DESIGNED TO OPERATE ON LIQUID PROPANE OR NATURAL GAS. FUEL CONNECTIONS SHOULD BE CONNECTED AS PER FIGURES 5C, 5CA, 5D AND 5DA. LOCATE FUEL TANK AND PLUMBING SO THAT PLUMBING WILL NOT BE DAMAGED BY GRAIN HANDLING EQUIPMENT. **ALL PLUMBING CONNECTIONS SHOULD BE IN ACCORDANCE WITH NFPA PAMPHLET #58. CHECK ALL GAS CONNECTIONS ON DRYER FOR LEAKS BEFORE STARTING DRYING OPERATION.**

1. **LIQUID PROPANE (LP)**- **DPSL DRYERS** WITH INTERNAL VAPORIZER
AVERAGE PROPANE ORIFICE SIZE 9/32" TO 23/64" I.D.

DRYER MUST BE STARTED ON VAPOR UNTIL INTERNAL VAPORIZER IS WARM, THEN SWITCH TO LIQUID. TANK MUST HAVE BOTH VAPOR AND LIQUID DRAW AVAILABLE TO DRYER.

NOTE: OCCASIONALLY CONDITIONS MAY EXIST THAT REQUIRES ORIFICE SIZE TO BE MODIFIED.

THE DRYER IS DESIGNED TO OPERATE ON LIQUID PROPANE WITH LIQUID DRAW FROM A SUPPLY TANK. A PLUMBING SYSTEM IS PROVIDED ON THE DRYER WHICH INCLUDES: MANUAL SHUT-OFF VALVE, LINE STRAINER, PRESSURE RELIEF VALVES, ELECTRIC OPERATED LIQUID AND VAPOR SOLENOID VALVE, HI VAPOR CUTOUT TUBE VAPORIZER, PRESSURE REGULATOR, MODULATING VALVE AND BURNER. THE DRYER SHOULD BE SUPPLIED WITH 12 POUNDS OF WORKING PRESSURE AT DRYER BASE.

2. **SUPPLY TANK**

DO NOT USE PROPANE SUPPLY TANKS THAT HAVE PREVIOUSLY CONTAINED AMMONIA OR FERTILIZER SOLUTIONS. THESE SUBSTANCES ARE **EXTREMELY CORROSIVE** AND DAMAGING TO THE FUEL SUPPLY AND BURNER PARTS.

WITH LIQUID DRAW FROM THE SUPPLY TANK, ANY WATER PRESENT IN THE TANK MAY FREEZE IN THE PIPING AND CONTROLS IN COLD WEATHER. TO INSURE THAT TANKS ARE FREE OF MOISTURE, THE USUAL PRECAUTION IS TO PURGE WITH METHANOL. AVOID THE TANK THAT MAY CONTAIN ACCUMULATIONS OF OIL OR HEAVY HYDROCARBONS FROM LONG USE IN A VAPOR WITHDRAWAL SYSTEM.

PROPANE SUPPLY TANK RECOMMENDED MINIMUM OF 1000 GAL. CONNECTED FOR LIQUID DRAW.

DRYER MUST BE STARTED ON VAPOR UNTIL INTERNAL VAPORIZER IS WARM, THEN SWITCH TO LIQUID. TANK MUST HAVE BOTH VAPOR AND LIQUID DRAW AVAILABLE TO DRYER.

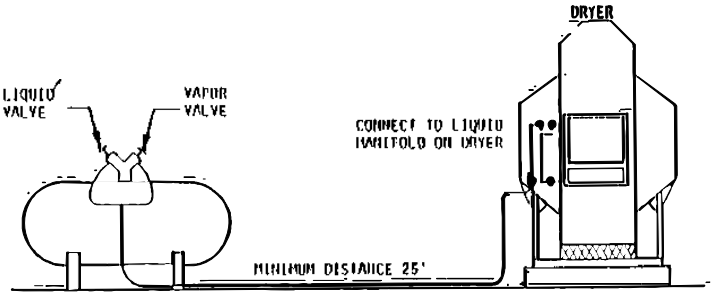

MODEL (DPSL)	10FT 3520	15FT 4530	20FT 7040	25FT 8560	30FT 10560	40FT 14080
ML/BTU/HR @ 10F	3.27	4.20	6.54	8.41	9.81	13.10
GAL/HR. @ 10F	36	46	71	91	107	142
LINE SIZE I.D.	1/2"	1/2"	5/8"	3/4"	3/4"	1"
ORIFICE DIA.	1-5/16"	1-23/64"	2-5/16"	2-23/64"	3-5/16"	4-5/16"
OPERATING PSI	10-20	10-20	10-20	10-20	10-20	10-20

FIGURE 5-CA LIQUID PROPANE (LP) FUEL SYSTEM

3. **NATURAL GAS (NAT) (DP) DRYERS**

AVERAGE NATURAL GAS ORIFICE SIZE 3/8" TO 15/32" I.D.

NOTE: OCCASIONALLY CONDITIONS MAY EXIST THAT REQUIRES ORIFICE SIZE TO BE MODIFIED.

THE DRYER IS DESIGNED TO OPERATE ON NATURAL GAS HAVING A HEAT VALUE OF ABOUT 1040 BTU PER CUBIC FOOT. THE DRYER REQUIRES A PRESSURE REGULATOR INSTALLED NEAR DRYER BASE FOR MINIMUM PRESSURE FLUCTUATION. THE DRYER SHOULD BE SUPPLIED WITH 10 POUNDS OF WORKING PRESSURE AT DRYER BASE.

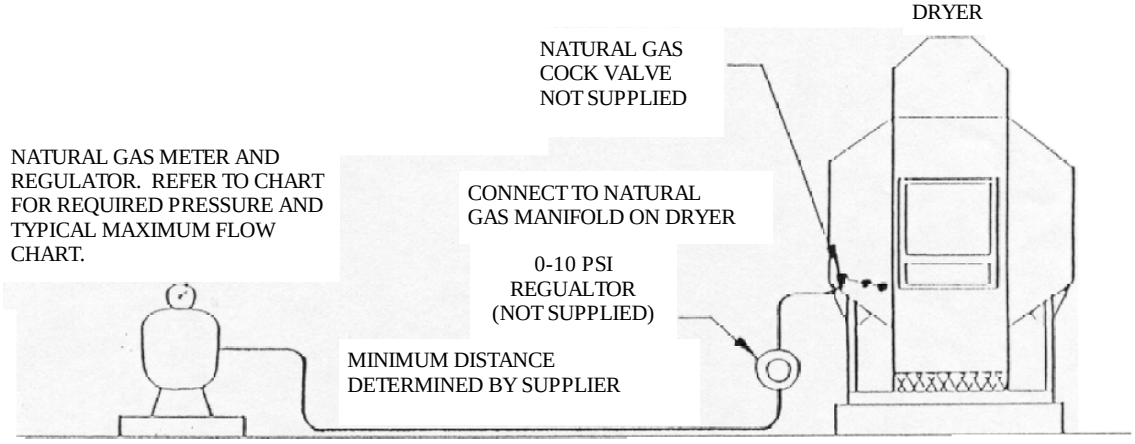

MODEL (DP)	10FT 3015	15FT 4025	20FT 6030	25FT 7550	30FT 9045	40FT 12060
ML/BTU/HR @10F	2.76	3.77	5.50	7.53	8.25	11.00
CU/FT/HR @10F	2760	3355	5520	6710	8280	11040
LINE SIZE I.D	2″	2″	2″	2″	2″	2″
ORFICE DIA.	1-3/8″	1-15/32″	2-3/8″	2-15/32″	3-3/8″	4-3/8″
OPERATING PSI	6-10	6-10	6-10	6-10	6-10	6-10

FIGURE 5-D NATURAL GAS (NAT) FUEL SYSTEM

3. NATURAL GAS (NAT) DPSL DRYERS

AVERAGE NATURAL GAS ORIFICE SIZE 3/8" TO 31/64" I.D.

NOTE: OCCASIONALLY CONDITIONS MAY EXIST THAT REQUIRES ORIFICE SIZE TO BE MODIFIED.

THE DRYER IS DESIGNED TO OPERATE ON NATURAL GAS HAVING A HEAT VALUE OF ABOUT 1040 BTU PER CUBIC FOOT. THE DRYER REQUIRES A PRESSURE REGULATOR INSTALLED NEAR DRYER BASE FOR MINIMUM PRESSURE FLUCTUATION. THE DRYER SHOULD BE SUPPLIED WITH 10 POUNDS OF WORKING PRESSURE AT DRYER BASE.

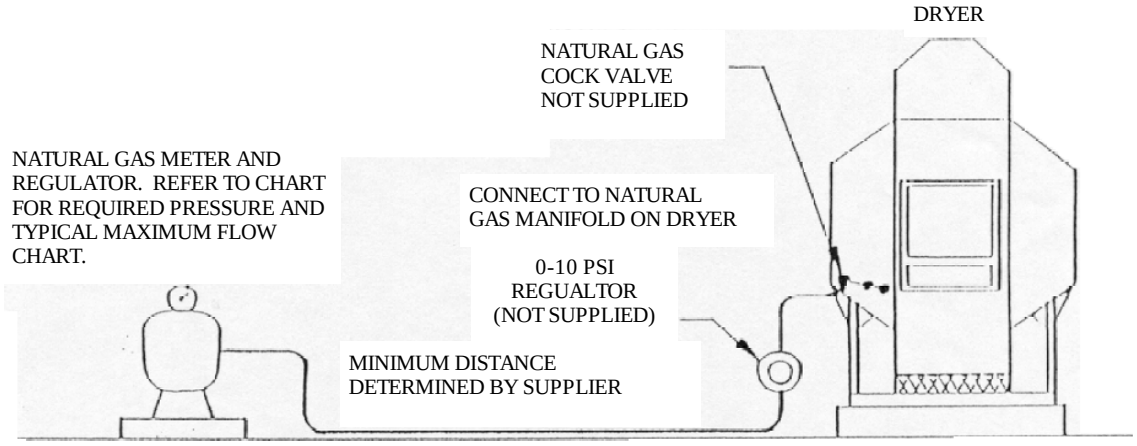

MODEL (DPSL)	10FT 3520	15FT 4530	20FT 7040	25FT 8560	30FT 10560	40FT 14080
ML/BTU/HR @10F	3.27	4.20	6.54	8.41	9.81	13.10
CU/FT/HR @10F	3144	4042	6288	8084	9431	12591
LINE SIZE I.D	2″	2″	2″	2″	2″	2″
ORFICE DIA.	1-29/64″	1-31/64″	2-29/64″	2-31/64″	3-29/64″	4-29/64
OPERATING PSI	6-10	6-10	6-10	6-10	6-10	6-10

FIGURE 5-DA NATURAL GAS (NAT) FUEL SYSTEM

ELECTRICAL - FUEL HOOK-UP AND CHECKOUT

1. **POWER SUPPLY**

AN ADEQUATE POWER SUPPLY AND PROPER WIRING ARE IMPORTANT FOR MAXIMUM PERFORMANCE AND LONG DRYER LIFE. **ELECTRICAL SERVICE MUST BE ADEQUATE IN SIZE TO PREVENT LOW VOLTAGE DAMAGE TO MOTORS AND CONTROL CIRCUITS.** PROPER LINE PHASING MUST ALSO BE OBSERVED.

2. **POWER SUPPLY CIRCUIT BREAKER**

ALL DELUX GRAIN DRYERS SHOULD BE EQUIPPED WITH A MASTER CIRCUIT DISCONNECT TO PERMIT TOTAL SHUT-DOWN OF THE DRYING SYSTEM. IT IS SUGGESTED THAT ALL WET AND DRY HANDLING EQUIPMENT BE INTERLOCKED THROUGH MASTER CIRCUIT DISCONNECT. CALCULATE TOTAL AMP. LOAD OF SYSTEM TO MAKE SURE LOAD DOES NOT EXCEED DISCONNECT RATING.

3. **TRANSFORMERS - WIRE - VOLTAGE DROP**

CONTACT THE SERVICE REPRESENTATIVE OF YOUR LOCAL POWER COMPANY TO ADVISE OF ADDITIONAL LOAD TO BE PLACED ON THE LINE. CHECK ON KVA RATING OF TRANSFORMERS, CONSIDERING TOTAL H.P. LOAD. THE POWER SUPPLY WIRING AND TRANSFORMERS MUST BE CAPABLE OF PROVIDING ADEQUATE MOTOR STARTING AND OPERATING VOLTAGE.

4. **CONSIDERING TOTAL H.P. LOAD** AND DISTANCE FROM TRANSFORMER. SIZE AND INSTALL WIRE AND CONDUIT BETWEEN TRANSFORMERS AND DRYER ELECTRICAL SERVICE CENTER.

***NOTE: MAKE SURE DRYER IS ADEQUATELY GROUNDED.**

5. **CONDUIT INSTALLATION**

GARNER BIN HIGH GRAIN SHUTDOWN, LOW GRAIN SHUTDOWN CONTROLS AND THE LEVELING AUGER MOTOR ARE SUPPLIED WITH CONDUIT AND WIRING, REFER TO DRAWING OF GARNER.

6. **INTERNAL FUEL LINE HOOK-UP**

THE DRYER IS EQUIPPED WITH A PLUMBING TRAIN CONTAINING SAFETY CONTROLS. REFER TO DRAWINGS OF FUEL LINE HOOK-UP FOR ALL MODELS.

7. **FUEL SUPPLY**

(REFER TO SECTION 5 OF SERVICE MANUAL FOR "FUEL SUPPLY RECOMMENDED"). CONTACT YOUR LOCAL FUEL SUPPLIER FOR PROPER SIZING OF REGULATORS AND PLUMBING.

8. **FLAME ROD(S) AND SPARK IGNITER ADJUSTMENT**

CHECK BURNER FLAME ROD(S) AND SPARK IGNITER ADJUSTMENT.

A. THE FLAME ROD(S) SHOULD BE CHECKED TO SEE THAT THE CERAMIC BASE HAS NOT BEEN CRACKED. CHECK SPARK IGNITER: (SHOULD HAVE 1/8" TO 3/16" GAP).

9. **INSPECT INSIDE OF DRYER**

CHECK INSIDE OF DRYER SECTION FOR FOREIGN MATERIAL AND REMOVE. CHECK METERING ROLLS FOR FOREIGN OBJECTS SUCH AS BOLTS, ETC.

10. **MOTOR ROTATION**

A. **FAN ROTATION**: LOOKING INTO FAN OUTLET, ROTATION SHOULD BE CLOCKWISE. WHEN ELECTRICAL SERVICE IS INSTALLED, ATTENTION MUST BE PAYED TO PROPER PHASING. ALL MOTORS HAVE BEEN PHASED AT FACTORY. IN THE EVENT PHASES ARE REVERSED, SHUT OFF POWER ON MAIN BREAKER, REVERSE T1 AND T2 AT MAIN BREAKER. **CHECK BACKSIDE OF FAN HUBS FOR FOREIGN OBJECTS THAT WILL THROW FAN OUT OF BALANCE.** FAN CURRENT SHOULD BE CHECKED TO BE SURE AMPERAGE IS WITHIN LIMITS ON NAMEPLATE.

B. **DISCHARGE CONVEYOR**:

1. **SCREW CONVEYOR** - CHECK ROTATION BY OBSERVING AUGER FLIGHT WHILE IN OPERATION. IF ROTATION IS INCORRECT, REVERSE T1 AND T2 MOTOR LEADS AT CONVEYOR STARTER.

2. **METERING ROLL DIRECTION** - THIS SHOULD BE CORRECT FROM THE FACTORY. ROTATION SHOULD ALLOW GRAIN TO FLOW OVER FEED ROLL. IF DIRECTION IS INCORRECT, REVERSE LEADS A1 AND A2 ON SCR CONTROL UNIT.

STARTUP PROCEDURE

ALL MODEL SERIES DRYERS

1. **CHECK DRYER THOROUGHLY BEFORE STARTING**

   A. CHECK AND CLEAN SCREENS IN PLENUM CHAMBER.
   B. CHECK METERING SYSTEM FOR FOREIGN MATERIAL AND CLEAN.
   C. CHECK AUGERS AND AUXILIARY EQUIPMENT FOR CORRECT ROTATION.

2. **FRESH-AIR INTAKE DOORS**

   A. FRESH-AIR INTAKE DOORS ARE PROVIDED TO ALLOW FRESH AIR TO FLOW DIRECTLY TO THE FAN(S). THE FAN(S) CANNOT RECEIVE ENOUGH AIR DIRECTLY THROUGH THE GRAIN BEING COOLED SO FRESH-AIR INTAKE PORTS ARE PROVIDED. THESE PORTS ALLOW THE OPERATOR TO HAVE MORE CONTROL OVER THE OUT GOING TEMPERATURE OF THE PRODUCT BEING DRIED.

   B. **SETTINGS:** OPEN THE DOORS THAT ARE LOCATED DIRECTLY ON THE FAN(S) FULL OPEN. OPEN OTHER DOORS AS NEEDED BUT NOT LESS THAN ONE INCH. WHEN THE GRAIN IS NOT COOL ENOUGH CLOSE THE DOORS DOWN THAT ARE NOT LOCATED DIRECTLY ON THE FAN(S) - WHEN GRAIN IS TOO COOL OPEN THESE DOORS. KEEP ALL DOORS THAT ARE BEING ADJUSTED THE SAME AS EACH OTHER. WHEN DRYING LOW MOISTURE PRODUCTS, TO OBTAIN A COOL PRODUCT IT MAY BE NECESSARY TO ALSO ADJUST THE PLENUM TEMPERATURE DOWN.

   C. **CAUTION: HAVING THE FRESH AIR INTAKE PORTS CLOSED TOO FAR CAN DECREASE CAPACITY AND CAUSE EXCESSIVE HEAT WHICH COULD RESULT IN UNEVEN MOISTURE CONTENT OF DISCHARGE GRAIN AND IN EXTREME CONDITIONS, FIRES ON THE HEAT DECK.**

3. **ALL SWITCHES IN "OFF" POSITION**

   A. MAIN POWER LIGHT WILL COME "ON".

4. **TURN "ON" MAIN POWER**

5. **TO FILL WITH WET GRAIN**

   A. MOVE POWER SWITCH TO "ON" POSITION. THIS WILL ENERGIZE PANEL POWER RELAY AND PROVIDE 115 VAC TO CONTROL SYSTEM. SAFETY CIRCUIT LIGHT WILL COME "ON" AND SAFETY CIRCUIT MONITOR LIGHTS WILL COME "ON".

   B. MOVE LOAD SWITCH TO "ON" POSITION. LOADING SYSTEM WILL BE ACTIVATED AND WILL FILL DRYER. WHEN DRYER IS FULL OF GRAIN, HIGH GRAIN SHUTDOWN WILL SHUT OFF ALL LOADING EQUIPMENT AUTOMATICALLY. (LEAVE LOAD SWITCH IN "ON" POSITION.) GRAIN LOADING LIGHT WILL COME "ON" DURING FILLING - LOW GRAIN LIGHT WILL COME "ON" UNTIL DRYER IS FULL OF GRAIN THEN GO "OUT".

6. **TO START FAN(S)**

   A. MOVE FAN START SWITCH TO "ON" POSTION UNTIL ALL FAN(S) START. FAN PROVEN LIGHT(S) WILL COME "ON" AS FAN(S) PROVE. PURGING LIGHT WILL COME "ON" AFTER FAN(S) PROVE.

   B. DRYERS WITH TWO (2) OR MORE FANS ARE EQUIPPED WITH AUTOMATIC LOAD

TIMERS, WHICH ALLOW ONLY ONE(1) FAN TO START AT A TIME.

7. **TO START BURNER(S)**

A. TURN "ON" FUEL SUPPLY TO DRYER.

1. **NATURAL GAS** - "OPEN" MANUAL VALVE.

2. **LP GAS** - OPEN AT SUPPLY TANK, QUICK ACTING VALVE AND BALL VALVE "ON" DRYER.

DRYER MUST BE STARTED ON VAPOR UNTIL INTERNAL VAPORIZER IS WARM, THEN SWITCH TO LIQUID. TANK MUST HAVE BOTH VAPOR AND LIQUID DRAW AVAILABLE TO DRYER.

B. WHEN BURNER READY LIGHT COMES "ON", A 60 SECOND PURGE CYCLE HAS BEEN COMPLETED.

C. MOVE BURNER SWITCH TO "ON" POSITION.

D. AFTER A SHORT TIME DELAY THE IGNITION FIRING LIGHT(S) WILL COME "ON".

E. WITHIN A FEW SECONDS THE BURNER PROVEN LIGHT(S) WILL COME "ON" SHOWING BURNER(S) HAVE PROVEN FLAME, AS BURNER PROVEN LIGHT(S) COME "ON" THE IGNITION FIRING LIGHT(S) WILL GO "OUT".

F. ADJUST FUEL PRESSURE

1. **NATURAL GAS** - 2# TO 6# NORMAL - 10 # MAXIMUM

2. **LP GAS** - 10# TO 12# NORMAL - 20 # MAXIMUM

G. ADJUST PLENUM SETPOINT FOR DESIRED OPERATING TEMPERATURE.

1. **TO INCREASE HEAT**, USE THE “UP” ARROW KEY OF THE TEMPERATURE CONTROLLER TO INCREASE THE SETPOINT TO THE DESIRED OPERATING TEMPERATURE.

SEE FIGURE 7-A FOR PLENUM TEMPERATURES FOR VARIOUS CROPS.

NOTE: RECOMMENDED PLENUM HIGH LIMIT SETTING: 30 TO 50°F ABOVE PLENUM TEMPERATURE. MAXIMUM SETTING ALLOWED: 260°F

SUGGESTED PLENUM TEMPERATURES

BARLEY	120-140 F
CORN	190-210 F
FLAX	120-130 F
MILO	160-180 F
MUSTARD SEED	110-130 F
OATS	120-140 F
RICE	115-125 F
RYE	120-140 F
SOYBEANS	140-160 F
SUNFLOWER	120-130 F
WHEAT	160-180 F

FIGURE 7-A

2. **TO DECREASE HEAT**, USE THE “DOWN” ARROW KEY OF THE TEMPERATURE CONTROLLER TO DECREASE THE SETPOINT TO THE DEISRED OPERATING TEMPERATURE.

H. WHEN TEMPERATURE HAS REACHED DESIRED SET POINT IN PLENUM CHAMBER AND DRYER HAS HAD SUFFICIENT TIME TO WARM UP, "OPEN" LIQUID VALVE AT PROPANE TANK AND SHUT "OFF" VAPOR SUPPLY.

I. ADJUST MODULATING CONTROL FOR DESIRED OPERATING TEMPERATURE.

Watlow EZ-ZONE Automatic Temperature Controller

Introduction

Your Delux grain dryer is equipped with an automatic temperature control system that is simple and takes the hassle out of continually watching the dryer for temperature fluctuations. Simply set your target plenum temperature and the controller will maintain that temperature. To better understand the controller and how to use it, please spend a little time to familiarize yourself with common keys and the display.



A) **Upper Display (Process Value)** – In the home page this is the current plenum temperature. Otherwise it is the upper display parameter in other menus.
B) **Lower Display (Set Point)** – In the home page this is the user-defined value that sets the desired operating temperature (plemum temperature). Use the “UP” & “DOWN” buttons (I & J) to increase or decrease the setpoint. Otherwise it is the lower display parameter in other menus.
C) **Reset Key** – This key is essentially a “BACKSPACE” key to any of the programming menus. Press and hold for two seconds to return to the Home Page. From the Home Page it can clear alarms and errors if clearable.
D) **EZ Key** – This key can be programmed to do a variety of functions. Shipped from factory (DELUX) this key has no programmed functions.
E) **Advance Key** – This key advances through parameter prompts.
F) **Temperature Units** – Indicates whether the temperature is displayed in Fahrenheit or Celsius.
G) **Output Activity** – Numbered LEDs indicate activity of outputs. *A flashing light indicates output activity and systems are normal*.
H) **Percent Units** – Lights when the controller is displaying values as a percentage or when the open-loop set point is displayed (manual mode).
I, J) **Up & Down Key** – In the Home Page, adjusts the set point in the lower display (B). In other menus, changes the upper display (A) to a higher or lower value, or changes a parameter selection.

*Note: ZONE 1 does not refer to anything relevant to dryer operation.

Initial Start-Up From Factory (Auto-Tuning)

THIS PROCEDURE **MUST** BE DONE DURING INITIAL START-UP FROM FACTORY

The temperature controller must be auto-tuned after shipping from the factory to the customer. Not performing the auto-tune may result in the plenum temperature becoming unstable during operation. To perform the auto-tune, follow the steps below:

1) Must have power & fuel to the dryer.
2) The dryer must be full of grain.
3) Adjust the target plenum temperature on the controller to 180 °F (60 °C).
4) Turn main panel power "ON".
5) Hold momentary fan switch "ON" until all fans have started.
6) Turn burner switch to "ON"
7) To start the auto-tuning process, press the advance (green) key 4 (four) times to reach the following screen:



8) Use the UP or DOWN key to change the upper display to "YES". Press the RESET key to return to the main screen. The controller will begin to flash "AtEn" in the lower display and "tUn 1" in the upper display, <u>indicating that the auto-tuning is in progress.</u>
9) The temperature will cycle both above and below the temperature setpoint (180 °F) to check the responsiveness of the system. This process may last several minutes. Once the controller has stopped flashing "AtEn" in the lower display and "tUn 1" in the upper display the auto-tuning process is complete *<u>(Note: It is important that the controller is not disturbed until the process is complete)</u>*. The temperature should increase slowly up to the setpoint (180 °F) and become stable (as long as the temperature seems stable, you may now adjust the set point to the desired drying temperature).
10) At this time the modulating motor (located on the valve train to the left of the panel box) should be moving in small increments, advancing slowly to the target plenum temperature.
11) Give the system ample time to zero in on the desired plenum temperature (minimum of 20 minutes).

12) It may be necessary to repeat the process with changing variables outside the system, but not needed every time starting the dryer.

Micro-Tuning

From the factory, this mode is enabled. By enabling this, it allows the controller to constantly change its parameters that control the stability of the temperature system.

For example: A change in gas pressure can reduce the stability of the system, but by having this enabled it can change its calculations accordingly to compensate for the difference.

To change this parameter:
With main panel power "ON", press the ADVANCE (green) key 5 times to reach the following screen:



This Is Factory Default

Use the UP or DOWN key to change the upper display to "no". Press the RESET key to return to exit and return to the main screen.

"no" - feature disabled
"YES" - feature enabled

Linkage and Modulating Motor Calibration

THIS PROCEDURE IS PERFORMED AT THE FACTORY AND SHOULD NOT BE REQUIRED DURING INITIAL SETUP

To calibrate the modulating motor to the controller, follow the steps below closely:

1) ***<u>The linkage must be set EXACTLY as the drawing (No.: 900-009214) on the next page shows. Errors in the linkage setup will cause temperature stability problems.</u>***
2) With all the switches in the "OFF" position and power locked out from the Dryer Control Center, place a jumper wire between terminals #20 and #22 located on the insert panel of the Dryer Control Center. Once the jumper is in place return power to the Control Center.
3) The dryer ***<u>should not</u>*** be running during this procedure, but main panel power must be present and the safety circuit proven.
4) From the Home Screen press the ADVANCE (green) key 2 times to reach the screen shown on right of page.
5) Use the UP key to change the upper display to "MAn". Press the RESET once key to return to the Home Screen. The controller is now in manual mode.
6) On the controller, use the UP or DOWN key to change the lower display to "0.0".
7) Remove the blue weather cover from modulating motor.
8) Remove top motor cover from modulating motor.
9) Find the turn dial potentiometer labeled "ZERO" on the circuit board and with a small screwdriver, increase to its maximum. Find the turn dial potentiometer labeled "SPAN" and decrease it to its minimum.
10) Wait for modulating motor to stop (if any movement).
11) Slowly decrease the "ZERO" until the actuator begins to respond. The modulating motor should start and run clockwise approximately two degrees.
12) Slowly increase the zero just enough to return the modulating motor back to its full counter-clockwise position.
13) On the controller use the UP or DOWN key to change the lower display to " 100.0".
14) Slowly increase the "SPAN" until there is a slight counter-clockwise movement of the modulating motor. The modulating motor should start and run counter-clockwise approximately two degrees.
15) Slowly decrease the "SPAN" just enough to return the modulating motor back to its full clockwise position.
16) Repeat step 4, and use the DOWN arrow key to change the upper display to back to "Auto" like figure above. Press the RESET key to return to the Home Screen. The controller has now returned to automatic mode *<u>(Note: In normal dryer operation the dryer must be in automatic mode to function properly).</u>*
17) Remove the jumper that was put in place in step 2.



START
(VALVE SHOWN IN CLOSED STATE)

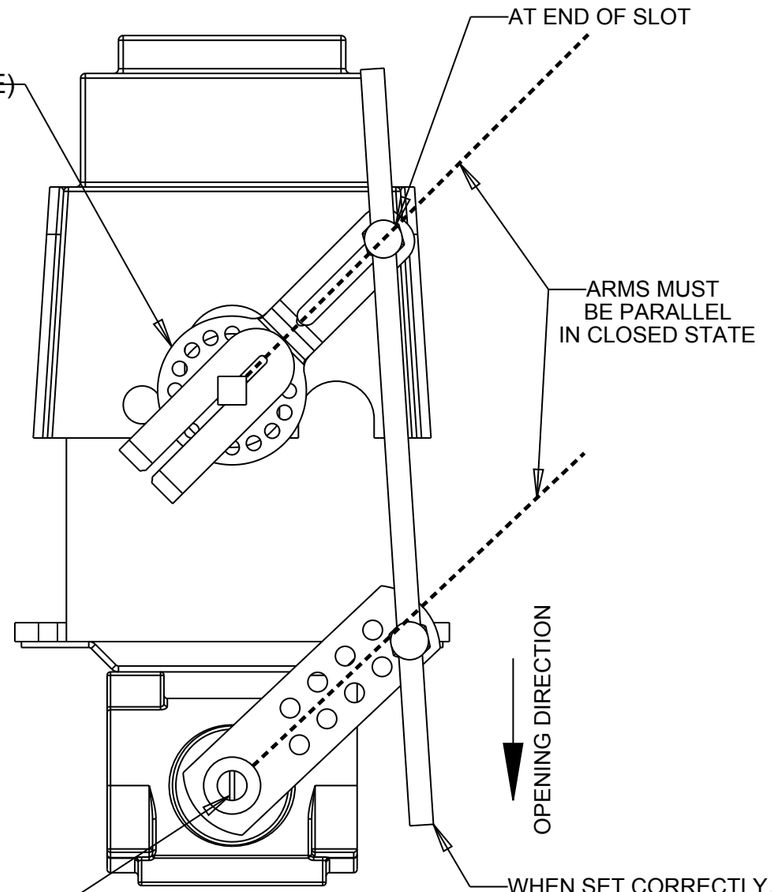

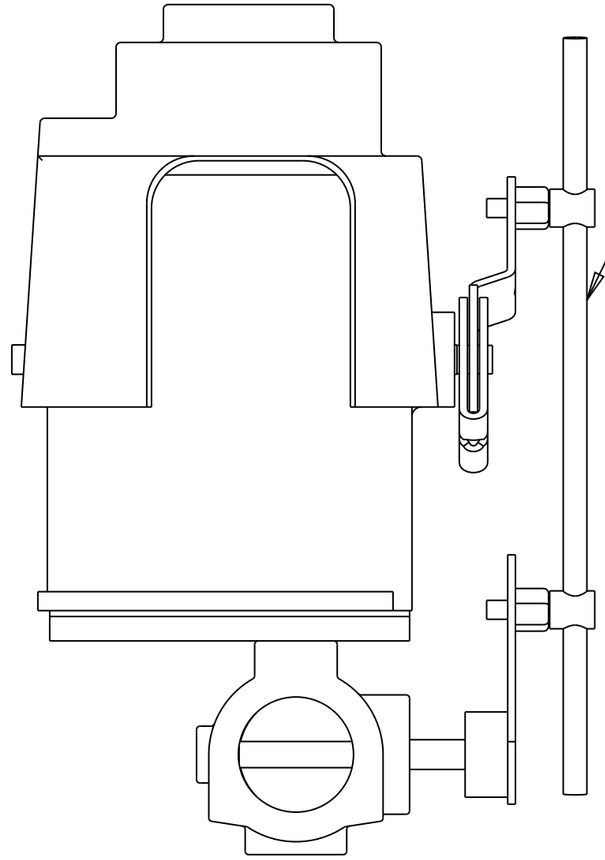

SIDE VIEW

				DRAWN BY: JGW	**DELUX MFG. CO.** KEARNEY, NE	TITLE: ILLUSTRATION TEMPERATURE CONTROL MODULATING MOTOR & LINKAGE ADJUSTMENT
				DATE: 01/06/10		
				CHK'D	USED ON:	
					NEXT ASS'Y:	
				SCALE: .500	MATL. / SHEAR SIZE	DRAWING NO. 900-009214
ECO#	LET	DESCRIPTION	DATE			

TOLERANCE: DECIMAL ±.010 FRACTION ±1/32 ANGLE ±1° UNLESS OTHERWISE SPECIFIED

Minimum Flame Adjustment

The minimum flame adjustment is programmed from the factory, and under normal circumstances should not have to be adjusted.

1) Hold the UP or DOWN arrow keys together for 6 seconds. "A i" should be in upper display and "SEt" in lower display.
2) Press the DOWN arrow key 3 times. "otPt" should be in upper display and "SEt" in lower display.
3) Press the ADVANCE (green) key 5 times. "4.75" should be in upper display and "S.Lo" in lower display.
4) Use the UP or DOWN arrow keys to adjust the upper display parameter from "4.75" (factory default) Scale: 4.00-MIN - 8.00-MAX. ***Do not go above or below this scale, even if it allows you to do so.***

High Limit

The controller is equipped with an integrated high limit control. Should the operating temperature rise above the high limit set point, the dryer will shut down automatically.
To change the high limit temperature set point:

1) From the Home Page press the ADVANCE (green) key 6 times. "250" (factory default) should appear in the upper display and "SP.h i" in the lower display.
2) Use the UP or DOWN key to adjust the high limit set point.
3) Hold the RESET key until you return to the Home Page.

If under normal operation, the high limit set point is reached the dryer will shut down, and prevent the dryer from being restarted until the dryer has had sufficient time to cool down. Reset the panel power after the dryer has had time to cool to clear high limit error. Error message: "L ih i" in the upper display and "AtEn" in the lower display.

The integrated system has its own sensor that monitors the temperature inside the plenum, separate from the sensor that controls the actual temperature. However these sensors are located in the same junction box. Should the high limit sensor fail, it will automatically shut control circuit power to the dryer and prevent it from being started until the problem with the high limit sensor is fixed. Error messages: "L iE i" ; "Er.i 2" in the upper display and "AtEn" in the lower display.

If the temperature control sensor fails, the system is designed to flash a warning message that indicates that there is a sensor error. The dryer will still operate under this condition, but it is advised the temperature control sensor be fixed. Error message: "Er.i i" in the upper display and "AtEn" in the lower display

Alarm, Limit, Indication & Error Messages

Indication	Description	Possible Cause(s)	Corrective Action
Alarm won't clear or reset	Alarm will not clear or reset with keypad or digital input	• Alarm latching is active • Alarm set to incorrect output • Alarm is set to incorrect source • Sensor input is out of alarm set point range • Alarm set point is incorrect • Alarm is set to incorrect type • Digital input function is incorrect	• Reset alarm when process is within range or disable latching • Set output to correct alarm source instance • Set alarm source to correct input instance • Correct cause of sensor input out of alarm range • Set alarm set point to correct trip point • Set alarm to correct type: process, deviation or power • Set digital input function and source instance
Alarm won't occur	Alarm will not activate output	• Alarm silencing is active • Alarm blocking is active • Alarm is set to incorrect output • Alarm is set to incorrect source • Alarm set point is incorrect • Alarm is set to incorrect type	• Disable alarm silencing, if required • Disable alarm blocking, if required • Set output to correct alarm source instance • Set alarm source to correct input instance • Set alarm set point to correct trip point • Set alarm to correct type: process, deviation or power
AlE1 Alarm Error AlE2 AlE3 AlE4	Alarm state cannot be determined due to lack of sensor input	• Sensor improperly wired or open • Incorrect setting of sensor type • Calibration corrupt	• Correct wiring or replace sensor • Match setting to sensor used • Check calibration of controller
AlL1 Alarm Low AlL2 AlL3 AlL4	Sensor input below low alarm set point	• Temperature is less than alarm set point • Alarm is set to latching and an alarm occurred in the past • Incorrect alarm set point • Incorrect alarm source	• Check cause of under temperature • Clear latched alarm • Establish correct alarm set point • Set alarm source to proper setting
AlH1 Alarm High AlH2 AlH3 AlH4	Sensor input above high alarm set point	• Temperature is greater than alarm set point • Alarm is set to latching and an alarm occurred in the past • Incorrect alarm set point • Incorrect alarm source	• Check cause of over temperature • Clear latched alarm • Establish correct alarm set point • Set alarm source to proper setting
Er.i1 Error Input Er.i2	Sensor does not provide a valid signal to controller	• Sensor improperly wired or open • Incorrect setting of sensor type • Calibration corrupt	• Correct wiring or replace sensor • Match setting to sensor used • Check calibration of controller
Limit won't clear or reset	Limit will not clear or reset with keypad or digital input	• Sensor input is out of limit set point range • Limit set point is incorrect • Digital input function is incorrect	• Correct cause of sensor input out of limit range • Set limit set point to correct trip point • Set digital input function and source instance
LiE1 Limit Error	Limit state cannot be determined due to lack of sensor input, limit will trip	• Sensor improperly wired or open • Incorrect setting of sensor type • Calibration corrupt	• Correct wiring or replace sensor • Match setting to sensor used • Check calibration of controller
LiL1 Limit Low	Sensor input below low limit set point	• Temperature is less than limit set point • Limit outputs latch and require reset • Incorrect alarm set point	• Check cause of under temperature • Clear limit • Establish correct limit set point

Indication	Description	Possible Cause(s)	Corrective Action
LiH1 Limit High	Sensor input above high limit set point	• Temperature is greater than limit set point • Limit outputs latch and require reset • Incorrect alarm set point	• Check cause of over temperature • Clear limit • Establish correct limit set point
LPo1 LPo2 Loop Open Error	Open Loop Detect is active and the process value did not deviate by a user-selected value in a user specified period with PID power at 100%.	• Setting of Open Loop Detect Time incorrect • Setting of Open Loop Detect Deviation incorrect • Thermal loop is open • Open Loop Detect function not required but activated	• Set correct Open Loop Detect Time for application • Set correct Open Loop Deviation value for application • Determine cause of open thermal loop: misplaced sensors, load failure, loss of power to load, etc. • Deactivate Open Loop Detect feature
LPr1 LPr2 Loop Reversed Error	Open Loop Detect is active and the process value is headed in the wrong direction when the output is activated based on deviation value and user-selected value.	• Setting of Open Loop Detect Time incorrect • Setting of Open Loop Detect Deviation incorrect • Output programmed for incorrect function • Thermocouple sensor wired in reverse polarity	• Set correct Open Loop Detect Time for application • Set correct Open Loop Deviation value for application • Set output function correctly • Wire thermocouple correctly, (red wire is negative)
rP1 Ramping 1 rP2 Ramping 2	Controller is ramping to new set point	• Ramping feature is activated	• Disable ramping feature if not required
tUn1 Autotuning 1 tUn2 Autotuning 2	Controller is autotuning the control loop	• User started the autotune function • Digital input is set to start autotune	• Wait until autotune completes or disable autotune feature • Set digital input to function other than autotune, if desired
No heat/cool action	Output does not activate load	• Output function is incorrectly set • Control mode is incorrectly set • Output is incorrectly wired • Load, power or fuse is open • Control set point is incorrect • Incorrect controller model for application	• Set output function correctly • Set control mode appropriately (Open vs Closed Loop) • Correct output wiring • Correct fault in system • Set control set point in appropriate control mode and check source of set point: remote, idle, profile, closed loop, open loop • Obtain correct controller model for application
No Display	No display indication or LED illumination	• Power to controller is off • Fuse open • Breaker tripped • Safety interlock switch open • Separate system limit control activated • Wiring error • Incorrect voltage to controller	• Turn on power • Replace fuse • Reset breaker • Close interlock switch • Reset limit • Correct wiring issue • Apply correct voltage, check part number
No Serial Communication	Cannot establish serial communications with the controller	• Address parameter incorrect • Incorrect protocol selected • Baud rate incorrect • Parity incorrect • Wiring error • EIA-485 converter issue • Incorrect computer or PLC communications port • Incorrect software setup • Wires routed with power cables • Termination resistor may be required	• Set unique addresses on network • Match protocol between devices • Match baud rate between devices • Match parity between devices • Correct wiring issue • Check settings or replace converter • Set correct communication port • Correct software setup to match controller • Route communications wires away from power wires • Place 120 Ω resistor across EIA-485 on last controller

Indication	Description	Possible Cause(s)	Corrective Action
Process doesn't control to set point	Process is unstable or never reaches set point	• Controller not tuned correctly	• Perform autotune or manually tune system
		• Control mode is incorrectly set	• Set control mode appropriately (Open vs Closed Loop)
		• Control set point is incorrect	• Set control set point in appropriate control mode and check source of set point: remote, idle, profile, closed loop, open loop
Temperature runway	Process value continues to increase or decrease past set point.	• Controller output incorrectly programmed	• Verify output function is correct (heat or cool)
		• Thermocouple reverse wired	• Correct sensor wiring (red wire negative)
		• Controller output wired incorrectly	• Verify and correct wiring
		• Short in heater	• Replace heater
		• Power controller connection to controller defective	• Replace or repair power controller
		• Controller output defective	• Replace or repair controller
100 Device Error rEtn	Controller displays internal malfunction message at power up.	• Controller defective • Sensor input over driven	• Replace or repair controller
hEr Heater Error	Heater Error	• Current through load is above current trip set point	• Check that the load current is proper. Correct cause of overcurrent and/or ensure current trip set point is correct.
		• Current through load is below current trip set point	• Check that the load current is proper. Correct cause of undercurrent and/or ensure current trip set point is correct.
CEr Current Error	Load current incorrect.	• Shorted solid-state or mechanical relay	• Replace relay
		• Open solid-state or mechanical relay	• Replace relay
		• Current transformer load wire associated to wrong output	• Route load wire through current transformer from correct output, and go to the CS1 Source Output Instance parameter (Setup Page, Current Menu) to select the output that is driving the load.
		• Defective current transformer or controller	• Replace or repair sensor or controller
		• Noisy electrical lines	• Route wires appropriately, check for loose connections, add line filters
Menus inaccessible	Unable to access SEt, OPEr, FCtY or ProF menus or particular prompts in Home Page	• Security set to incorrect level	• Check LoC settings in Factory Page • Enter appropriate password in ULoC setting in Factory Page
		• Digital input set to lockout keypad	• Change state of digital input
		• Custom parameters incorrect	• Change custom parameters in Factory Page
EZ-Key/s don't work	EZ-Key/s does not activate required function	• EZ-Key function incorrect	• Verify EZ-Key function in Setup Menu
		• EZ-Key function instance not incorrect	• Check that the function instance is correct
		• Keypad malfunction	• Replace or repair controller

Clearing Errors & Limit Messages

To clear error or limit messages press the RESET key. You may also turn main panel power “OFF” and back “ON” again. Error or Limit messages will not clear until the cause or reason for the error has been addressed.

Watlow EZ-ZONE Temperature Controller / High Limit - Config. Record

Operations Page



To reach the Operations page hold the "up" and "down" arrow keys together for **3 seconds**.

Menu	Instance	Parameter	Factory Setting	DELUX Setting	Parameter Description
A1	1				**Analog Input 1 (PID)**
		AIn	**	**	View the process value
		iEr	**	**	View the cause of the most recent error
		iCA	0	0	Defines calibration offset
	2				**Analog Input 2 (High Limit)**
		AIn	**	**	View the process value
		iEr	**	**	View the cause of the most recent error
		iCA	0	0	Defines calibration offset
LIM					**Limit**
		LhS	100	260	Defines the high process value that will trigger the limit
Mon					**Monitor**
		CrtA	**	**	View the active control mode
		hPr	**	**	View the current heat output level
		CSP	**	**	View the set point currently in effect
		PuA	**	**	View the current filtered process value using the control input
LooP					**Loop**
		Crt	AUto	AUto	Selects the method that this loop will use to control
		AtSP	90	90	Defines the the setpoint autotune will use as % of current setpoint
		AUt	no	no	Initiates the autotune process
		CSP	75	100	Defines the setpoint the controller will use in PID funtion
		idS	75	100	Defines a new PID setpoint if high limit is reached
		hPb	25	*35	Defines the proportianl band for the heat output
		ti	180	*56	Defines the PID intergral for the output
		td	0	*9	Defines the PID derivative time for the output
		db	0	0	Defines the offset to the proportional band
		oSP	0	0	Defines a fixed level of output power when in manual mode
ALM	1				**Alarm 1**
		ALo	32.0	32.0	Defines the low range of alarm instance
		Ahi	300.0	300.0	Defines the high range of the alarm instance
	2				**Alarm 2**
		ALo	32.0	32.0	Defines the low range of alarm instance
		Ahi	300.0	300.0	Defines the high range of the alarm instance
	3				**Alarm 3**
		ALo	32.0	32.0	Defines the low range of alarm instance
		Ahi	300.0	300.0	Defines the high range of the alarm instance
	4				**Alarm 4**
		ALo	32.0	32.0	Defines the low range of alarm instance
		Ahi	300.0	300.0	Defines the high range of the alarm instance

Watlow EZ-ZONE Temperature Controller / High Limit - Config. Record

Setup Page



To reach the Setup page hold the "up" and "down" arrow keys together for **6 seconds**.

Menu	Instance	Parameter	Factory Setting	DELUX Setting	Parameter Description
AI	1				**Analog Input 1 (PID)**
		SEn	tC	rO. IH	Selects the type of sensor used
		rtL	2	3	Selects the leads in sensor
		FiL	0.5	3	Filters erratic signal, for smoother PID calculations
		tEr	oFF	on	Forces manual clear of input errrors
		dEC	0	0	Selects precision of displayed units
		SbA	oFF	on	Enables or disables sensor backup
AI	2				**Analog Input 2 (High Limit)**
		SEn	tC	rO. IH	Selects the type of sensor used
		rtL	2	3	Selects the leads in sensor
		FiL	0.5	3	Filters erratic signal, for smoother PID calculations
		tEr	oFF	on	Forces manual clear of input errrors
		dEC	0	0	Selects precision of displayed units
LIM1					**Limit Function**
		LSd	both	h IGh	Selects which instance limit function will trip
		LhY	3	20	Defines the high limit hystersis band
		SPLh	9999	260	Defines the upper range of the high limit set point
		SPLL	- 1999	0	Defines the lower range of the high limit set point
		L.it	no	YES	Selects whether output and autotune are terminated when in limit state
LooP	1				**PID Loop 1**
		hAG	PId	PId	Selects the heat control method
		CAG	oFF	oFF	Selects the cool control method
		tUn	no	no	Enables or disable TRU-TUNE+ adaptive tune automatically
		tAGr	Cr it	Cr it	Selects the aggressiveness of the autotune funtion
		UFA	USEr	USEr	Selects what output will do when user switches to manual mode
		FAiL	USEr	oFF	Selects what ouput will do when an input error switches control to manual mode
		LdE	no	no	Enables or disables open-loop detction feature to monitor closed-loop operations
		rP	oFF	oFF	Selects when controller will ramp to setpoint
		LSP	- 1999	50	Defines the lower range of the PID setpoint (temperature in automatic mode)
		hSP	9999	250	Defines the upper range of the PID setpoint (temperature in automatic mode)
		SPLo	- 100	0	Defines the lower range of the PID setpoint (% output in manual mode)
		SPhi	100	100	Defines the upper range of the PID setpoint (% output in manual mode)
oUPt	1				**Output 1**
		oUY	uoLt	mA	Selects the type of output
		Fn	hEAt	hEAt	Selects which function will drive output
		Fi	1	1	Selects the instance of the function selected above
		SLo	0.00	4.75	Defines the lower range of the scale for the universal process output
		Shi	10.00	20.00	Defines the upper range of the scale for the universal process output
		oLo	0	0	Defines the low power scale, output will never be less than the value specified
		ohi	100	100	Defines the high power scale, output will never be less than the value specified
		oCA	0.0	0.0	Defines an offset value to the process output
	3				**Output 3**
		Fn	oFF	oFF	Selects which function will drive output
	4				**Output 4**
		Fn	LIM1	LIM1	Selects which function will drive output
ALM1	1				**Alarm 1**
		AtY	oFF	oFF	Selects whether the alarm trigger is a fixed value or will track set point
	2				**Alarm 2**

Menu	Instance	Parameter	Factory Setting	DELUX Setting	Parameter Description
		AtY	oFF	oFF	Selects whether the alarm trigger is a fixed value or will track set point
	3				**Alarm 3**
		AtY	oFF	oFF	Selects whether the alarm trigger is a fixed value or will track set point
	4				**Alarm 4**
		AtY	oFF	oFF	Selects whether the alarm trigger is a fixed value or will track set point
FUn					**Function**
		LEu	high	high	Selects the state in which the EZ key is in when powered up
		Fn	nonE	nonE	Selects the funtion of the EZ key
		Fi	0	0	Selects which instance the EZ key will affect
GLbL					**Global**
		C_F	F	F	Selects the unit of measurement
		AC.LF	60	60	Selects the AC line frequency
CoM					**Communications**
		Ad.S	1	1	Sets the network address of this controller
		C_F	F	F	Selects UOM in which this communications channel will display
		nU.S	YES	YES	Determines whether all values written to control will be saved in EEPROM

Watlow EZ-ZONE Temperature Controller / High Limit - Config. Record

Factory Page



To reach the Factory page hold the "RESET" and "Advance" arrow keys together for **6 seconds**.

Menu	Instance	Parameter	Factory Setting	DELUX Setting	Parameter Description
CUSt	1				**Custom 1**
		PAr	AC.Pu	AC.Pu	Defines custom parameter to home page
	2				**Custom 2**
		PAr	AC.SP	AC.SP	Defines custom parameter to home page
	3				**Custom 3**
		PAr	Pro	Pro	Defines custom parameter to home page
	4				**Custom 4**
		PAr	L.St	L.St	Defines custom parameter to home page
	5				**Custom 5**
		PAr	CM7	CM8	Defines custom parameter to home page
	6				**Custom 6**
		PAr	hPr	hPr	Defines custom parameter to home page
	7				**Custom 7**
		PAr	CPr	CPr	Defines custom parameter to home page
	8				**Custom 8**
		PAr	AUt	AUt	Defines custom parameter to home page
	9				**Custom 9**
		PAr	idLE	tEUn	Defines custom parameter to home page
	10				**Custom 10**
		PAr	CM7	CM8	Defines custom parameter to home page
	11				**Custom 11**
		PAr	hPr	hPr	Defines custom parameter to home page
	12				**Custom 12**
		PAr	CPr	CPr	Defines custom parameter to home page
	13				**Custom 13**
		PAr	AUt	AUt	Defines custom parameter to home page
	14				**Custom 14**
		PAr	idLE	idLE	Defines custom parameter to home page
	15				**Custom 15**
		PAr	LL.S	LL.S	Defines custom parameter to home page
	16				**Custom 16**
		PAr	LH.S	LH.S	Defines custom parameter to home page
	17				**Custom 17**
		PAr	nonE	nonE	Defines custom parameter to home page
	18				**Custom 18**
		PAr	nonE	nonE	Defines custom parameter to home page
	19				**Custom 19**
		PAr	nonE	nonE	Defines custom parameter to home page
	20				**Custom 20**
		PAr	nonE	nonE	Defines custom parameter to home page
LoC					**Lock**
		LoCo	2	2	Changes the security level of the operations page
		PASE	oFF	oFF	Enables or disables security features
		rLoC	5	5	Sets the read security clearance level
		SLoc	5	5	Sets the write security clearance level
diAG					
		Pn	**	**	Part number of device
		rEu	**	**	Software revision number
		SbLd	**	**	Software build number

Menu	Instance	Parameter	Factory Setting	DELUX Setting	Parameter Description
		Sn	**	**	Serial number of device
		dAtE	**	**	Date of manufacture
		USr.r	nonE	nonE	Restore user/default settings
		USr.S	nonE	nonE	Save current user settings
		C.LEd	both	both	Turns communications LED on or off for selected ports
		ZonE	on	on	Turns zone LED on or off based on selection
		chAn	on	on	Turns channel LED on or off based on selection
		d.Pr5	2	2	Defines the number of display pairs
CAL	1				**Calibration**
		Pru	**	**	View the raw electrical value for this input in units of sensor
		EL.Lo	1.000	1.000	Defines the value to calibrate the low end of the input range
		EL.o.o	0.00	0.00	Defines the value to calibrate the low end of the output range
		EL.o.S	1.000	1.000	Defines the value to calibrate the slope of the output value
	2				
		Pru	**	**	View the raw electrical value for this input in units of sensor
		EL.Lo	1.000	1.000	Defines the value to calibrate the low end of the input range
		EL.o.o	0.00	0.00	Defines the value to calibrate the low end of the output range
		EL.o.S	1.000	1.000	Defines the value to calibrate the slope of the output value

Watlow EZ-ZONE Automatic Moisture Controller

Introduction

Your Delux grain dryer is equipped with an automatic moisture control system that is simple and takes the hassle out of continually monitoring incoming grain for changes in moisture. To better understand the controller and how to use it, please spend a little time to familiarize yourself with common keys and the display.

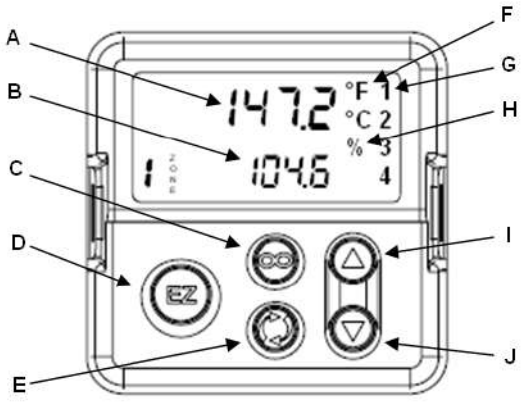

A) **Upper Display (Process Value)** – In the home page this is the current air temperature passing through the grain column (changes with fluctuations in grain moisture). Otherwise it is the upper display parameter in other menus.
B) **Lower Display (Set Point)** – This number will change when the user is adjusting the voltage on the voltmeter (using the UP or DOWN arrow keys) to match the output (DC voltage) that was present in the calibration (manual) mode.
C) **Infinity Key** – This key is essentially a "BACKSPACE" key to any of the programming menus. Press and hold for two seconds to return to the Home Page. From the Home Page it can clear alarms and errors if clearable.
D) **EZ Key** – This key can be programmed to do a variety of functions. Shipped from factory (DELUX) this key has no programmed functions.
E) **Advance Key** – This key advances through parameter prompts.
F) **Temperature Units** – Indicates whether the temperature is displayed in Fahrenheit or Celsius.
G) **Output Activity** – Numbered LEDs indicate activity of outputs. *A flashing light indicates output activity and systems are normal*.
H) **Percent Units** – Lights when the controller is displaying values as a percentage or when the open-loop set point is displayed (manual mode).
I, J) **Up & Down Key** – In the Home Page, adjusts the set point in the lower display (B). In other menus, changes the upper display (A) to a higher or lower value, or changes a parameter selection.

*Note: ZONE 1 does not refer to anything relevant to dryer operation.

Automatic Moisture Set-Up Guide

1) On initial start-up with wet grain, it is advisable to let the dryter run at operating temperature for 10-20 minutes before starting the discharge process.
2) Move unload switch to "ON" position (grain unloading light will come on) to start discharge auger system. *Note: Metering rolls will not operate unless all auger systems are on.*
3) Move metering selector switch to "MANUAL" position and adjust the manual metering control potentiometer for desired discharge rate (see formula & charts below for determining initial unloading rate)

    a. **Metering Roll Adjustment**
    The dry grain discharge rate is adjusted by rotating the manual metering control potentiometer. This is located on the control panel.
    Clockwise – Will increase the grain discharge rate & DC volts
    Counter-Clockwise – Will decrease the grain discharge rate & DC volts

4) **Wait at least one (1) hour** – until a complete cycle of grain through the dryer has been completed. One cycle consists from the time the grain enters the top of the dryer to the time it is discharge from the metering rolls, and the dryer has stabilized. Then check grain moisture. *Note: With wetter grain it may be necessary to wait longer to check samples.*
5) **If grain is too wet, decrease** manual metering control potentiometer (decrease DC voltage) and repeat step 4, allowing grain to stabilize.
6) **If grain is too dry, increase** manual metering control potentiometer (increase DC voltage) and repeat step 4, allowing grain to stabilize.
7) Repeat the steps above until final moisture content has been established and dryer has completely stabilize
8) With the moisture now stabilized in manual mode, **note the voltage present on the DC voltmeter.**
9) Switch the metering selector switch from MANUAL to AUTOMATIC. This gives control of the system to the automatic metering controller.

    a. There is an automatic/manual mode within the controller itself. This is always left in the automatic mode. All automatic /manual switching that is referred to in these instructions is the metering selector switch and **not** the controller.

10) **Set the voltage on the DC voltmeter to match what it was in manual mode.** Using the UP or DOWN arrow keys on the controller; change the set point on the controller to a number lower than the current temperature reading to bring it into operating range. Then ignore the temperature readings on the controller and watch the voltage readings on the DC voltmeter only.

a. UP arrow key – Decreases DC voltage
b. DOWN arrow key – Increases DC voltage

11) Adjust slowly so that the drive has time to react. DC voltage will not change until the UP or DOWN key is released.
12) If final moisture content is within 1 or 2 points of target moisture, minor adjustments can be made while in automatic mode. Be cautious not to make too much change too often. Let the system have ample time to process and adjust. If the variance is too great or not consistent, it may be necessary to return to manual mode and establish a new set point.
13) Proportional Band (h.Pb) – The proportional band is factory set for each model of dryer. It can be changed by pressing the ADVANCE key until reaching "h.Pb" in the lower display. It can be adjusted up or down depending on what the moisture of the discharged grain is doing.

    a. **Decrease** PB if it seems the dryer isn't reacting quickly enough to changes in incoming grain moisture.
    b. **Increase** PB if it seems the dryer is reacting too quickly to changes in incoming grain moisture.
    Note: it is the moisture of your discharging grain over a period of time that is important. Do not make changes too soon because the system appears to be changing speeds too quickly. Sometimes it takes aggressive action to maintain the desired results.

14) Moisture samples should be taken at regular intervals. At this time, a visual inspection of the dryer should be made, checking the temperature and feedroll operation. Make sure all columns are flowing by observing grain flow on each side.
15) For further information regarding the automatic metering system refer to Section 9, Sequence 7B.

GRAIN DRYER PERFORMANCE CHART
CHART # 1

DRYING CAPACITY WET
BPH PER 1000 BPH-RATED
CAPACITY ON YELLOW CORN

	MOISTURE OF DRIED GRAIN %								
IN	**10**	**11**	**12**	**13**	**14**	**15**	**16**	**17**	**18**
13	870	1200	1900	-	-	-	-	-	-
14	740	930	1250	-	-	-	-	-	-
15	640	780	1000	1550	-	-	-	-	-
16	550	690	850	1200	1900	-	-	-	-
17	500	600	730	960	1400	-	-	-	-
18	450	530	650	800	1100	1600	-	-	-
19	410	480	570	710	910	1250	1800	-	-
20	380	440	510	630	770	1000	1350	1900	-
21	360	410	480	560	690	880	1100	1450	1900
22	340	380	440	510	620	760	920	1150	1450
23	320	360	410	470	560	680	800	1000	1200
24	300	340	390	440	510	610	720	850	1000
25	-	320	370	410	480	560	640	740	870
26	-	-	350	390	440	510	590	670	770
27	-	-	340	370	420	480	540	610	700
28	-	-	320	360	400	450	500	570	630
29	-	-	-	350	390	430	480	530	590
30	-	-	-	340	380	420	460	510	560

PLENUM TEMP	**F2**	**WET GRAIN TEMP**	**F3**	**GRAIN**	**F4**
140 F	.46	20 F	.74	CORN	1.0
150 F	.50	30 F	.78	SOYBEANS	1.0
160 F	.55	40 F	.82	MILO	.9
170 F	.61	50 F	.86	WHEAT	.8
180 F	.69	60 F	.91		
190 F	.77	70 F	1.00		
200 F	.88				
210 F	1.00				

HOW TO USE CHARTS TO FIGURE YOUR CAPACITY

$$\frac{\text{(DRYER RATED CAPACITY @ 20-15\%)}}{1000} \times \text{(BPH IN CHART 1)} \times F2 \times F3 \times F4$$

DRY GRAIN UNLOADING RATE – DP AND DPSL SERIES DRYERS

D.C. VOLTS = DRY UNLOAD RATE PER HOUR

MODEL:		10FT.	15FT.	20FT.	25FT.	30FT.	40FT.
D.C. VOLTS	RPM	DRY BU/HR	DRY BU/HR	DRY BU/HR	DRY BU/HR	DRY BU/HR	DRY BU/HR
10.0	1.22	64.15	96.23	128.30	160.38	192.46	256.61
11.0	1.34	70.57	105.85	141.13	176.42	211.71	282.27
12.0	1.46	76.98	115.47	153.96	192.46	230.95	307.93
13.0	1.58	83.40	125.10	166.80	208.49	250.20	333.59
14.0	1.70	89.81	134.72	179.63	224.53	269.44	359.25
15.0	1.82	96.23	144.34	192.46	240.57	288.69	384.91
16.0	1.94	102.64	153.96	205.29	256.61	307.93	410.57
17.0	2.07	109.06	163.59	218.12	272.65	327.18	436.23
18.0	2.19	115.47	173.21	230.95	288.68	346.42	461.89
19.0	2.31	121.89	182.83	243.78	304.72	365.67	487.56
20.0	2.43	128.30	192.46	256.61	320.76	384.92	513.22
21.0	2.55	134.72	202.08	269.44	336.80	404.16	538.88
22.0	2.67	141.13	211.70	282.27	352.84	423.41	564.54
23.0	2.79	147.55	221.32	295.10	368.87	442.65	590.20
24.0	2.92	153.96	230.95	307.93	384.91	461.90	615.86
25.0	3.04	160.38	240.57	320.76	400.95	481.14	641.52
26.0	3.16	166.80	250.19	333.59	416.99	500.39	667.18
27.0	3.28	173.21	259.82	346.42	433.03	519.64	692.84
28.0	3.40	179.63	269.44	359.25	449.06	538.88	718.55
29.0	3.52	186.04	279.06	372.08	465.10	558.13	744.16
30.0	3.65	192.46	288.68	384.91	481.14	577.37	769.82
31.0	3.77	198.87	298.31	397.74	497.18	596.62	795.48
32.0	3.89	205.29	307.93	410.57	513.22	615.86	821.15
33.0	4.01	211.70	317.55	423.40	529.25	635.11	846.81
34.0	4.13	218.12	324.18	436.23	545.29	654.35	872.47
35.0	4.25	224.53	336.80	449.06	561.33	673.60	898.13
36.0	4.37	230.95	346.42	461.89	577.37	692.85	923.79
37.0	4.50	237.36	356.04	474.72	593.41	712.09	949.45
38.0	4.62	243.78	365.67	487.56	609.44	731.34	975.11
39.0	4.74	250.19	375.29	500.39	625.48	750.58	1000.77
40.0	4.86	256.61	384.91	513.22	641.52	769.83	1026.43

DRY GRAIN UNLOADING RATE – DP AND DPSL SERIES DRYERS

D.C. VOLTS = DRY UNLOAD RATE PER HOUR

MODEL:		10FT.	15FT.	20FT.	25FT.	30FT.	40FT.
D.C. VOLTS	RPM	DRY BU/HR	DRY BU/HR	DRY BU/HR	DRY BU/HR	DRY BU/HR	DRY BU/HR
41.0	4.98	263.02	394.53	526.05	657.56	789.07	1052.09
42.0	5.10	269.44	404.16	538.88	673.60	808.32	1077.75
43.0	5.22	275.85	413.78	551.71	689.63	827.56	1103.41
44.0	5.35	282.27	423.40	564.54	705.67	846.81	1129.08
45.0	5.47	288.68	433.03	577.37	721.71	866.06	1154.74
46.0	5.59	295.10	442.65	590.20	737.75	885.30	1180.40
47.0	5.71	301.51	452.27	603.03	753.79	904.55	1206.06
48.0	5.83	307.93	461.89	615.86	769.82	923.79	1231.72
49.0	5.95	314.34	471.52	628.69	785.86	943.04	1257.38
50.0	6.08	320.76	481.14	641.52	801.90	962.28	1283.04
51.0	6.20	327.18	490.76	654.35	817.94	981.53	1308.70
52.0	6.32	333.59	500.39	667.18	833.98	1000.78	1334.36
53.0	6.44	340.01	510.01	680.01	850.01	1020.02	1360.02
54.0	6.56	346.42	519.63	692.84	866.05	1039.27	1385.68
55.0	6.68	352.84	529.25	705.67	882.09	1058.51	1411.34
56.0	6.80	359.25	538.88	718.50	898.13	1077.76	1437.00
57.0	6.93	365.67	548.50	731.33	914.17	1097.00	1462.67
58.0	7.05	372.08	558.12	744.16	930.20	1116.25	1488.83
59.0	7.17	378.50	567.75	756.99	946.24	1135.49	1513.99
60.0	7.29	384.91	577.37	769.82	962.28	1154.74	1539.65
61.0	7.41	391.33	586.99	782.65	978.32	1173.99	1565.31
62.0	7.53	397.74	596.61	795.48	994.36	1193.23	1590.97
63.0	7.65	404.16	606.24	808.32	1010.39	1212.48	1616.63
64.0	7.78	410.57	615.86	821.15	1026.43	1231.72	1642.29
65.0	7.90	416.99	625.48	833.98	1042.47	1250.97	1667.95
66.0	8.02	423.40	635.10	846.81	1058.51	1270.21	1693.61
67.0	8.14	429.82	644.73	859.64	1074.55	1289.46	1719.27
68.0	8.26	436.23	654.35	872.47	1090.58	1308.75	1744.93
69.0	8.38	442.65	663.97	885.30	1106.62	1327.95	1770.60
70.0	8.51	449.06	673.60	898.13	1122.66	1347.20	1796.26

DRY GRAIN UNLOADING RATE – DP AND DPSL SERIES DRYERS

D.C. VOLTS = DRY UNLOAD RATE PER HOUR

MODEL:		10FT.	15FT.	20FT.	25FT.	30FT.	40FT.
D.C. VOLTS	RPM	DRY BU/HR	DRY BU/HR	DRY BU/HR	DRY BU/HR	DRY BU/HR	DRY BU/HR
71.0	8.63	455.48	683.22	910.96	1138.70	1366.44	1821.92
72.0	8.75	461.89	692.84	923.79	1154.74	1385.69	1847.58
73.0	8.87	468.31	702.46	936.62	1170.77	1404.93	1873.24
74.0	8.99	474.72	712.09	949.45	1186.81	1424.18	1898.90
75.0	9.11	481.14	721.71	962.28	1202.85	1443.42	1924.56
76.0	9.23	487.56	731.33	975.11	1218.89	1462.67	1950.22
77.0	9.36	493.97	740.96	987.94	1234.93	1481.92	1975.88
78.0	9.48	500.39	750.58	1000.77	1250.96	1501.16	2001.54
79.0	9.60	506.80	760.20	1013.60	1267.00	1520.41	2027.20
80.0	9.72	513.22	769.82	1026.43	1283.04	1539.65	2052.86
81.0	9.84	519.63	779.45	1039.26	1299.08	1558.90	2078.52
82.0	9.96	526.05	789.07	1052.09	1315.12	1578.14	2104.19
83.0	10.08	532.46	798.69	1064.92	1331.15	1597.39	2129.85
84.0	10.21	538.88	808.32	1077.75	1347.19	1616.63	2155.51
85.0	10.33	545.29	817.97	1090.58	1363.23	1635.88	2181.17
86.0	10.45	551.71	827.56	1103.41	1379.27	1655.13	2206.83
87.0	10.57	558.12	837.18	1116.24	1395.31	1674.37	2232.49
88.0	10.69	564.54	846.81	1129.08	1411.34	1693.62	2258.15
89.0	10.81	570.95	856.43	1141.91	1427.38	1712.86	2283.81
90.0	10.94	577.37	866.05	1154.74	1443.42	1732.11	2309.47

SPECIAL CHART: DRIVE SPROCKET: 4012 DRIVEN SPROCKET: 4032

MODEL	VOLT	(=)	RPM	DRY BU. / MIN.	DRY BU. / HR
10 FT.	1	(=)	.1215	.1069	6.4150
15 FT.	1	(=)	.1215	.1604	9.6230
20 FT.	1	(=)	.1215	.2138	12.8300
25 FT.	1	(=)	.1215	.2673	16.0380
30 FT.	1	(=)	.1215	.3208	19.2460
40 FT.	1	(=)	.1215	.4277	25.6610

Alarm, Limit, Indication & Error Messages

Indication	Description	Possible Causes	Corrective Action
Alarm won't clear or reset	Alarm will not clear or reset with keypad or digital input	• Alarm latching is active • Alarm set to incorrect output • Alarm is set to incorrect source • Sensor input is out of alarm set point range • Alarm set point is incorrect • Alarm is set to incorrect type • Digital input function is incorrect	• Reset alarm when process is within range or disable latching • Set output to correct alarm source instance • Set alarm source to correct input instance • Correct cause of sensor input out of alarm range • Set alarm set point to correct trip point • Set alarm to correct type: process, deviation or power • Set digital input function and source instance
Alarm won't occur	Alarm will not activate output	• Alarm silencing is active • Alarm blocking is active • Alarm is set to incorrect output • Alarm is set to incorrect source • Alarm set point is incorrect • Alarm is set to incorrect type	• Disable alarm silencing, if required • Disable alarm blocking, if required • Set output to correct alarm source instance • Set alarm source to correct input instance • Set alarm set point to correct trip point • Set alarm to correct type: process, deviation or power
AlE1 Alarm Error AlE2 AlE3 AlE4	Alarm state cannot be determined due to lack of sensor input	• Sensor improperly wired or open • Incorrect setting of sensor type • Calibration corrupt	• Correct wiring or replace sensor • Match setting to sensor used • Check calibration of controller
AlL1 Alarm Low AlL2 AlL3 AlL4	Sensor input below low alarm set point	• Temperature is less than alarm set point • Alarm is set to latching and an alarm occurred in the past • Incorrect alarm set point • Incorrect alarm source	• Check cause of under temperature • Clear latched alarm • Establish correct alarm set point • Set alarm source to proper setting
AlH1 Alarm High AlH2 AlH3 AlH4	Sensor input above high alarm set point	• Temperature is greater than alarm set point • Alarm is set to latching and an alarm occurred in the past • Incorrect alarm set point • Incorrect alarm source	• Check cause of over temperature • Clear latched alarm • Establish correct alarm set point • Set alarm source to proper setting
Er1 Error Input	Sensor does not provide a valid signal to controller	• Sensor improperly wired or open • Incorrect setting of sensor type • Calibration corrupt	• Correct wiring or replace sensor • Match setting to sensor used • Check calibration of controller

LPo1 Loop Open Error	Open Loop Detect is active and the process value did not deviate by a user-selected value in a user specified period.	• Setting of Open Loop Detect Time incorrect • Setting of Open Loop Detect Deviation incorrect • Thermal loop is open • Open Loop Detect function not required but activated	• Set correct Open Loop Detect Time for application • Set correct Open Loop Deviation value for application • Determine cause of open thermal loop: misplaced sensors, load failure, loss of power to load, etc. • Deactivate Open Loop Detect feature
LPr1 Loop Reversed Error	Open Loop Detect is active and the process value is headed in the wrong direction when the output is activated based on deviation value and user-selected value.	• Setting of Open Loop Detect Time incorrect • Setting of Open Loop Detect Deviation incorrect • Output programmed for incorrect function • Thermocouple sensor wired in reverse polarity	• Set correct Open Loop Detect Time for application • Set correct Open Loop Deviation value for application • Set output function correctly • Wire thermocouple correctly, (red wire is negative)
rP1 Ramping 1	Controller is ramping to new set point	• Ramping feature is activated	• Disable ramping feature if not required
tUn1 Autotuning 1	Controller is autotuning the control loop	• User started the autotune function • Digital input is set to start autotune	• Wait until autotune completes or disable autotune feature • Set digital input to function other than autotune, if desired
No heat/cool action	Output does not activate load	• Output function is incorrectly set • Control mode is incorrectly set • Output is incorrectly wired • Load, power or fuse is open • Control set point is incorrect • Incorrect controller model for application	• Set output function correctly • Set control mode appropriately (Open vs Closed Loop) • Correct output wiring • Correct fault in system • Set control set point in appropriate control mode and check source of set point: remote, idle, profile, closed loop, open loop • Obtain correct controller model for application
No Display	No display indication or LED illumination	• Power to controller is off • Fuse open • Breaker tripped • Safety interlock switch open • Separate system limit control activated • Wiring error • Incorrect voltage to controller	• Turn on power • Replace fuse • Reset breaker • Close interlock switch • Reset limit • Correct wiring issue • Apply correct voltage, check part number
No Serial Communication	Cannot establish serial communications with the controller	• Address parameter incorrect • Incorrect protocol selected • Baud rate incorrect • Parity incorrect • Wiring error • EIA-485 converter issue • Incorrect computer or PLC communications port • Incorrect software setup • Termination resistor may be required	• Set unique addresses on network • Match protocol between devices • Match baud rate between devices • Match parity between devices • Correct wiring issue • Check settings or replace converter • Set correct communication port • Correct software setup to match controller • Place 120 Ω resistor across EIA-485 on last controller

Indication	Description	Possible Causes	Corrective Action
Process doesn't control to set point	Process is unstable or never reaches set point	• Controller not tuned correctly • Control mode is incorrectly set • Control set point is incorrect	• Perform autotune or manually tune system • Set control mode appropriately (Open vs Closed Loop) • Set control set point in appropriate control mode and check source of set point: remote, idle, profile, closed loop, open loop
Temperature runway	Process value continues to increase or decrease past set point.	• Controller output incorrectly programmed • Thermocouple reverse wired • Controller output wired incorrectly • Short in heater • Power controller connection to controller defective • Controller output defective	• Verify output function is correct (heat or cool) • Correct sensor wiring (red wire negative) • Verify and correct wiring • Replace heater • Replace or repair power controller • Replace or repair controller
100 Device Error rEEo	Controller displays internal malfunction message at power up.	• Controller defective	• Replace or repair controller
Menus inaccessible	Unable to access SEt, OPEr, FCtY or ProF menus or particular prompts in Home Page	• Security set to incorrect level • Digital input set to lockout keypad • Custom parameters incorrect	• Check lockout setting in Factory Page • Change state of digital input • Change custom parameters in Factory Page
EZ-Key doesn't work	EZ-Key does not activate required function	• EZ-Key function incorrect • EZ-Key function instance not incorrect • Keypad malfunction	• Verify EZ-Key function in Setup Menu • Check that the function instance is correct • Replace or repair controller

Clearing Errors & Limit Messages

To clear error or limit messages press the RESET key. You may also turn main panel power “OFF” and back “ON” again. Error or Limit messages will not clear until the cause or reason for the error has been addressed.

Watlow EZ-ZONE Moisture Controller - Configuration Record

Operations Page



To reach the Operations page hold the "up" and "down" arrow keys together for **3 seconds**.

Menu	Instance	Parameter	Factory Setting	DELUX Setting	Parameter Description
A1					**Analog Input**
		AIn	**	**	View the process value
		iEr	**	**	View the cause of the most recent error
		iCA	0	0	Defines calibration offset
Mon					**Monitor**
		CMdA	**	**	View the active control mode
		CPr	**	**	View the current cool output level
		CSP	**	**	View the set point currently in effect
		PuA	**	**	View the current filtered process value using the control input
Loop					**Loop**
		CMd	AUto	AUto	Selects the method that this loop will use to control
		AtSP	90	90	Defines the the setpoint autotune will use as % of current setpoint
		AUt	no	no	Initiates the autotune process
		CSP	75	75	Defines the setpoint the controller will use in PID funtion
		idS	75	115	Defines a new PID setpoint if high limit is reached
		CPb	25	*55	Defines the proportianl band for the cool output
		ti	180	0	Defines the PID intergral for the output
		td	0	0	Defines the PID derivative time for the output
		db	0	0	Defines the offset to the proportional band
		oSP	0	-27.0	Defines a fixed level of output power when in manual mode
ALM1	1				**Alarm 1**
		ALo	32.0	32.0	Defines the low range of alarm instance
		AHi	300.0	300.0	Defines the high range of the alarm instance
	2				**Alarm 2**
		ALo	32.0	32.0	Defines the low range of alarm instance
		AHi	300.0	300.0	Defines the high range of the alarm instance
	3				**Alarm 3**
		ALo	32.0	32.0	Defines the low range of alarm instance
		AHi	300.0	300.0	Defines the high range of the alarm instance
	4				**Alarm 4**
		ALo	32.0	32.0	Defines the low range of alarm instance
		AHi	300.0	300.0	Defines the high range of the alarm instance

Watlow EZ-ZONE Moisture Controller - Configuration Record

Setup Page



To reach the Setup page hold the "up" and "down" arrow keys together for **6 seconds**.

Menu	Instance	Parameter	Factory Setting	DELUX Setting	Parameter Description
Ai					**Analog Input**
		SEn	tC	r0.1K	Selects the type of sensor used
		rtL	2	3	Selects the leads in sensor
		FiL	0.5	10	Filters erratic signal, for smoother PID calculations
		iEr	oFF	oFF	Forces manual clear of input errrors
		dEC	0	0.0	Selects precision of displayed units
LooP					**PID Loop**
		hAG	Pid	oFF	Selects the heat control method
		CAG	oFF	Pid	Selects the cool control method
		CCr	oFF	oFF	Enables or disables cool output curve
		tEUn	no	no	Enables or disable TRU-TUNE+ adaptive tune automatically
		tAGr	Cr iE	Cr iE	Selects the aggressiveness of the autotune funtion
		UFA	USEr	MAn	Selects what output will do when user switches to manual mode
		FAiL	USEr	MAn	Selects what ouput will do when an input error switches control to manual mode
		MAn	0.0	-27.0	Defines the default manual output power if user swiches control or fault
		LdE	no	no	Enables or disables open-loop detction feature to monitor closed-loop operations
		rP	oFF	oFF	Selects when controller will ramp to setpoint
		LSP	-1999	0.0	Defines the lower range of the PID setpoint (temperature in automatic mode)
		hSP	9999	300.0	Defines the upper range of the PID setpoint (temperature in automatic mode)
		SPLo	-100	-100	Defines the lower range of the PID setpoint (% output in manual mode)
		SPHi	100	100	Defines the upper range of the PID setpoint (% output in manual mode)
oUPt					**Output**
		oty	voLt	voLt	Selects the type of output
		Fn	hEAt	CooL	Selects which function will drive output
		Fi	1	1	Selects the instance of the function selected above
		SLo	0.00	0.00	Defines the lower range of the scale for the universal process output
		SHi	10.00	8.00	Defines the upper range of the scale for the universal process output
		oLo	0	0	Defines the low power scale, output will never be less than the value specified
		oHi	100	100	Defines the high power scale, output will never be less than the value specified
		oCA	0.0	0.0	Defines an offset value to the process output
ALM1	1				**Alarm 1**
		AtY	oFF	oFF	Selects whether the alarm trigger is a fixed value or will track set point
	2				**Alarm 2**
		AtY	oFF	oFF	Selects whether the alarm trigger is a fixed value or will track set point
	3				**Alarm 3**
		AtY	oFF	oFF	Selects whether the alarm trigger is a fixed value or will track set point
	4				**Alarm 4**
		AtY	oFF	oFF	Selects whether the alarm trigger is a fixed value or will track set point
FUn					**Function**
		LEu	hiGh	hiGh	Selects the state in which the EZ key is in when powered up
		Fn	nonE	nonE	Selects the funtion of the EZ key
		Fi	0	0	Selects which instance the EZ key will affect
GLbL					**Global**
		CF	F	F	Selects the unit of measurement
		ACLF	60	60	Selects the AC line frequency
CoM1					**Communications**
		Ad5	1	1	Sets the network address of this controller
		CF	F	F	Selects UOM in which this communications channel will display
		nU5	YES	YES	Determines whether all values written to control will be saved in EEPROM

Watlow EZ-ZONE Moisture Controller - Configuration Record

Factory Page



To reach the Factory page hold the "RESET" and "Advance" arrow keys together for **6 seconds**.

Menu	Instance	Parameter	Factory Setting	DELUX Setting	Parameter Description
CUSt	1				**Custom 1**
		PAr	AC.Pu	AC.Pu	Defines custom parameter to home page
	2				**Custom 2**
		PAr	AC.SP	AC.SP	Defines custom parameter to home page
	3				**Custom 3**
		PAr	AC.Pu	CP7	Defines custom parameter to home page
	4				**Custom 4**
		PAr	AC.SP	CPb	Defines custom parameter to home page
	5				**Custom 5**
		PAr	CP7	CPr	Defines custom parameter to home page
	6				**Custom 6**
		PAr	hPr	nonE	Defines custom parameter to home page
	7				**Custom 7**
		PAr	CPr	nonE	Defines custom parameter to home page
	8				**Custom 8**
		PAr	AUt	nonE	Defines custom parameter to home page
	9				**Custom 9**
		PAr	idLE	nonE	Defines custom parameter to home page
	10				**Custom 10**
		PAr	CP7	nonE	Defines custom parameter to home page
	11				**Custom 11**
		PAr	hPr	nonE	Defines custom parameter to home page
	12				**Custom 12**
		PAr	CPr	nonE	Defines custom parameter to home page
	13				**Custom 13**
		PAr	AUt	nonE	Defines custom parameter to home page
	14				**Custom 14**
		PAr	idLE	nonE	Defines custom parameter to home page
	15				**Custom 15**
		PAr	nonE	nonE	Defines custom parameter to home page
	16				**Custom 16**
		PAr	nonE	nonE	Defines custom parameter to home page
	17				**Custom 17**
		PAr	nonE	nonE	Defines custom parameter to home page
	18				**Custom 18**
		PAr	nonE	nonE	Defines custom parameter to home page
	19				**Custom 19**
		PAr	nonE	nonE	Defines custom parameter to home page
	20				**Custom 20**
		PAr	nonE	nonE	Defines custom parameter to home page
LoC					**Lock**
		LoCo	2	2	Changes the security level of the operations page
		PASE	oFF	oFF	Enables or disables security features
		rLoC	5	5	Sets the read security clearance level
		SLoc	5	5	Sets the write security clearance level
diAG					
		Pn	**	**	Part number of device
		rEu	**	**	Software revision number
		SbLd	**	**	Software build number

Menu	Instance	Parameter	Factory Setting	DELUX Setting	Parameter Description
		Sn	**	**	Serial number of device
		dAtE	**	**	Date of manufacture
		USr.r	nonE	nonE	Restore user/default settings
		USr.S	nonE	nonE	Save current user settings
		C.LEd	both	both	Turns communications LED on or off for selected ports
		ZonE	on	on	Turns zone LED on or off based on selection
		chAn	on	on	Turns channel LED on or off based on selection
		d.Pr5	2	2	Defines the number of display pairs
CAL					**Calibration**
		rAw	**	**	View the raw electrical value for this input in units of sensor
		EL.Lo	1.000	1.000	Defines the value to calibrate the low end of the input range
		EL.o.o	0.00	0.00	Defines the value to calibrate the low end of the output range
		EL.o.S	1.000	1.000	Defines the value to calibrate the slope of the output value

SYSTEM OPERATION

1. **A CLEAN DRYER IS AN EFFICIENT DRYER. THOROUGH INSPECTION AND CLEANING, IF NECESSARY, OF THE PLENUM HEAT CHAMBER AND VACUUM COOLING CHAMBER IS RECOMMENDED EVERY 24 HOURS OF OPERATION.** CLEAN SCREENS ON INSIDE OF PLENUM HEAT CHAMBER, THEN REMOVE DUST AND FOREIGN MATERIAL FROM PLENUM FLOOR. IT IS SUGGESTED YOU COVER THE FAN AND BURNER OUTLETS TO REDUCE AMOUNT OF FOREIGN MATERIAL FALLING INTO BACK OF FAN HUBS AND BURNER RINGS.

   CHECK THE OUTSIDE SCREENS OF THE COOLING SECTION AND CLEAN IF NECESSARY. INSPECT AND CLEAN COOLING CHAMBER IF NECESSARY. THE AREA AROUND DRYER SHOULD ALSO BE KEPT CLEAN.

2. FOR MAXIMUM CAPACITY, FRESH-AIR INTAKE PORT DOORS SHOULD BE OPENED TO MAXIMUM. IF THE GRAIN IS WARMER THAN DESIRED AS IT DISCHARGES FROM THE DRYER, THE DOOR OPENINGS MAY BE DECREASED UNTIL DESIRED GRAIN TEMPERATURE IS ACHIEVED. **NEVER CLOSE TO LESS THAN A ONE (1) INCH OPENING DURING OPERATION. ALL DOORS SHOULD BE SET WITH APPROXIMATELY THE SAME SIZE OPENING.**

   WE RECOMMEND ALL FRESH-AIR INTAKE DOORS BE CLOSED AT THE END OF EACH DRYING SEASON.

3. FUEL SUPPLY TO DRYER SHOULD BE **"SHUT OFF"** AFTER EACH DRYING SEASON.

4. **IF THE DRYER ELECTRICAL CONTROL BOX IS EQUIPPED WITH A MASTER CIRCUIT BREAKER WHICH SUPPLIES POWER FOR ALL DRYER OPERATIONS, THE CIRCUIT BREAKER SHOULD BE "OFF" WHEN SERVICING AND CLEANING DRYER.**

5. DRYERS HAVING MORE THAN ONE(1) FAN MOTOR IS STARTED, THERE IS A 3 TO 4 SECOND DELAY BETWEEN EACH MOTOR. THIS STEP-SPACING IS TO MINIMIZE STARTING LOAD. AFTER ALL FANS ARE STARTED, POWER IS APPLIED TO THE PURGE TIMER.

   THE 60 SECOND PURGE CYCLE ASSURES THAT A FLAME CANNOT BE IGNITED BEFORE THE PLENUM CHAMBER HAS BEEN THOROUGHLY PURGED(5 TIMES).

6. AT THE END OF THE 60 SECOND PURGE CYCLE, A BURNER READY LIGHT WILL APPEAR IF ALL CIRCUITS ARE COMPLETED.

7. IF FLAME IS NOT DETECTED IN FIFTEEN(15) SECONDS, THE FLAME CONTROL WILL SHUTDOWN ALL SYSTEMS, INCLUDING THE PANEL POWER INTERLOCK. IT WILL THEN BE NECESSARY TO RESTART COMPLETE SYSTEM.

8. THE BURNER NOW BRINGS THE PLENUM TEMPERATURE TO DESIRED THERMOSTAT SETTING. THE TEMPERATURE CONTROLLER WILL MODULATE THE FUEL SUPPLY TO THE BURNER TO MAINTAIN TEMPERATURE AT SET POINT. THIS PREVENTS OVERHEATING OF THE PLENUM CHAMBER **(CHECK HIGH LIMIT SETTING BEFORE EACH DRYING SEASON**).

9. PLENUM TEMPERATURE THERMOSTAT AND "MOISTURE CONTROL THERMOSTAT" SETTINGS WILL VARY ACCORDING TO THE TYPE OF GRAIN BEING DRIED.

10. THE MOISTURE SYSTEM BECOMES FULLY AUTOMATIC AFTER INITIAL CALIBRATION. AS PERCENT OF MOISTURE IN THE GRAIN VARIES, SO DOES THE SPEED OF DISCHARGE. HIGHER MOISTURE RESULTS IN LOWER EXHAUST TEMPERATURE AND DECREASES DISCHARGE SPEED. LOWER MOISTURE RESULTS IN HIGHER EXHAUST TEMPERATURE AND INCREASES DISCHARGE SPEED.

SYSTEM SEQUENCE ANALYSIS

DP, DPSL, DPX, DPXSL, DPX4T, DPX8T AND DPX12T SERIES MODELS

STARTING WITH 2010 MODELS

TABLE OF CONTENTS

SEQUENCE		PAGE #
1A.	MAIN CIRCUIT BREAKER "ON" * (240V-3P SYSTEMS ONLY) *	1
1B.	MAIN CIRCUIT BREAKER "ON" * (380V,480V,575V-3P SYSTEMS ONLY) *	2
2.	POWER SWITCH (SW1) TO "ON", ENERGIZING SAFETY CIRCUIT	3
3.	FAN SWITCH (SW2) TO "ON", HOLD UNTIL ALL FANS ARE OPERATIONAL.	6
4.	BURNER SWITCH (SW3) TO "ON", ENERGIZING BURNER CIRCUIT	9
5A.	LOAD SWITCH (SW4) TO "ON", ENERGIZING LOAD CIRCUIT. LEVELING AUGER SYSTEM (STANDARD)	14
5B.	LOAD SWITCH (SW4) TO "ON", ENERGIZING LOAD CIRCUIT. GRAVITY FLOW WITHOUT HIGH AND LOW BIN SWITCHES. (OPTIONAL)	17
5C.	LOAD SWITCH (SW4) TO "ON", ENERGIZING LOAD CIRCUIT. GRAVITY FLOW WITH HIGH AND LOW BIN SWITCHES. (OPTIONAL)	18
6.	UNLOAD SWITCH (SW5) TO "ON", ENERGIZING UNLOAD CIRCUIT.	21
7A.	METERING SELECTOR SWITCH (SW6) TO "MAN" ENERGIZING METERING SYSTEM CIRCUIT.	23
7B.	METERING SELECTOR SWITCH (SW6) TO "AUT". ENERGIZING METERING SYSTEM CIRCUIT.	26
8.	**DRYER VIBRATION CAUSE AND PREVENTON**.	30

SYSTEM SEQUENCE ANALYSIS

DP, DPSL, DPX, DPXSL, DPX4T, DPX8T AND DPX12T SERIES MODELS

STARTING WITH 2010 MODELS
(GENERIC SCHEMATIC #900-009130)

1A. SEQUENCE: MAIN CIRCUIT BREAKER "ON" * (240V-3P SYSTEMS ONLY) *

ACTION: MAIN POWER LIGHT "ON", APPLIES POWER TO HIGH VOLTAGE CIRCUITS AND 120V CONTROL CIRCUIT BREAKER (CB1).

SYMPTOMS:
A. NO MAIN POWER LIGHT (DS1).
B. CONTROL CIRCUIT BREAKER (CB1) HAS TRIPPED.

POSSIBLE CAUSES:
A1. DEFECTIVE MAIN POWER LIGHT (DS1).
A2. DEFECTIVE CONTROL CIRCUIT BREAKER (CB1).
A3. DEFECTIVE FUSE IN MAIN CIRCUIT BREAKER.
A4. MISSING 120 VOLT WIRE.

B1. SHORT CIRCUIT.
B2. OVERLOAD CONDITION HAS OCCURED.
B3. DEFECTIVE FUSE BLOCK.
B4. LOOSE LUGS ON FUSE BLOCKS, LOOSE OR SHORTED HIGH VOLTAGE CIRCUITS ON MOTOR STARTERS, TRANSFORMERS, ETC.

CORRECTIVE ACTION:
A1. CHECK TERMINAL #25 FOR 120 VOLTS. IF POWER IS PRESENT THE MAIN POWER LIGHT (DS1) IS DEFECTIVE, REPLACE.

A2. CHECK CIRCUIT BREAKER (CB1) FOR FAULT.

A3. CHECK ACROSS L1 & L3 ON THE MAIN POWER DISTRIBUTION BLOCK. IF 240 VOLTS IS NOT PRESENT, CHECK MAIN CIRCUIT BREAKER FOR POWER AND IF FUSES ARE DEFECTIVE, REPLACE. (WILD LEG IS ON L2)

A4. IF VOLTAGE IS PRESENT ACROSS L1 & L3 ON THE MAIN POWER DISTRIBUTION BLOCK, CHECK TO SEE IF THE BLACK WIRE IS CONNECTED FROM L1 ON THE MAIN POWER DISTRIBUTION BLOCK TO THE POSITIVE SIDE ON THE 120V PANEL POWER DISTRIBUTION BLOCK (TB2). ALSO CHECK TO SEE THAT THE GROUND LEAD (WHITE WIRE) IS CONNECTED TO THE COMMON LEAD OF THE INCOMING POWER SOURCE AND RUN TO CHASSIS GROUND.

B1. REPAIR OR REPLACE BURNED OR BARE WIRING IN CONTACT WITH CHASSIS OR OTHER WIRING.

B2. CHECK CURRENT FOR ANY OVERLOAD CONDITIONS AND CORRECT.

B3. INSPECT FUSE BLOCKS FOR DAMAGE. REPAIR OR REPLACE.

B4. CHECK LUG CONNECTIONS, TIGHTEN OR REPLACE.

1B. SEQUENCE: MAIN CIRCUIT BREAKER "ON" *(380V,480V,575V-3P SYSTEMS)*

ACTION: MAIN POWER LIGHT "ON", APPLIES POWER TO HIGH VOLTAGE CIRCUITS, STEP DOWN TRANSFORMER (XMFR5) AND 120V CONTROL CIRCUIT BREAKER (CB1).

SYMPTOMS:
A. NO MAIN POWER LIGHT (DS1).
B. CONTROL CIRCUIT BREAKER (CB1) HAS TRIPPED.

POSSIBLE CAUSES:
A1. DEFECTIVE MAIN POWER LIGHT (DS1).
A2. DEFECTIVE CONTROL CIRCUIT BREAKER (CB1).
A3. DEFECTIVE FUSE IN MAIN CIRCUIT BREAKER.
A4. DEFECTIVE FUSES F1 AND/OR F2.
A5. DEFECTIVE TRANSFORMER (XMFR5).

B1. SHORT CIRCUIT.
B2. OVERLOAD CONDITION.
B3. DEFECTIVE FUSE BLOCK.
B4. LOOSE LUGS ON FUSE BLOCKS, LOOSE OR SHORTED HIGH VOLTAGE CIRCUITS ON MOTOR STARTERS, TRANSFORMERS, ETC.

CORRECTIVE ACTION:
A1. CHECK TERMINAL #25 FOR 120 VOLTS. IF POWER IS PRESENT THE MAIN POWER LIGHT (DS1) IS DEFECTIVE, REPLACE.

A2. CHECK CONTROL CIRCUIT BREAKER (CB1), IF DEFECTIVE, REPLACE.

A3. CHECK ACROSS L1 & L3 ON THE MAIN POWER DISTRIBUTION BLOCK. IF LINE VOLTAGE IS NOT PRESENT, CHECK MAIN CIRCUIT BREAKER FOR POWER. IF FUSES ARE DEFECTIVE, REPLACE. (WILD LEG ON L2)

A4. CHECK TO SEE IF VOLTAGE IS PRESENT ON L1-POS AND L2-NEU (120 VOLTS) ON THE 120 VOLT PANEL POWER DISTRIBUTION BLOCK (TB2). IF POWER IS NOT PRESENT CHECK FUSE F1 AND F2 IF DEFECTIVE, REPLACE.

A5. IF FUSE F1 AND F2 ARE OKAY AND NO VOLTAGE IS PRESENT ON L1-POS AND L2-NEU (120 VOLTS) ON THE 120 VOLT PANEL POWER DISTRIBUTION BLOCK (TB2) THE STEP DOWN TRANSFORMER (XMFR 5) IS DEFECTIVE, REPLACE.

B1. REPAIR OR REPLACE BURNED OR BARE WIRING IN CONTACT WITH CHASSIS OR OTHER WIRING.

B2. CHECK CURRENT FOR ANY OVERLOAD CONDITIONS AND CORRECT.

B3. INSPECT FUSE BLOCKS FOR DAMAGE. REPAIR OR REPLACE.

B4. CHECK LUG CONNECTIONS, TIGHTEN OR REPLACE.

2. SEQUENCE: POWER SWITCH (SW1) TO "ON", ENERGIZING SAFETY CIRCUIT.

ACTION: SAFETY CIRCUIT PROVEN LIGHT "ON" (DS11), ALL SAFETY CIRCUIT MONITOR LIGHTS "ON" (DS2 – DS8), APPLIES POWER TO ENTIRE 120 VOLT CIRCUIT AND ENERGIZES POWER RELAY (K8).

SAFETY CIRCUIT MONITOR LIGHTS

HOW THEY WORK!

SAFETY CIRCUIT MONITOR LIGHTS (DS2 – DS8) INDICATE WHAT PART OF THE SAFETY CIRCUIT IS WORKING. TO FIND THE PROBLEM, PRESS THE POWER SWITCH (SW1) TO THE "ON" POSITION AND HOLD. FIND THE FIRST LIGHT THAT IS NOT "ON". THAT WILL SHOW THE DEVICE THAT IS NOT ALLOWING THE SAFETY CIRCUIT TO LOCK IN.

*** PLACE ALL SWITCHES IN "OFF" POSITION BEFORE TROUBLE SHOOTING ***

SYMPTOMS:
- A. NO SAFETY CIRCUIT PROVEN LIGHT (DS11) WHEN THE POWER SWITCH (SW1) IS ENGAGED, BUT SOME OF THE SAFETY CIRCUIT MONITOR LIGHTS (DS2 – DS8) WILL LIGHT WHEN THE POWER SWITCH (SW1) IS ENGAGED BUT WILL GO "OFF" WHEN THE POWER SWITCH (SW1) IS RELEASED.
- B. SAFETY CIRCUIT PROVEN LIGHT (DS11) "ON" WHEN THE POWER SWITCH (SW1) IS ENGAGED BUT WILL GO "OFF" WHEN THE POWER SWITCH (SW1) IS RELEASED.

POSSIBLE CAUSES:
- A1. DEFECTIVE POWER SWITCH (SW1).
- A2. NO PLENUM HIGH LIMIT LIGHT (DS2), DEFECTIVE HIGH LIMIT OR HIGH LIMIT TRIPPED FROM EXCESSIVE HEAT IN PLENUM CHAMBER.
- A3. NO FAN OVERLOAD LIGHT (DS3), DEFECTIVE FAN OVERLOAD DEVICE (S2, S3, S4, S4), OR STARTER OVERLOAD TRIPPED FROM A FAN MOTOR DRAWING HIGH AMPERAGE.
- A4. NO CONVEYOR OVERLOAD LIGHT (DS4), DEFECTIVE CONVEYOR OVERLOAD DEVICE (S5, S6, S7, S8), OR STARTER OVERLOAD TRIPPED FROM AN AUGER DRAWING HIGH AMPERAGE.
- A5. NO FEEDROLL MONITOR LIGHT (DS5), DEFECTIVE FEEDROLL MONITOR SWITCH (SW8) OR CAM NUT, TIMER RELAY (K10, K11), ON/OFF SELECTOR SWITCH (SW7) OR SELECTOR SWITCH (SW7) IN "ON" POSITION WHEN TRYING TO START DRYER.
- A6. NO DISCHARGE OVERFLOW LIGHT (DS6), DEFECTIVE DISCHARGE OVERFLOW SWITCH OR PADDLE IS LOOSE OR OVERFLOW CONDITION HAS TRIPPED SWITCH.
- A7. NO EXHAUST TEMPERATURE LIMIT LIGHT (DS7), DEFECTIVE EXHAUST LIMIT OR LIMIT HAS TRIPPED BECAUSE OF EXCESSIVE EXHAUST AIR TEMPERATURE.
- A8. NO AUXILIARY SAFETY LIGHT (DS8), *CUSTOMER INSTALLED.*
- A9. DEFECTIVE BURNER SWITCH (SW3).
- A10. DEFECTIVE POWER RELAY (K8).
- A11. DEFECTIVE SAFETY CIRCUIT PROVEN LIGHT (DS11).

B. DEFECTIVE FLAME SYSTEM BYPASS DELAY RELAY (K5).

CORRECTIVE ACTION:

A1. IF VOLTAGE IS PRESENT ON TERMINAL #25 (120 VOLTS) THEN CHECK FOR VOLTAGE ON TERMINAL #28 (120 VOLTS) WHILE HOLDING THE POWER SWITCH (SW1) IN THE "ON" POSITION. IF NO VOLTAGE IS PRESENT, THE POWER SWITCH (SW1) IS DEFECTIVE, REPLACE.

A2. IF VOLTAGE IS PRESENT ON TERMINAL #28 (120 VOLTS) THEN CHECK FOR VOLTAGE ON TERMINAL #29 (120 VOLTS) WHILE HOLDING THE POWER SWITCH (SW1) IN THE "ON" POSITION. IF NO VOLTAGE IS PRESENT, THE PLENUM HIGH LIMIT MAY HAVE TRIPPED FROM EXCESSIVE HEAT IN THE PLENUM CHAMBER, RESET. IF VOLTAGE IS PRESENT ON TERMINAL #29 (120 VOLTS) THE PLENUM HIGH LIMIT LIGHT (DS2) IS DEFECTIVE, REPLACE. *(FOR ALL MODELS, REFER TO THE "AUTOMATIC TEMPERATURE CONTROL" SECTION FOR OPERATION AND A TROUBLE SHOOTING GUIDE FOR THE TEMPERATURE/HIGH LIMIT SYSTEM)*

A3A. IF VOLTAGE IS PRESENT ON TERMINAL #29 (120 VOLTS) THEN CHECK FOR VOLTAGE ON TERMINAL #30 (120 VOLTS) WHILE HOLDING THE POWER SWITCH (SW1) IN THE "ON" POSITION. IF NO VOLTAGE IS PRESENT, ONE OR MORE FAN STARTER OVERLOADS (S1 THRU S4) MAY HAVE TRIPPED FROM A MOTOR DRAWING HIGH AMPERAGE. DETERMINE WHICH ONE IS OPEN. RESET DEFECTIVE OVERLOAD. IF VOLTAGE IS PRESENT ON TERMINAL #30 (120 VOLTS) THE FAN OVERLOAD LIGHT (DS3) IS DEFECTIVE, REPLACE. *IT WILL BE NECESSARY TO DETERMINE IF A SHORT CIRCUIT OR OVERLOAD CONDITION EXISTS IN THIS SYSTEM (A3A AND A3B) AND WHAT CORRECTIVE STEPS NEED TO BE TAKEN TO RESOLVE THIS CONDITION.*

A3B. IF VOLTAGE IS PRESENT ON TERMINAL #30 (120 VOLTS) THEN CHECK FOR VOLTAGE ON TERMINAL #31 (120 VOLTS) WHILE HOLDING THE POWER SWITCH (SW1) IN THE "ON" POSITION. IF NO VOLTAGE IS PRESENT, ONE OR MORE CONVEYOR STARTER OVERLOADS (S5 THRU S8) MAY HAVE TRIPPED FROM A MOTOR DRAWING HIGH AMPERAGE. DETERMINE WHICH ONE IS OPEN. RESET DEFECTIVE OVERLOAD. IF VOLTAGE IS PRESENT ON TERMINAL #31 (120 VOLTS) THE CONVEYOR OVERLOAD LIGHT (DS4) IS DEFECTIVE, REPLACE.

A4A. IF VOLTAGE IS PRESENT ON TERMINAL #31 (120 VOLTS) THEN CHECK FOR VOLTAGE ON TERMINAL #32 (120 VOLTS) WHILE HOLDING THE POWER SWITCH (SW1) IN THE "ON" POSITION. IF NO VOLTAGE IS PRESENT, THE FEEDROLL MONITOR CIRCUIT IS OPEN. FIRST CHECK TO SEE IF THE SELECTOR SWITCH (SW7) IS IN THE "OFF" POSITION. IF SELECTOR SWITCH (SW7) IS IN THE "ON" POSTION, RETURN TO "OFF" POSITION.

A4B. IF DRYER SHUTS DOWN WITHIN 15 TO 30 SECONDS WHEN FEEDROLL MONITOR SELECTOR SWITCH (SW7) IS "ON" AND METERING SYSTEM IS OPERATING, CHECK VOLTAGE (120 VOLTS) ON TERMINALS #62 AND #63. VOLTAGE SHOULD BE PRESENT ON EACH TERMINAL ABOUT EVERY 2 TO 4 SECONDS WHILE THE FEEDROLLS ARE TURNING. IF VOLTAGE IS NOT PRESENT ON BOTH TERMINALS CHECK FEEDROLL MONITOR SWITCH (SW8) FOR CORRECT OPERATION AND CAM NUT ADJUSTMENT LOCATED ON FEEDROLL SPROCKET. ADJUST CAM NUT OR REPLACE FEEDROLL MONITOR SWITCH (SW8). IF VOLTAGE IS PRESENT, CHECK THE TIME DELAY RELAYS (K10 & K11) FOR PROPER OPERATION AND SETTING (60 SEC.). SET TO 60 SECONDS OR REPLACE IF DEFECTIVE.

A5. IF VOLTAGE IS PRESENT ON TERMINAL #32 (120 VOLTS THEN CHECK FOR VOLTAGE ON TERMINAL #33 (120 VOLTS) WHILE HOLDING THE POWER SWITCH (SW1) IN THE "ON" POSITION. IF NO VOLTAGE IS PRESENT, CHECK THE DISCHARGE OVERFLOW SWITCH FOR CORRECT OPERATION AND CHECK TO SEE IF THE PADDLE IS LOOSE OR IF AN OVERFLOW CONDITION HAS TRIPPED THE SWITCH. TIGHTEN THE PADDLE, CLEAR THE OVERFLOW OR REPLACE THE SWITCH. IF VOLTAGE IS PRESENT ON TERMINAL #33 (120 VOLTS) THE DISCHARGE OVERFLOW LIGHT (DS6) IS DEFECTIVE, REPLACE.

A6. IF VOLTAGE IS PRESENT ON TERMINAL #33 (120 VOLTS) THEN CHECK FOR VOLTAGE ON TERMINAL #34 (120 VOLTS) WHILE HOLDING THE POWER SWITCH (SW1) IN THE "ON" POSITION. IF NO VOLTAGE IS PRESENT ONE OF THE EXHAUST TEMPERATURE LIMITS HAS TRIPPED BECAUSE OF EXCESSIVE EXHAUST AIR TEMPERATURE OR IS DEFECTIVE. WITH THE POWER SWITCH (SW1) HELD IN THE "ON" POSITION GO AROUND THE DRYER AND FIND WHICH IS THE FIRST LIGHT ON THE EXHAUST LIMIT BOXES THAT IS NOT LIT. THIS IS THE EXHAUST LIMIT OPENING THE CIRCUIT. CHECK VOLTAGE AT EXHAUST LIMIT. IF DEFECTIVE, REPLACE. IF VOLTAGE IS PRESENT ON TERMINAL #34 (120 VOLTS) THE EXHAUST TEMPERATURE LIMIT LIGHT (DS7) IS DEFECTIVE, REPLACE.

A7. THE AUXILIARY SAFETY LIGHT WOULD BE INSTALLED AS A SPECIAL OPTION AT THE CUSTOMERS REQUEST. IF VOLTAGE IS PRESENT ON TERMINAL #35 (120 VOLTS) THE AUXILIARY SAFETY LIGHT (DS8) IS DEFECTIVE, REPLACE.

A8. IF VOLTAGE IS PRESENT ON TERMINAL #35 (120 VOLTS) THEN CHECK FOR VOLTAGE ON TERMINAL #39 (120 VOLTS) WHILE HOLDING THE POWER SWITCH (SW1) IN THE "ON" POSITION AND WITH THE BURNER SWITCH (SW3) IN THE "OFF" POSITION. IF NO VOLTAGE IS PRESENT, THE BURNER SWITCH (SW3) IS DEFECTIVE, REPLACE.

A9. IF VOLTAGE IS PRESENT ON TERMINAL #39 (120 VOLTS) THEN CHECK FOR VOLTAGE ON TERMINAL #41 (120 VOLTS) WHILE HOLDING THE POWER SWITCH (SW1) IN THE "ON" POSITION. IF NO VOLTAGE IS PRESENT AND THE BURNER SWITCH (SW3) IS IN THE "OFF" POSITION, THE POWER RELAY (K8) IS DEFECTIVE, REPLACE.

A10. IF VOLTAGE IS PRESENT ON TERMINAL #41 (120 VOLTS) WHILE HOLDING THE POWER SWITCH (SW1) IN THE "ON" POSITION AND THE BURNER SWITCH (SW3) IS IN THE "OFF" POSITION, THE SAFETY CIRCUIT PROVEN LIGHT IS DEFECTIVE, REPLACE.

B. IF VOLTAGE IS PRESENT ON TERMINAL #41 (120 VOLTS) CHECK VOLTAGE AT TERMINAL #27 WITH POWER SWITCH (SW1) ENGAGED. IF POWER IS NOT PRESENT ON TERMINAL #27 THE FLAME SYSTEM BYPASS DELAY RELAY IS DEFECTIVE, REPLACE.

3. SEQUENCE: FAN SWITCH (SW2) TO "ON", HOLD UNTIL ALL FANS ARE OPERATIONAL.

ACTION: FAN(S) (S1, S2, S3, S4) START AND LOCK INTO OPERATION (5 SECONDS DELAY BETWEEN FANS ON MULTI FAN UNITS). ALL FAN PROVEN LIGHT(S) "ON" (DS30, DS31, DS32, DS33), AFTER A 10 SECOND DELAY THE PURGING LIGHT (DS34) WILL LIGHT AND AFTER 60 SECONDS THE BURNER READY LIGHT (DS26) WILL LIGHT.

NOTE: FAN NUMBER ONE (# 1) IS CLOSEST TO CONTROL PANEL.

NUMBER	FAN STARTER	OVERLOAD CONTATS	INTER-LOCK	FAN PROVEN LIGHT	FAN AIR SENSOR
FAN # 1	S1	S1	SW14	DS30	AS1
FAN # 2	S2	S2	SW15	DS31	AS2
FAN # 3	S3	S3	SW16	DS32	AS3
FAN # 4	S4	S4	SW17	DS33	AS4

SYMPTOMS:
A. DRYER SHUTS DOWN IMMEDIATELY OR DURING FAN(S) (S1, S2, S3, S4) STARTUP.
B. FAN(S) (S1, S2, S3, S4) WILL NOT LOCK INTO OPERATION WHEN FAN SWITCH (SW2) IS RELEASED.
C. SOME OR NONE OF THE FAN PROVEN LIGHT(S) (DS30, DS31, DS32, DS33) STAY LIT, AFTER THE FAN(S) (S1, S2, S3, S4) LOCK INTO OPERATION.
D. PURGING LIGHT (DS34) WILL NOT LIGHT.
E. BURNER READY LIGHT (DS26) WILL NOT LIGHT.

POSSIBLE CAUSES:
A1. OVERLOAD(S) ON FAN STARTER(S) (S1, S2, S3, S4), TRIPPED.
A2. FAN AIR SENSOR(S) (AS1, AS2, AS3, AS4), SHORTED.
A3. MISC. SHORT CIRCUIT(S) IN SYSTEM.

B1. DEFECTIVE FAN SWITCH (SW2).
B2. DEFECTIVE STARTER COIL (S1, S2, S3, S4).
B3. DEFECTIVE STARTER INTERLOCK (SW14, SW15, SW16, SW17).
B4. DEFECTIVE FAN TIMER (K13, K14, K15).

C1. INCORRECT FAN ROTATION.
C2. DEFECTIVE FAN AIR SENSOR (AS1).
DEFECTIVE FAN PROVEN LIGHT (DS30).
C3. DEFECTIVE FAN AIR SENSOR (AS2).
DEFECTIVE FAN PROVEN LIGHT (DS31).
C4. DEFECTIVE FAN AIR SENSOR (AS3).
DEFECTIVE FAN PROVEN LIGHT (DS32).
C5. DEFECTIVE FAN AIR SENSOR (AS4).
DEFECTIVE FAN PROVEN LIGHT (DS33).

D1. DEFECTIVE FAN SENSOR RELAY (K7).
DEFECTIVE PURGING LIGHT (DS34).

E1. DEFECTIVE PURGE RELAY (K9).
DEFECTIVE BURNER READY LIGHT (DS26).

CORRECTIVE ACTION:

NOTE: THE BURNER SWITCH (SW3) MUST BE IN "OFF" POSITION

A1. ONE OR MORE STARTER OVERLOADS (S1, S2, S3, S4) HAVE TRIPPED FROM A MOTOR DRAWING HIGH AMPERAGE. DETERMINE WHICH ONE IS OPEN. RESET DEFECTIVE OVERLOAD. IT WILL BE NECESSARY TO DETERMINE IF A SHORT CIRCUIT OR EXCESSIVE OVERLOAD CONDITION EXISTS IN THIS ISOLATED SYSTEM AND WHAT CORRECTIVE STEPS NEED TO BE TAKEN TO RESOLVE THIS CONDITION. OTHER POSSIBLE CAUSES COULD BE (1) BAD FAN MOTOR OVERLOAD MODULE, REPLACE. (2) FAN PITCH SET TO HIGH, REPITCH TO CORRECT SETTING. (3) INCORRECT SETTING ON OVERLOAD, SET OVERLOAD TO MOTOR FULL LOAD AMPS. (4) LOOSE WIRING CONNECTIONS ON TERMINALS, TIGHTEN.

A2. CHECK THE TERMINATIONS INSIDE THE FAN AIR SENSOR(S) (AS1, AS2, AS3, AS4) TO INSURE THE SWITCH HAS NOT COME LOOSE OR THE TERMINALS ARE TIGHT AND A WIRE IS NOT SHORTING AGAINST THE CASE. THE FAN AIR SENSOR(S) (AS1, AS2, AS3, AS4) ARE LOCATED IN THE COOLING CHAMBER ON THE SIDE OF THE FAN DRUM.

A3. REPAIR OR REPLACE BURNED OR BARE WIRING IN CONTACT WITH CHASSIS OR OTHER WIRING.

B1. IF VOLTAGE IS PRESENT ON TERMINAL #39 (120 VOLTS) THEN CHECK FOR VOLTAGE ON TERMINAL #53 (120 VOLTS) WHILE HOLDING THE FAN SWITCH (SW2) IN THE "ON" POSITION. IF NO VOLTAGE IS PRESENT THE FAN SWITCH (SW2) IS DEFECTIVE, REPLACE. THE BURNER SWITCH (SW3) MUST BE IN "OFF" POSITION.

B2. IF FAN #1 DOES NOT PULL-IN AND VOLTAGE IS PRESENT AT TERMINAL #53 (120 VOLTS), CHECK LOAD SIDE OF STARTER COIL FOR PRESENCE OF VOLTAGE WHEN FAN SWITCH (SW2) IS DEPRESSED. IF VOLTAGE IS PRESENT AT LOAD SIDE OF COIL ON STARTER (S1), THE HOLDING COIL IS DEFECTIVE AND MUST BE REPLACED. CHECK ALL COILS ON OTHER FAN STARTER(S) (S2, S3, S4) IN SEQUENCE TO FIND DEFECTIVE COIL AND REPLACE. NOTE: WHEN CHECKING COILS ON FAN STARTER(S) (S2, S3, S4) THE STARTER INTERLOCK(S) (SW15, SW16, SW17) ON THE PREVIOUS STARTER MUST PULLIN AND THE FAN TIMER(S) (K13, K14, K15) MUST TIME OUT TO SEE VOLTAGE PRESENT ON THE NEXT STARTER.

B3. IF FAN #1 PULLS-IN, CHECK LOAD SIDE OF INTERLOCK (SW14) FOR PRESENCE OF VOLTAGE WHEN FAN SWITCH (SW2) IS DEPRESSED. IF VOLTAGE IS PRESENT AT LOAD SIDE OF INTERLOCK (SW14) CHECK OPPOSITE SIDE OF INTERLOCK (SW14). IF NO POWER IS PRESENT THE INTERLOCK (SW14) IS DEFECTIVE, REPLACE. CHECK ALL INTERLOCKS ON OTHER FAN STARTER(S) (S2, S3, S4) IN SEQUENCE TO FIND DEFECTIVE INTERLOCK AND REPLACE. NOTE: TO CHECK INTERLOCK(S) (SW15, SW16, SW17) ON OTHER FAN STARTER(S) (S2, S3, S4) STARTERS MUST BE PULLED-IN.

B4. IF FAN # 1 PULLS-IN, CHECK LOAD SIDE OF FAN TIMER (K13) ON TERMINAL #2 (A1) LOCATED ON FAN TIMER PLUG-IN BASE. IF VOLTAGE IS PRESENT (120 VOLTS) THEN CHECK TERMINAL #3 LOCATED ON FAN TIMER (K13) PLUG-IN BASE, REMEMBER TO ALLOW THE TIMER TO TIME OUT BEFORE CHECKING VOLTAGE ON TERMINAL #3, IF VOLTAGE IS NOT PRESENT THE FAN TIMER (K13) IS DEFECTIVE, REPLACE. NOTE: TO CHECK OTHER TIMER(S) (K14, K15) FOLLOW THE SAME PROCEDURE.

C1. IF SOME OR NONE OF THE FAN PROVEN LIGHTS STAY LIT CHECK TO SEE IF THE FAN(S) ARE ROTATING IN THE CORRECT DIRECTION. WHEN ELECTRICAL SERVICE IS INSTALLED, ATTENTION MUST BE PAID TO PROPER PHASING. ALL MOTORS HAVE BEEN PHASED AT THE FACTORY. IN THE EVENT PHASES ARE REVERSED, SHUTOFF POWER ON MAIN BREAKER, REVERSE L1 AND L3 AT MAIN BREAKER. (WILD LEG MUST BE ON L2)

C2. IF VOLTAGE IS PRESENT ON TERMINAL #53 (120 VOLTS) THEN CHECK FOR VOLTAGE ON TERMINAL #54 (120 VOLTS) WHILE THE FAN(S) ARE LOCKED INTO OPERATION. IF NO VOLTAGE IS PRESENT THE FAN AIR SENSOR (AS1) IS DEFECTIVE, REPLACE. IF VOLTAGE IS PRESENT ON TERMINAL #54 THE FAN PROVEN LIGHT (DS30) IS DEFECTIVE, REPLACE.

C3. IF VOLTAGE IS PRESENT ON TERMINAL #54 (120 VOLTS) THEN CHECK FOR VOLTAGE ON TERMINAL #55 (120 VOLTS)

WHILE THE FAN(S) ARE LOCKED INTO OPERATION. IF NO VOLTAGE IS PRESENT THE FAN AIR SENSOR (AS2) IS DEFECTIVE, REPLACE. IF VOLTAGE IS PRESENT ON TERMINAL #55 THE FAN PROVEN LIGHT (DS31) IS DEFECTIVE, REPLACE.

C4. IF VOLTAGE IS PRESENT ON TERMINAL #55 (120 VOLTS) THEN CHECK FOR VOLTAGE ON TERMINAL #56 (120 VOLTS) WHILE THE FAN(S) ARE LOCKED INTO OPERATION. IF NO VOLTAGE IS PRESENT THE FAN AIR SENSOR (AS3) IS DEFECTIVE, REPLACE. IF VOLTAGE IS PRESENT ON TERMINAL #56 THE FAN PROVEN LIGHT (DS32) IS DEFECTIVE, REPLACE.

C5. IF VOLTAGE IS PRESENT ON TERMINAL #56 (120 VOLTS) THEN CHECK FOR VOLTAGE ON TERMINAL #57 (120 VOLTS) WHILE THE FAN(S) ARE LOCKED INTO OPERATION. IF NO VOLTAGE IS PRESENT THE FAN AIR SENSOR (AS4) IS DEFECTIVE, REPLACE. IF VOLTAGE IS PRESENT ON TERMINAL #57 THE FAN PROVEN LIGHT (DS33) IS DEFECTIVE, REPLACE.

D1. WITH FAN(S) RUNNING CHECK TO SEE IF VOLTAGE IS PRESENT ON TERMINAL #57 (120 VOLTS), THEN CHECK FOR VOLTAGE (120 VOLTS) ON TERMINAL #A1 (2) ON THE PURGE RELAY (K9), REMEMBER TO ALLOW THE FAN SENSOR RELAY (K7) TO TIME OUT (10 SEC) BEFORE CHECKING VOLTAGE ON TERMINAL #A1 (2) OF THE PURGE RELAY (K9), IF VOLTAGE IS NOT PRESENT THE FAN SENSOR RELAY (K7) IS DEFECTIVE, REPLACE. IF VOLTAGE (120 VOLTS) IS NOT PRESENT ON TERMINAL #36, AND PRESENT ON TERMINAL #A1 (2) OF THE PURGE RELAY (K9), PURGE RELAY IS DEFFECTIVE, REPLACE. IF VOLTAGE (120 VOLTS) IS PRESENT ON TERMINAL #36 BUT PURGING LIGHT (DS34) IS NOT LIT, PURGING LIGHT (DS34) IS DEFECTIVE, REPLACE.

E1. WITH FAN(S) RUNNING CHECK TO SEE IF VOLTAGE IS PRESENT ON TERMINAL #36 (120 VOLTS) BEFORE THE PURGE RELAY (K9) HAS TIMED OUT (60 SEC). THEN AFTER 60 SECONDS, CHECK FOR VOLTAGE ON TERMINAL #42 (120 VOLT). IF VOLTAGE IS NOT PRESENT, THE PURGE RELAY (K9) IS DEFECTIVE, REPLACE. IF VOLTAGE IS PRESENT, THE BURNER READY LIGHT (DS26) IS DEFECTIVE, REPLACE.

4. SEQUENCE: BURNER SWITCH (SW3) TO "ON", ENERGIZING BURNER CIRCUIT.

NOTE: REFER TO SCHEMATIC NUMBER: 900-009137 FOR BURNER CIRCUIT.

ACTION: FUEL SUPPLIED TO BURNERS. IGNITION FIRING LIGHT(S) (DS11, DS12, DS13, DS14) "ON" FOR 3-5 SECONDS, BURNER PROVEN LIGHT(S) (DS7, DS8, DS9, DS10) "ON".

SYMPTOMS: A. DRYER SHUTS DOWN IMMEDIATELY UPON ENGAGING BURNER SWITCH (SW3).
B. RESET FLAME CONTROL LIGHT (DS37) "ON".

C. SOME OR NONE OF THE IGNITION FIRING LIGHT(S) (DS11, DS12, DS13, DS14) LIGHT.

D. SOME OR NONE OF THE BURNER PROVEN LIGHT(S) (DS7, DS8, DS9, DS10) STAY LIT.

E. ALL BURNER PROVEN LIGHT(S) (DS7, DS8, DS9, DS10) COME "ON" MOMENTARILY THEN DRYER SHUTS DOWN.

POSSIBLE CAUSES:

A1. LOW GRAIN SITUATION (LOW GRAIN LIGHT(S) (DS16, DS17) "ON" INDICATING LOW GRAIN). NOTE: BURNERS WILL NOT FIRE WIHTOUT DRYER BEING FULL OF GRAIN.

A2. DEFECTIVE LOW GRAIN SWITCH(S) (SW9, SW10).

A3. FLAME SYSTEM BYPASS DELAY RELAY (K5) IS SET TOO LOW (15 SEC).

A4. VAPOR CUTOFF VALVE COIL (SOL1) OR LIQUID CUTOFF VALVE COIL (SOL2) SHORTED.

B. FLAME FAILURE, SAFTEY LOCKOUT ON FLAME CONTROL(S) (FC1, FC2, FC3, FC4).

C1. DEFECTIVE FLAME CONTROL (FC1).
DEFECTIVE IGNITION FIRING LIGHT (DS11).

C2. DEFECTIVE FLAME CONTROL (FC2).
DEFECTIVE IGNITION FIRING LIGHT (DS12).

C3. DEFECTIVE FLAME CONTROL (FC3).
DEFECTIVE IGNITION FIRING LIGHT (DS13).

C4. DEFECTIVE FLAME CONTROL (FC4).
DEFECTIVE IGNITION FIRING LIGHT (DS14).

D1. NO FUEL TO DRYER.

D2. PLUGGED FUEL LINE STRAINER.

D3. DEEFECTIVE VAPOR CUTOFF VALVE COIL (SOL1) OR LIQUID CUTOFF VALVE COIL (SOL2).

D4. DEFECTIVE PRESSURE REGULATOR.

D5. PLUGGED BURNER HOLES.

D6. DEFECTIVE IGNITION TRANSFORMER (XMFR 1), IGNITION PLUG, AND/OR IGNITION WIRE

D7. DEFECTIVE IGNITION TRANSFORMER (XMFR 2), IGNITION PLUG, AND/OR IGNITION WIRE

D8. DEFECTIVE IGNITION TRANSFORMER (XMFR 3), IGNITION PLUG, AND/OR IGNITION WIRE

D9. DEFECTIVE IGNITION TRANSFORMER (XMFR 4), IGNITION PLUG, AND/OR IGNITION WIRE

D10. DEFECTIVE BURNER PROVEN LIGHT (DS7), FLAME CONTROL (FC1), FLAME SENSOR, FLAME SENSOR WIRE, AND/OR BURNER GROUND WIRE.

D11. DEFECTIVE BURNER PROVEN LIGHT (DS8), FLAME CONTROL (FC2), FLAME SENSOR, FLAME SENSOR WIRE, AND/OR BURNER GROUND WIRE.

D12. DEFECTIVE BURNER PROVEN LIGHT (DS9), FLAME CONTROL (FC3), FLAME SENSOR, FLAME SENSOR WIRE, AND/OR BURNER GROUND WIRE.

D13. DEFECTIVE BURNER PROVEN LIGHT (DS10), FLAME CONTROL (FC4), FLAME SENSOR, FLAME SENSOR WIRE, AND/OR BURNER GROUND WIRE.

E1. DEFECTIVE FLAME RELAY (K1).

E2. DEFECTIVE FLAME RELAY (K2).
E3. DEFECTIVE FLAME RELAY (K3).
E4. DEFECTIVE BURNER RELAY (K6).

CORRECTIVE ACTION:

A1A. FILL DRYER FULL OF GRAIN.

A1B. TRASH AND PLUGGING PROBLEM - CHECK LOW GRAIN SWITCH(S) (SW9, SW10) FOR TRASH BUILDUP BEHIND PADDLE.

A2A. FRONT LOW GRAIN SWITCH (SW9). IF VOLTAGE (120 VOLTS) IS PRESENT ON TERMINAL #35 CHECK VOLTAGE ON TERMINAL #37 WITH SWITCH PADDLE ENGAGED. IF VOLTAGE IS NOT PRESENT THE LOW GRAIN SWITCH FRONT (SW9) IS DEFECTIVE, REPLACE.

A2B. REAR LOW GRAIN SWITCH (SW10). IF VOLTAGE (120 VOLTS) IS PRESENT ON TERMINAL #37 CHECK VOLTAGE ON TERMINAL #39 WITH SWITCH PADDLE ENGAGED. IF VOLTAGE IS NOT PRESENT THE LOW GRAIN SWITCH REAR (SW10) IS DEFECTIVE, REPLACE.

A3. SET FLAME SYSTEM BYPASS DELAY RELAY (K5) TO 15 SECONDS.

A4. INSPECT COILS (SOL1, SOL2) FOR BAD CONNECTIONS INSIDE COIL CASES OR DISCONNECT EACH COIL SEPARATELY AND CONNECT TO AN OUTSIDE 120 VOLT SOURCE AND LISTEN FOR THE VALVE TO PULL IN, IF NOT PULLING IN THE COIL IS DEFECTIVE, REPLACE. NOTE: TEST SHOULD BE PERFORMED WITH ALL POWER "OFF" TO DRYER.

B. MANUAL RESET IS REQUIRED, PUSH RESET BUTTON (BLACK) ON FLAME CONTROL(S) (FC1, FC2, FC3, FC4). FLAME CONTROLS ARE LOCATED ON INSIDE OF LARGE PANEL BOX DOOR. NOTE: WHEN RESETING FIREYE MODEL M-SERIES II, BURNER SWITCH MUST BE “ON”.

C1A. IF VOLTAGE IS NOT PRESENT ON TERMINAL #1 (120 VOLTS), WITH BURNER SWITCH (SW3) "ON" THE BURNER SWITCH (SW3) IS DEFECTIVE, REPLACE.

C1B. IF VOLTAGE IS PRESENT ON TERMINAL #1 (120 VOLTS) WITH BURNER SWITCH (SW3) "ON" THEN CHECK FOR VOLTAGE ON TERMINAL #4 (THERE WILL BE A 4 TO 5 SECOND DELAY BEFORE VOLTAGE WILL BE PRESENT ON TERMINAL #4). IF VOLTAGE IS NOT PRESENT ON TERMINAL #4 THE FLAME CONTROL (FC1) IS DEFECTIVE, REPLACE. IF VOLTAGE IS PRESENT THE IGNITION FIRING LIGHT (DS11) IS DEFECTIVE, REPLACE.

C2. IF VOLTAGE IS PRESENT ON TERMINAL #1 (120 VOLTS) WITH BURNER SWITCH (SW3) "ON" THEN CHECK FOR VOLTAGE ON TERMINAL #5 (THERE WILL BE A 4 TO 5 SECOND DELAY BEFORE VOLTAGE WILL BE PRESENT ON TERMINAL #5). IF VOLTAGE IS NOT PRESENT ON TERMINAL #5 THE FLAME CONTROL (FC2) IS DEFECTIVE, REPLACE. IF VOLTAGE IS PRESENT THE IGNITION FIRING LIGHT (DS12) IS DEFECTIVE, REPLACE.

C3. IF VOLTAGE IS PRESENT ON TERMINAL #1 (120 VOLTS) WITH BURNER SWITCH (SW3) "ON" THEN CHECK FOR VOLTAGE ON TERMINAL #6 (THERE WILL BE A 4 TO 5 SECOND DELAY BEFORE VOLTAGE WILL BE PRESENT ON TERMINAL #6). IF VOLTAGE IS NOT PRESENT ON TERMINAL #6 THE FLAME CONTROL (FC3) IS DEFECTIVE, REPLACE. IF VOLTAGE IS PRESENT THE IGNITION FIRING LIGHT (DS13) IS DEFECTIVE, REPLACE.

C4. IF VOLTAGE IS PRESENT ON TERMINAL #1 (120 VOLTS) WITH BURNER SWITCH (SW3) "ON" THEN CHECK FOR VOLTAGE ON TERMINAL #7 (THERE WILL BE A 4 TO 5 SECOND DELAY BEFORE VOLTAGE WILL BE PRESENT ON TERMINAL #7). IF VOLTAGE IS NOT PRESENT ON TERMINAL #7 THE FLAME CONTROL (FC4) IS DEFECTIVE, REPLACE. IF VOLTAGE IS PRESENT THE IGNITION FIRING LIGHT (DS14) IS DEFECTIVE, REPLACE.

D1. CHECK FUEL SUPPLY TO DRYER, CHECK GAS PRESSURE, AND MANUAL VALVES "OPEN" ON DRYER. NOTE: ON L.P. UNITS ARE MANUAL VALVES OPEN AT TANK?

D2. REMOVE STRAINER AND CLEAN. (L.P. UNITS ONLY)

D3. INSPECT COILS (SOL1, SOL2) FOR BAD CONNECTIONS INSIDE COIL CASES OR DISCONNECT EACH COIL SEPARATELY AND CONNECT TO AN OUTSIDE 120 VOLT SOURCE AND LISTEN FOR THE VALVE TO PULL IN, IF NOT PULLING IN THE COIL IS DEFECTIVE, REPLACE.

TEST SHOULD BE PERFORMED WITH POWER "OFF" TO DRYER.

D4. ADJUST REGULATOR FOR 12 POUNDS OF GAS PRESSURE ON L.P. UNITS AND 10 POUNDS ON NATURAL GAS UNITS. IF NO PRESSURE IS PRESENT CALL YOUR LOCAL SUPPLIER.

D5A. INSPECT BURNER(S) FOR PLUGGED HOLES AND CLEAN. (BURNER HOLES ARE 5/64" DIAMETER). IF BURNER HOLES ARE OPEN IT MAY BE NECESSARY TO REMOVE AND VACCUM INSIDE OF BURNER USING A SHOPVAC CONNECTED TO FUEL INLET HOLE.

D5B. WATER IN BURNER(S) - IT'S POSSIBLE OVER THE OFF SEASON THAT WATER HAS GOTTEN INTO THE BURNER RING. REMOVE PIPE PLUG LOCATED ON FUEL TRAIN OUTSIDE BURNER DRUM.

D6A. TO D9A. INSPECT IGNITION PLUG FOR CARBON BUILDUP ON ELECTRODES, CHECK GAP 1/8" TO 3/16", AND INSPECT IGNITION WIRE FOR TIGHT CONNECTIONS AND CONDITION OF WIRE. IF DEFECTIVE, REPLACE AS REQUIRED.

D6B. TO D9B. REMOVE TRANSFORMER, IGNITION WIRE AND IGNITION PLUG FROM DRYER. CONNECT 120 VOLTS TO IGNITION TRANSFORMER WITH IGNITION PLUG AND WIRE CONNECTED. IF NO SPARK ON IGNITION PLUG, TRANSFORMER IS DEFECTIVE, REPLACE.

D10. IF VOLTAGE IS PRESENT ON TERMINAL #12 (120 VOLTS), BURNER PROVEN LIGHT (DS7) IS DEFECTIVE, REPLACE. IF VOLTAGE IS NOT PRESENT ON TERMINAL #12, REFER TO FIREYE BULLETIN LOCATED IN SECTION 14, COMPONENT LITERATURE. CHECK FOR FLAME SIGNAL PER BULLETIN INSTRUCTIONS. IF FLAME SIGNAL IS NOT PRESENT, INSPECT FLAME SENSOR FOR CRACKED PORCELAIN, BROKEN ROD, LOOSE FLAME ROD, AND INSPECT FLAME SENSOR WIRE FOR TIGHT CONNECTIONS AND CONDITION OF WIRE. ALSO INSPECT GREEN BURNER GROUND WIRE FOR TIGHT CONNECTIONS AND CONDITION OF WIRE. REPLACE AS REQUIRED. IF FLAME SIGNAL IS PRESENT, FLAME CONTROL (FC1) IS DEFECTIVE, REPLACE.

D11. IF VOLTAGE IS PRESENT ON TERMINAL #13 (120 VOLTS), BURNER PROVEN LIGHT (DS8) IS DEFECTIVE, REPLACE. IF VOLTAGE IS NOT PRESENT ON TERMINAL #13, REFER TO FIREYE BULLETIN LOCATED IN SECTION 14, COMPONENT LITERATURE. CHECK FOR FLAME SIGNAL PER BULLETIN INSTRUCTIONS. IF FLAME SIGNAL IS NOT PRESENT, INSPECT FLAME SENSOR FOR CRACKED PORCELAIN, BROKEN ROD, LOOSE FLAME ROD, AND INSPECT FLAME SENSOR WIRE FOR TIGHT CONNECTIONS AND CONDITION OF WIRE. ALSO INSPECT GREEN BURNER GROUND WIRE FOR TIGHT CONNECTIONS AND CONDITION OF WIRE. REPLACE AS REQUIRED. IF FLAME SIGNAL IS PRESENT, FLAME CONTROL (FC2) IS DEFECTIVE, REPLACE.

D12. IF VOLTAGE IS PRESENT ON TERMINAL #14 (120 VOLTS), BURNER PROVEN LIGHT (DS9) IS DEFECTIVE, REPLACE. IF VOLTAGE IS NOT PRESENT ON TERMINAL #14, REFER TO FIREYE BULLETIN LOCATED IN SECTION 14, COMPONENT LITERATURE. CHECK FOR FLAME SIGNAL PER BULLETIN INSTRUCTIONS. IF FLAME SIGNAL IS NOT PRESENT, INSPECT FLAME SENSOR FOR CRACKED PORCELAIN, BROKEN ROD, LOOSE FLAME ROD, AND INSPECT FLAME SENSOR WIRE FOR TIGHT CONNECTIONS AND CONDITION OF WIRE. ALSO INSPECT GREEN BURNER GROUND WIRE FOR TIGHT CONNECTIONS AND CONDITION OF WIRE. REPLACE AS REQUIRED. IF FLAME SIGNAL IS PRESENT, FLAME CONTROL (FC3) IS DEFECTIVE, REPLACE.

D13. IF VOLTAGE IS PRESENT ON TERMINAL #15 (120 VOLTS), BURNER PROVEN LIGHT (DS10) IS DEFECTIVE, REPLACE. IF VOLTAGE IS NOT PRESENT ON TERMINAL #15, REFER TO FIREYE BULLETIN LOCATED IN SECTION 14, COMPONENT LITERATURE. CHECK FOR FLAME SIGNAL PER BULLETIN INSTRUCTIONS. IF FLAME SIGNAL IS NOT PRESENT, INSPECT FLAME SENSOR FOR CRACKED PORCELAIN, BROKEN ROD, LOOSE FLAME ROD, AND INSPECT FLAME SENSOR WIRE FOR TIGHT CONNECTIONS AND CONDITION OF WIRE. ALSO INSPECT GREEN BURNER GROUND WIRE FOR TIGHT CONNECTIONS AND CONDITION OF WIRE. REPLACE AS REQUIRED. IF FLAME SIGNAL IS PRESENT, FLAME CONTROL (FC4) IS DEFECTIVE, REPLACE.

E1. WITH FLAME SYSTEM "ON", BURNER PROVEN LIGHTS (DS7, DS8) "ON", CHECK TERMINAL #14 (3) (120 VOLTS) LOCATED ON THE FLAME RELAY (K1) PLUG-IN BASE. IF NO VOLTAGE IS PRESENT THE FLAME RELAY (K1) IS DEFECTIVE, REPLACE.

E2. WITH FLAME SYSTEM "ON", BURNER PROVEN LIGHTS (DS8, DS9) "ON", CHECK TERMINAL #14 (3) (120 VOLTS) LOCATED ON THE FLAME RELAY (K2) PLUG-IN BASE. IF NO VOLTAGE IS PRESENT THE FLAME RELAY (K2) IS DEFECTIVE, REPLACE.

E3. WITH FLAME SYSTEM "ON", BURNER PROVEN LIGHTS (DS9, DS10) "ON", CHECK TERMINAL #14 (3) (120 VOLTS) LOCATED ON THE FLAME RELAY (K3) PLUG-IN BASE. IF NO VOLTAGE IS PRESENT THE FLAME RELAY (K3) IS DEFECTIVE, REPLACE.

E4. WITH FLAME SYSTEM "ON", BURNER PROVEN LIGHT(S) (DS7, DS8, DS9, DS10) "ON". VISUALLY INSPECT THE CONTACTS IN THE FLAME RELAY (K6) TO SEE IF THEY ARE CLOSING. IF NOT, THE FLAME RELAY (K6) IS DEFECTIVE, REPLACE.

NOTE: DELUX PROVIDES THREE (3) TYPES OF LOADING SYSTEMS.

A. LEVELING AUGER SYSTEM. (STANDARD)
B. GRAVITY FLOW WITHOUT HIGH AND LOW BIN SWITCHES. (OPTIONAL)
C. GRAVITY FLOW WITH HIGH AND LOW BIN SWITCHES. (OPTIONAL)

5A. SEQUENCE: LOAD SWITCH (SW4) TO "ON", ENERGIZING LOAD CIRCUIT. LEVELING AUGER SYSTEM (STANDARD)

ACTION: LOAD SWITCH (SW4) "ON", GRAIN LOADING LIGHT (DS12) "ON" STARTS LEVELING AUGER ON DRYER AND WET AUXILIARY LOADING. LOADS DRYER AUTOMATICALLY AS REQUIRED. GRAIN LOADING LIGHT (DS12) "ON" UNTIL HIGH / LOW GRAIN MONITOR SHUTS LOAD AUGER "OFF". LOW GRAIN LIGHT(S) (DS16, DS17) "ON" UNTIL GRAIN ENGAGES PADDLE(S) ON LOW GRAIN SWITCH(S) (SW9, SW10).

SYMPTOMS:

A. NO GRAIN LOADING LIGHT (DS12).
B. GRAIN LOADING LIGHT (DS12) "ON" BUT LOADING SYSTEM NOT RUNNING.
C. DRYER SHUTS DOWN IMMEDIATELY OR DURING LOADING OPERATION.
D. LOW GRAIN LIGHT(S) (DS16, DS17) STAY LIT.
E. LEVELING AUGER AND AUXILIARY LOADING RUN CONTINUALLY.
F. DRYER OVERLOADS (TOO FULL).

POSSIBLE CAUSES:

A1. DEFECTIVE LOAD SWITCH (SW4).
A2. DEFECTIVE MERCURY SWITCH (LOW) IN HIGH / LOW GRAIN MONITOR.
A3. DEFECTIVE GRAIN LOADING LIGHT (DS12).

B1. DEFECTIVE LOAD AUGER AND/OR AUXILIARY LOAD MOTOR OVERLOAD MODULE.
B2. DEFECTIVE LOAD AUGER STARTER COIL (S5).
B3. DEFECTIVE LOAD AUGER STARTER INTERLOCK (SW19).
B4. DEFECTIVE AUXILIARY LOAD STARTER COIL (S6).

C. OVERLOAD(S) ON LOAD AUGER AND/OR AUXILIARY LOAD STARTER(S) (S5, S6) TRIPPED.

D1. GRAIN HAS NOT ENGAGED PADDLES PROPERLY ON LOW GRAIN SWITCH(S) (SW9, SW10).
D2. DEFECTIVE LOW GRAIN SWITCH(S) (SW9, SW10).

E. IMPROPER GRAIN LOADING RATE.

F. IMPROPER ADJUSTMENT OF HIGH / LOW GRAIN MONITOR.

CORRECTIVE ACTION:

A1. IF VOLTAGE IS PRESENT ON TERMINAL #39 (120 VOLTS), TURN LOAD SWITCH (SW4) TO "ON" THEN CHECK FOR VOLTAGE ON TERMINAL #46. IF VOLTAGE IS NOT PRESENT THE LOAD SWITCH (SW4) IS DEFECTIVE, REPLACE.

A2. IF VOLTAGE IS PRESENT ON TERMINAL #46 (120 VOLTS), THEN CHECK FOR VOLTAGE ON TERMINAL #47. NOTE: MAKE SURE HIGH / LOW GRAIN MONITOR PADDLE IS HANGING IN THE DOWN POSITION. IF VOLTAGE IS NOT PRESENT THE MERCURY SWITCH (LOW) IS DEFECTIVE, REPLACE.

A3. IF VOLTAGE IS PRESENT ON TERMINAL #47 (120 VOLTS), THE GRAIN LOADING LIGHT (DS5) IS DEFECTIVE, REPLACE.

B1. CHECK OVERLOAD MODULES, AND REPLACE.

B2. IF LOAD AUGER STARTER (S5) DOES NOT PULL-IN AND VOLTAGE IS PRESENT AT LOAD SIDE OF COIL, THE HOLDING COIL IS DEFECTIVE, REPLACE.

B3. IF LOAD AUGER STARTER (S5) DOES PULL-IN, CHECK LOAD SIDE OF INTERLOCK (SW19) ON LOAD AUGER STARTER (S5) FOR PRESENCE OF VOLTAGE (120 VOLTS). IF VOLTAGE IS PRESENT AT LOAD SIDE OF INTERLOCK (SW19), CHECK OPPOSITE SIDE OF INTERLOCK (SW19). IF NO POWER IS PRESENT, THE INTERLOCK (SW19) IS DEFECTIVE, REPLACE.

B4. IF AUXILIARY LOAD STARTER (S6) DOES NOT PULL-IN AND VOLTAGE IS PRESENT AT LOAD SIDE OF COIL, THE HOLDING COIL IS DEFECTIVE, REPLACE.

C. OVERLOADS ON LOAD AUGER AND/OR AUXILIARY LOAD STARTERS (S5, S6) MAY HAVE TRIPPED FROM A MOTOR DRAWING HIGH AMPERAGE. DETERMINE WHICH ONE IS OPEN. RESET DEFECTIVE OVERLOAD. IT WILL BE NECESSARY TO DETERMINE IF A SHORT CIRCUIT OR EXCESSIVE OVERLOAD CONDITION EXISTS IN THIS ISOLATED SYSTEM AND WHAT CORRECTIVE STEPS NEED TO BE TAKEN TO RESOLVE THIS CONDITION. OTHER POSSIBLE CAUSES COULD BE (1) BAD MOTOR, REPLACE. (2) JAMMED AUXILIARY LOAD SYSTEM, CORRECT. (3) LOOSE WIRING CONNECTIONS ON TERMINALS, TIGHTEN. (4) DEFECTIVE OVERLOAD, REPLACE. (5) IMPROPER ADJUSTMENT OF HIGH / LOW GRAIN MONITOR, ADJUST MERCURY SWITCHES (LOW AND/OR HIGH) IN HIGH / LOW GRAIN MONITOR BOX. ADJUST LOW MERCURY SWITCH SO THAT THE LOAD SYSTEM WILL TURN "ON" JUST BEFORE THE GRAIN PADDLE SWINGS TO A STRAIGHT DOWN POSITION. ADJUST HIGH MERCURY SWITCH SO THAT THE LOAD SYSTEM WILL TURN "OFF" WHEN THE GRAIN PUSHES THE PADDLE FORWARD TO 45° ANGLE.

D1. TRASH AND PLUGGING PROBLEM - CHECK LOW GRAIN SWITCH(S) (SW9, SW10) FOR TRASH BUILDUP BEHIND PADDLE.

D2A. FRONT LOW GRAIN SWITCH (SW9). IF VOLTAGE (120 VOLTS) IS PRESENT ON TERMINAL #35 CHECK VOLTAGE ON TERMINAL #37 WITH SWITCH PADDLE ENGAGED. IF VOLTAGE IS NOT PRESENT THE LOW GRAIN SWITCH FRONT (SW9) IS DEFECTIVE, REPLACE.

D2B. REAR LOW GRAIN SWITCH (SW10). IF VOLTAGE (120 VOLTS) IS PRESENT ON TERMINAL #37 CHECK VOLTAGE ON TERMINAL #39 WITH SWITCH PADDLE ENGAGED. IF VOLTAGE IS NOT PRESENT THE LOW GRAIN SWITCH REAR (SW10) IS DEFECTIVE, REPLACE.

E. CHECK FOR EMPTY WET GRAIN SUPPLY. CHECK AUXILIARY LOAD SYSTEM FOR PLUGGING, BROKEN BELT, IMPROPER FLOW RATE, UNDERSIZED LOAD SYSTEM, ETC. THAT MAY RESTRICT GRAIN FLOW TO DRYER.

F. ADJUST MERCURY SWITCHES (LOW AND/OR HIGH) IN HIGH / LOW GRAIN MONITOR BOX. ADJUST LOW MERCURY SWITCH SO THAT THE LOAD SYSTEM WILL TURN "ON" JUST BEFORE THE GRAIN PADDLE SWINGS TO A STRAIGHT DOWN POSITION.

ADJUST HIGH MERCURY SWITCH SO THAT THE LOAD SYSTEM WILL TURN "OFF" WHEN THE GRAIN PUSHES THE PADDLE FORWARD TO 45° ANGLE.

5B. SEQUENCE: LOAD SWITCH (SW4) TO "ON", ENERGIZING LOAD CIRCUIT. GRAVITY FLOW <u>WITHOUT</u> HIGH AND LOW BIN SWITCHS. (OPTIONAL)

ACTION: LOAD SWITCH (SW4) "ON", GRAIN LOADING LIGHT (DS12) "ON" STARTS WET AUXILIARY LOADING. LOW GRAIN LIGHT(S) (DS17, DS16) "ON" UNTIL GRAIN ENGAGES PADDLE(S) ON LOW GRAIN SWITCH(S) (SW9, SW10)

SYMPTOMS:
A. NO GRAIN LOADING LIGHT (DS12).
B. GRAIN LOADING LIGHT (DS12) "ON" BUT LOADING SYSTEM NOT RUNNING.
C. DRYER SHUTS DOWN IMMEDIATELY OR DURING LOADING OPERATION.
D. LOW GRAIN LIGHT(S) (DS17, DS16) STAY LIT.

POSSIBLE CAUSES:
A1. DEFECTIVE LOAD SWITCH (SW4).
A2. DEFECTIVE GRAIN LOADING LIGHT (DS12).

B1. DEFECTIVE AUXILIARY LOAD MOTOR OVERLOAD MODULE.
B2. DEFECTIVE AUXILIARY LOAD STARTER COIL (S6).

C. OVERLOAD ON AUXILIARY LOAD STARTER (S6) TRIPPED.

D1. GRAIN HAS NOT ENGAGED PADDLES PROPERLY ON LOW GRAIN SWITCH(S) (SW9, SW10).
D2. DEFECTIVE LOW GRAIN SWITCH(S) (SW9, SW10).
D3. IMPROPER GRAIN LOADING RATE.

CORRECTIVE ACTION:
A1. IF VOLTAGE IS PRESENT ON TERMINAL #39 (120 VOLTS), TURN LOAD SWITCH (SW4) TO "ON" THEN CHECK FOR VOLTAGE ON TERMINAL #46. IF VOLTAGE IS NOT PRESENT THE LOAD SWITCH (SW4) IS DEFECTIVE, REPLACE.

A2. IF VOLTAGE IS PRESENT ON TERMINAL #47 (120 VOLTS), THE GRAIN LOADING LIGHT (DS5) IS DEFECTIVE, REPLACE.

B1. CHECK OVERLOAD MODULES, AND REPLACE.

B2. IF AUXILIARY LOAD STARTER (S6) DOES NOT PULL-IN AND VOLTAGE IS PRESENT AT LOAD SIDE OF COIL, THE HOLDING COIL IS DEFECTIVE, REPLACE.

C. OVERLOAD ON AUXILIARY LOAD STARTER (S6) MAY HAVE TRIPPED FROM A MOTOR DRAWING HIGH AMPERAGE. RESET DEFECTIVE OVERLOAD. IT WILL BE NECESSARY TO DETERMINE IF A SHORT CIRCUIT OR EXCESSIVE OVERLOAD CONDITION EXISTS IN THIS ISOLATED SYSTEM AND WHAT CORRECTIVE STEPS NEED TO BE TAKEN TO RESOLVE THIS CONDITION. OTHER POSSIBLE CAUSES COULD BE (1) BAD

MOTOR, REPLACE. (2) JAMMED AUXILIARY LOAD SYSTEM, CORRECT. (3) LOOSE WIRING CONNECTIONS ON TERMINALS, TIGHTEN. (4) DEFECTIVE OVERLOAD, REPLACE.

D1. TRASH AND PLUGGING PROBLEM - CHECK LOW GRAIN SWITCH(S) (SW9, SW10) FOR TRASH BUILDUP BEHIND PADDLE.

D2A. FRONT LOW GRAIN SWITCH (SW9). IF VOLTAGE (120 VOLTS) IS PRESENT ON TERMINAL #35 CHECK VOLTAGE ON TERMINAL #37 WITH SWITCH PADDLE ENGAGED. IF VOLTAGE IS NOT PRESENT THE LOW GRAIN SWITCH FRONT (SW9) IS DEFECTIVE, REPLACE.

D2B. REAR LOW GRAIN SWITCH (SW10). IF VOLTAGE (120 VOLTS) IS PRESENT ON TERMINAL #37 CHECK VOLTAGE ON TERMINAL #39 WITH SWITCH PADDLE ENGAGED. IF VOLTAGE IS NOT PRESENT THE LOW GRAIN SWITCH REAR (SW10) IS DEFECTIVE, REPLACE.

D3. CHECK FOR EMPTY WET GRAIN SUPPLY. CHECK AUXILIARY LOAD SYSTEM FOR PLUGGING, BROKEN BELT, IMPROPER FLOW RATE, UNDERSIZED LOAD SYSTEM, ETC. THAT MAY RESTRICT GRAIN FLOW TO DRYER.

5C. SEQUENCE: LOAD SWITCH (SW4) TO "ON", ENERGIZING LOAD CIRCUIT. GRAVITY FLOW <u>WITH</u> HIGH AND LOW BIN SWITCHES. (OPTIONAL)

ACTION: LOAD SWITCH (SW4) "ON", GRAIN LOADING LIGHT (DS12) "ON" STARTS WET AUXILIARY LOADING. LOADS DRYER AUTOMATICALLY AS REQUIRED. GRAIN LOADING LIGHT (DS12) "ON" UNTIL GRAIN LEVEL CONTROL SWITCH(S) (HIGH) SHUTS AUXILIARY LOAD SYSTEM "OFF" . LOW GRAIN LIGHT(S) (DS17, DS16) "ON" UNTIL GRAIN ENGAGES PADDLE(S) ON LOW GRAIN SWITCH(S) (SW9, SW10). NOTE: OPERATION OF GRAIN LEVEL CONTROL LIGHTS (1) LOW LIGHT (DS25) "OFF" UNTIL GRAIN ENGAGES PADDLE. (2) HIGH LIGHT(S) (DS23, DS24) "OFF" UNTIL GRAIN ENGAGES PADDLES SHUTTING "OFF" LOAD SYSTEM.

SYMPTOMS:
A. NO GRAIN LOADING LIGHT (DS12).
B. GRAIN LOADING LIGHT (DS12) "ON" BUT LOADING SYSTEM NOT RUNNING.
C. DRYER SHUTS DOWN IMMEDIATELY OR DURING LOADING OPERATION.
D. LOW GRAIN LIGHT(S) (DS17, DS16) STAY LIT.
E. NO (LOW) GRAIN LOADING LIGHT (DS25).
F. NO (HIGH) GRAIN LOADING LIGHT(S) (DS23, DS24).
G. AUXILIARY LOADING RUNNING CONTINUALLY.

POSSIBLE CAUSES:
A1. DEFECTIVE LOAD SWITCH (SW4).
A2. DEFECTIVE (LOW) GRAIN LEVEL CONTROL SWITCH (SW13).
A3. DEFECTIVE GRAIN LOADING LIGHT (DS5).

B1. DEFECTIVE AUXILIARY LOAD MOTOR OVERLOAD MODULE.
B2. DEFECTIVE AUXILIARY LOAD STARTER(S) COIL.

C1. DEFECTIVE LOAD AUGER STARTER INTERLOCK.
C2. OVERLOAD(S) ON AUXILIARY LOAD STARTER(S) TRIPPED.

D1. GRAIN HAS NOT ENGAGED PADDLES PROPERLY ON LOW GRAIN SWITCH(S) (SW9, SW10).
D2. DEFECTIVE LOW GRAIN SWITCH(S) (SW9, SW10).
D3. IMPROPER GRAIN LOADING RATE.

E1. GRAIN HAS NOT ENGAGED PADDLE PROPERLY ON (LOW) GRAIN LEVEL CONTROL SWITCH (SW13).
E2. DEFECTIVE (LOW) GRAIN LEVEL CONTROL SWITCH (SW13). DEFECTIVE (LOW) GRAIN LEVEL CONTROL LIGHT (DS25).
E3. IMPROPER GRAIN LOADING RATE.

F1. GRAIN HAS NOT ENGAGED PADDLES PROPERLY ON (HIGH) GRAIN LEVEL CONTROL SWITCH(S) (SW11, SW12).
F2. DEFECTIVE (HIGH) GRAIN LEVEL CONTROL SWITCH(S) (SW11, SW12). DEFECTIVE (HIGH) GRAIN LEVEL CONTROL LIGHT(S) (DS23, DS24).
F3. IMPROPER GRAIN LOADING RATE.

G. IMPROPER GRAIN LOADING RATE.

CORRECTIVE ACTION:

A1. IF VOLTAGE IS PRESENT ON TERMINAL #39 (120 VOLTS), TURN LOAD SWITCH (SW4) TO "ON" THEN CHECK FOR VOLTAGE ON TERMINAL #46. IF VOLTAGE IS NOT PRESENT THE LOAD SWITCH (SW4) IS DEFECTIVE, REPLACE.

A2. IF VOLTAGE IS PRESENT ON TERMINAL #46 (120 VOLTS), THEN CHECK FOR VOLTAGE ON TERMINAL #47, WITH SWITCH PADDLE ENGAGED. IF VOLTAGE IS NOT PRESENT THE (LOW) GRAIN LEVEL CONTROL SWITCH (SW13) IS DEFECTIVE, REPLACE.

A3. IF VOLTAGE IS PRESENT ON TERMINAL #47 (120 VOLTS), THE GRAIN LOADING LIGHT (DS12) IS DEFECTIVE, REPLACE.

B1. CHECK OVERLOAD MODULES, AND REPLACE.

B2. IF AUXILIARY LOAD STARTER(S) DOES NOT PULL-IN AND VOLTAGE IS PRESENT AT LOAD SIDE OF COIL, THE HOLDING COIL IS DEFECTIVE, REPLACE.

C1. IF AUXILIARY LOAD STARTER(S) DOES PULL-IN, CHECK LOAD SIDE OF INTERLOCK ON AUXILIARY LOAD STARTER FOR PRESENCE OF VOLTAGE (120 VOLTS). IF VOLTAGE IS PRESENT AT LOAD SIDE OF INTERLOCK, CHECK OPPOSITE SIDE OF INTERLOCK. IF NO VOLTAGE IS PRESENT, THE INTERLOCK IS DEFECTIVE, REPLACE.

C2. OVERLOADS ON AUXILIARY LOAD STARTER(S) MAY HAVE TRIPPED FROM A MOTOR DRAWING HIGH AMPERAGE. DETERMINE WHICH ONE IS OPEN. RESET DEFECTIVE OVERLOAD. IT WILL BE NECESSARY TO DETERMINE IF A SHORT CIRCUIT OR EXCESSIVE OVERLOAD CONDITION EXISTS IN THIS ISOLATED SYSTEM AND WHAT CORRECTIVE

STEPS NEED TO BE TAKEN TO RESOLVE THIS CONDITION. OTHER POSSIBLE CAUSES COULD BE (1) BAD MOTOR, REPLACE. (2) JAMMED AUXILIARY LOAD SYSTEM, CORRECT. (3) LOOSE WIRING CONNECTIONS ON TERMINALS, TIGHTEN. (4) DEFECTIVE OVERLOAD, REPLACE.

D1. TRASH AND PLUGGING PROBLEM - CHECK LOW GRAIN SWITCH(S) (SW9, SW10) FOR TRASH BUILDUP BEHIND PADDLE.

D2A. FRONT LOW GRAIN SWITCH (SW9). IF VOLTAGE (120 VOLTS) IS PRESENT ON TERMINAL #35 CHECK VOLTAGE ON TERMINAL #37 WITH SWITCH PADDLE ENGAGED. IF VOLTAGE IS NOT PRESENT THE LOW GRAIN SWITCH FRONT (SW9) IS DEFECTIVE, REPLACE.

D2B. REAR LOW GRAIN SWITCH (SW10). IF VOLTAGE (120 VOLTS) IS PRESENT ON TERMINAL #37 CHECK VOLTAGE ON TERMINAL #39 WITH SWITCH PADDLE ENGAGED. IF VOLTAGE IS NOT PRESENT THE LOW GRAIN SWITCH REAR (SW10) IS DEFECTIVE, REPLACE.

D3. CHECK FOR EMPTY WET GRAIN SUPPLY. CHECK AUXILIARY LOAD SYSTEM FOR PLUGGING, BROKEN BELT, IMPROPER FLOW RATE, UNDERSIZED LOAD SYSTEM, ETC. THAT MAY RESTRICT GRAIN FLOW TO DRYER.

E1. TRASH AND PLUGGING PROBLEM - CHECK (LOW) GRAIN LEVEL CONTROL SWITCH (SW13) FOR TRASH BUILDUP BEHIND PADDLE.

E2. IF VOLTAGE (120 VOLTS) IS PRESENT ON TERMINAL #46, CHECK VOLTAGE ON TERMINAL #52 WITH SWITCH PADDLE ENGAGED. IF VOLTAGE IS NOT PRESENT THE (LOW) GRAIN LEVEL CONTROL SWITCH (SW13) IS DEFECTIVE, REPLACE. IF VOLTAGE IS PRESENT, (LOW) GRAIN LEVEL CONTROL LIGHT (DS25) IS DEFECTIVE, REPLACE.

E3. CHECK FOR EMPTY WET GRAIN SUPPLY. CHECK AUXILIARY LOAD SYSTEM FOR PLUGGING, BROKEN BELT, IMPROPER FLOW RATE, UNDERSIZED LOAD SYSTEM, ETC. THAT MAY RESTRICT GRAIN FLOW TO DRYER.

F1. TRASH AND PLUGGING PROBLEM - CHECK (HIGH) GRAIN LEVEL CONTROL SWITCH(S) (SW11, SW12) FOR TRASH BUILDUP BEHIND PADDLE.

F2A. (HIGH - FRONT) GRAIN LEVEL CONTROL SWITCH. IF VOLTAGE (120 VOLTS) IS PRESENT ON TERMINAL #46, CHECK VOLTAGE ON TERMINAL #50 WITH SWITCH PADDLE ENGAGED. IF VOLTAGE IS NOT PRESENT THE (HIGH - FRONT) GRAIN LEVEL CONTROL SWITCH (SW11) IS DEFECTIVE, REPLACE. IF VOLTAGE IS PRESENT, (HIGH - FRONT) GRAIN LEVEL CONTROL LIGHT (DS23) IS DEFECTIVE, REPLACE.

F2B. (HIGH - REAR) GRAIN LEVEL CONTROL SWITCH. IF VOLTAGE (120 VOLTS) IS PRESENT ON TERMINAL #46,

CHECK VOLTAGE ON TERMINAL #51 WITH SWITCH PADDLE ENGAGED. IF VOLTAGE IS NOT PRESENT THE (HIGH - REAR) GRAIN LEVEL CONTROL SWITCH (SW12) IS DEFECTIVE, REPLACE. IF VOLTAGE IS PRESENT, (HIGH - REAR) GRAIN LEVEL CONTROL LIGHT (DS24) IS DEFECTIVE, REPLACE.

F3. CHECK FOR EMPTY WET GRAIN SUPPLY. CHECK AUXILIARY LOAD SYSTEM FOR PLUGGING, BROKEN BELT, IMPROPER FLOW RATE, UNDERSIZED LOAD SYSTEM, ETC. THAT MAY RESTRICT GRAIN FLOW TO DRYER.

G. CHECK FOR EMPTY WET GRAIN SUPPLY. CHECK AUXILIARY LOAD SYSTEM FOR PLUGGING, BROKEN BELT, IMPROPER FLOW RATE, UNDERSIZED LOAD SYSTEM, ETC. THAT MAY RESTRICT GRAIN FLOW TO DRYER.

6. SEQUENCE: UNLOAD SWITCH (SW5) TO "ON", ENERGIZING UNLOAD CIRCUIT.

ACTION: UNLOAD SWITCH (SW5) "ON", GRAIN UNLOADING LIGHT (DS36) "ON", STARTS UNLOAD AUGER AND DRY AUXILIARY UNLOADING. UNLOADS DRY GRAIN FROM THE DRYER AT A PRE-SELECTED RATE.

SYMPTOMS:
A. NO GRAIN UNLOADING LIGHT (DS36).
B. GRAIN UNLOADING LIGHT (DS36) "ON" BUT UNLOADING SYSTEM NOT RUNNING.
C. DRYER SHUTS DOWN IMMEDIATELY OR DURING UNLOADING OPERATION.

POSSIBLE CAUSES:
A. DEFECTIVE GRAIN UNLOADING SWITCH (SW5).
DEFECTIVE GRAIN UNLOADING LIGHT (DS36).

B1. DEFECTIVE UNLOAD AUGER AND/OR AUXILIARY UNLOAD OVERLOAD MODULE.
B2. DEFECTIVE AUXILIARY UNLOAD STARTER COIL (S8).

B3. DEFECTIVE AUXILIARY UNLOAD STARTER INTERLOCK (SW20).
B4. DEFECTIVE UNLOAD AUGER STARTER COIL (S7).

C1. OVERLOAD(S) ON UNLOAD AUGER AND/OR AUXILIARY UNLOAD STARTER(S) (S7, S8) TRIPPED.
C2. OPEN DISCHARGE OVERFLOW SWITCH (OPTIONAL ON SOME MODELS).

CORRECTIVE ACTION:
A. IF VOLTAGE IS PRESENT ON TERMINAL #39 (120 VOLTS), TURN UNLOAD SWITCH (SW5) TO "ON". THEN CHECK FOR VOLTAGE ON TERMINAL #49. IF VOLTAGE IS NOT PRESENT THE UNLOAD SWITCH (SW5) IS DEFECTIVE, REPLACE. IF VOLTAGE IS PRESENT, THE GRAIN UNLOADING LIGHT (DS36) IS DEFECTIVE, REPLACE.

B1. CHECK OVERLOAD MODULES, AND REPLACE AS REQUIRED.

B2. IF AUXILIARY UNLOAD STARTER (S8) DOES NOT PULL-IN AND VOLTAGE IS PRESENT AT LOAD SIDE OF COIL, THE HOLDING COIL IS DEFECTIVE, REPLACE.

B3. IF AUXILIARY UNLOAD STARTER (S8) DOES PULL-IN, CHECK LOAD SIDE OF INTERLOCK (SW20) ON AUXILIARY UNLOAD STARTER (S8) FOR PRESENCE OF VOLTAGE (120 VOLTS). IF VOLTAGE IS PRESENT AT LOAD SIDE OF INTERLOCK (SW20), CHECK OPPOSITE SIDE OF INTERLOCK (SW20). IF NO VOLTAGE IS PRESENT, THE INTERLOCK (SW20) IS DEFECTIVE, REPLACE.

B4. IF UNLOAD AUGER STARTER (S7) DOES NOT PULL-IN AND VOLTAGE IS PRESENT AT LOAD SIDE OF COIL, THE HOLDING COIL IS DEFECTIVE, REPLACE.

C1. OVERLOADS ON UNLOAD AUGER AND/OR AUXILIARY UNLOAD STARTER(S) (S7, S8) MAY HAVE TRIPPED FROM A MOTOR DRAWING HIGH AMPERAGE. DETERMINE WHICH ONE IS OPEN. RESET DEFECTIVE OVERLOAD. IT WILL BE NECESSARY TO DETERMINE IF A SHORT CIRCUIT OR EXCESSIVE OVERLOAD CONDITION EXISTS IN THIS ISOLATED SYSTEM AND WHAT CORRECTIVE STEPS NEED TO BE TAKEN TO RESOLVE THIS CONDITION. OTHER POSSIBLE CAUSES COULD BE (1) BAD MOTOR, REPLACE. (2) JAMMED UNLOAD SYSTEM, CORRECT. (3) LOOSE WIRING CONNECTIONS ON TERMINALS, TIGHTEN. (4) DEFECTIVE OVERLOAD, REPLACE.

C2. CHECK FOR OVERFLOW CONDITION, CORRECT.

7A. SEQUENCE: METERING SELECTOR SWITCH (SW6) TO "MAN", ENERGIZING METERING SYSTEM CIRCUIT.

ACTION: METERING SELECTOR SWITCH (SW6) TO "MAN" POSITION, STARTS METERING ROLLS AND DISCHARGES AT VARIABLE RATE CONTROLLED BY SETTING OF MANUAL METERING CONTROL (RV1). NOTE: METERING ROLL MONITOR SWITCH (SW7) MUST BE IN "OFF" POSITION UNTIL METERING SELECTOR SWITCH (SW6) IS IN EITHER "MAN" OR "AUTO" POSITION.

NOTE: UNLOAD AUGER AND AUXILIARY UNLOAD SYSTEM MUST BE "ON" BEFORE METERING SYSTEM IS ENERGIZED.

SYMPTOMS:
A. METERING ROLLS DO NOT START.
B. DRYER SHUTS DOWN IMMEDIATELY OR DURING UNLOADING OPERATION.
C. RATE OF DISCHARGE CANNOT BE CONTROLLED.

POSSIBLE CAUSE:
A1. DEFECTIVE UNLOAD STARTER INTERLOCK (SW21).
A2. DEFECTIVE FUSE(S) – DC MOTOR DRIVE (SCR1).
A3. DEFECTIVE METERING ROLL SELECTOR SWITCH (SW6).
A4. DEFECTIVE DC MOTOR DRIVE (SCR1).
A5. DEFECTIVE DC MOTOR AND/OR BRUSHES.
A6. DEFECTIVE MANUAL SPEED CONTROL (RV1).

B1. SHORT CIRCUIT IN DC MOTOR AND/OR BRUSHES.
B2. SHORT CIRCUIT IN DC MOTOR DRIVE (SCR1).
B3. FEEDROLL MONITOR SYSTEM "OPEN" DUE TO: DEFECTIVE FEEDROLL MONITOR SWITCH (SW8) OR CAM NUT, TIMER RELAY(S) (K10, K11), OR METERING ROLLS STOPPING BECAUSE OF JAMMED METERING ROLLS OR BROKEN CHAIN.

C1. DEFECTIVE MANUAL SPEED CONTROL (RV1).
C2. DEFECTIVE DC MOTOR DRIVE (SCR1).
C3. DC MOTOR DRIVE (SCR1) OUT OF CALIBRATION.

CORRECTIVE ACTION:

A1. IF UNLOAD AUGER STARTER (S7) DOES PULL-IN, CHECK LOAD SIDE OF INTERLOCK (SW21) ON UNLOAD AUGER STARTER (S7) FOR PRESENCE OF VOLTAGE (120 VOLTS). IF VOLTAGE IS PRESENT AT LOAD SIDE OF INTERLOCK (SW21), CHECK OPPOSITE SIDE OF INTERLOCK (SW21). IF NO VOLTAGE IS PRESENT, THE INTERLOCK (SW21) IS DEFECTIVE, REPLACE.

A2. CHECK FUSE(S) LOCATED ON DC DRIVE (SCR1) IF DEFECTIVE, REPLACE.

A3. IF VOLTAGE IS PRESENT ON TERMINAL #64 (120 VOLTS) WITH METERING ROLL SELECTOR SWITCH (SW6) "ON" THEN CHECK FOR VOLTAGE ON TERMINAL #75. IF VOLTAGE IS NOT PRESENT THE METERING ROLL SELECTOR SWITCH (SW6) IS DEFECTIVE, REPLACE.

A4. IF VOLTAGE IS PRESENT ON TERMINAL #75 (120 VOLTS) WITH METERING ROLL SELECTOR SWITCH (SW6) "ON" THEN CHECK FOR VOLTAGE (0 TO 90 VOLTS DC) ON TERMINALS #73 (+) & #74 (-), IF VOLTAGE IS NOT PRESENT THE SCR CONTROL IS DEFECTIVE, REPLACE. NOTE: IF THE MOTOR IS DEFECTIVE THE DC DRIVE (SCR1) WILL SHOW NO VOLTAGE ON TERMINALS #73 & #74, THERE MUST BE A LOAD ON TERMINALS #73 & #74 TO COMPLETE THE TEST. A DEFECTIVE MOTOR OR BRUSHES CAN RESULT IN DAMAGE TO THE DC DRIVE (SCR1).

A5. DISCONNECT MOTOR WIRES AND CHECK FOR CONTINUITY. IF NO CONTINUITY, CHECK BRUSHES TO INSURE BOTH BRUSHES ARE MAKING CONTACT WITH THE ROTOR. IF THEY ARE NOT, CLEAN OR REPLACE. IF BOTH BRUSHES ARE MAKING CONTACT THE MOTOR IS DEFECTIVE, REPAIR OR REPLACE. NOTE: A DEFECTIVE MOTOR OR BRUSHES CAN RESULT IN DAMAGE TO THE DC DRIVE (SCR1).

A6. DISCONNECT WIRES FROM THE MANUAL METERING CONTROL (RV1) AND CHECK RESISTANCE OF CONTROL (0 TO 5K OHMS), TURNING CONTROL KNOB 270 DEGREES. IF FULL SPAN DOES NOT OCCUR OR SPIKES OCCUR REPLACE MANUAL METERING CONTROL (RV1).

B1. DISCONNECT MOTOR WIRES AND CHECK FOR CONTINUITY. IF CONTINUITY IS PRESENT CHECK EACH WIRE TO GROUND FOR A SHORT CIRCUIT. IF A SHORT CIRCUIT IS PRESENT REPAIR OR REPLACE MOTOR.

B2. WITH POWER "OFF" AND D.C. MOTOR WIRE DISCONNECTED CHECK TERMINAL #75 TO GROUND FOR A SHORT CIRCUIT, IF A SHORT CIRCUIT IS PRESENT THE DC DRIVE (SCR1) NEEDS TO BE REPAIRED OR REPLACED.

B3A. IF VOLTAGE IS PRESENT ON TERMINAL #31 (120 VOLTS) THEN CHECK FOR VOLTAGE ON TERMINAL #32 (120 VOLTS) WHILE HOLDING THE POWER SWITCH (SW1) IN THE "ON" POSITION. IF NO VOLTAGE IS PRESENT THE FEEDROLL MONITOR CIRCUIT IS OPEN. FIRST, CHECK TO SEE IF THE SELECTOR SWITCH (SW7) IS IN THE "OFF" POSITION. IF SELECTOR SWITCH (SW7) IS IN THE "ON" POSTION, RETURN TO "OFF" POSITION.

B3B. IF DRYER SHUTS DOWN WITHIN 50 TO 60 SECONDS WHEN FEEDROLL MONITOR SELECTOR SWITCH (SW7) IS "ON" AND METERING SYSTEM IS OPERATING, CHECK VOLTAGE (120 VOLTS) ON TERMINALS #62 AND #63. VOLTAGE SHOULD BE PRESENT ON EACH TERMINAL ABOUT EVERY 2 TO 4 SECONDS WHILE THE FEEDROLLS ARE TURNING. IF VOLTAGE IS NOT PRESENT ON BOTH TERMINALS CHECK FEEDROLL MONITOR SWITCH (SW8) FOR CORRECT OPERATION AND CAM NUT ADJUSTMENT LOCATED ON FEEDROLL SPROCKET. ADJUST CAM NUT OR REPLACE FEEDROLL MONITOR SWITCH (SW8). IF VOLTAGE IS PRESENT, CHECK THE TIME DELAY RELAYS (K10 & K11) FOR PROPER OPERATION AND SETTING (60 SEC.). SET TO 60 SECONDS OR REPLACE IF DEFECTIVE.

B3C. CHECK FOR JAMMED METERING ROLL(S), CORRECT, OR CHECK BROKEN CHAIN, REPAIR OR REPLACE.

C1. DISCONNECT WIRES FROM THE MANUAL METERING CONTROL (RV1) AND CHECK RESISTANCE OF CONTROL (0 TO 5K OHMS), TURNING CONTROL KNOB 270 DEGREES. IF FULL SPAN DOES NOT OCCUR OR SPIKES OCCUR, REPLACE MANUAL METERING CONTROL (RV1).

C2. IF VOLTAGE IS PRESENT ON TERMINAL #75 (120 VOLTS) WITH METERING SELECTOR SWITCH (SW6) "ON" THEN CHECK FOR VOLTAGE (0 TO 90 VOLTS DC) ON TERMINALS #73 (+) & #74 (-), IF VOLTAGE IS NOT PRESENT THE SCR CONTROL IS DEFECTIVE, REPLACE. NOTE: IF THE MOTOR IS DEFECTIVE THE DC DRIVE (SCR1) WILL SHOW NO VOLTAGE ON TERMINALS #73 & #74, THERE MUST BE A LOAD ON TERMINALS #73 & #74 TO COMPLETE THE TEST. A DEFECTIVE MOTOR OR BRUSHES CAN RESULT IN DAMAGE TO THE DC DRIVE (SCR1).

C3. STEP 1: REMOVE THE COVER OF THE DC DRIVE (SCR1) AND LOCATE THE "MIN", "MAX" AND "IR COMP" POTS ON THE CIRCUIT BOARD.

STEP 2: SET THE METERING SELECTOR SWITCH (SW6) TO THE "MAN" POSITION.

STEP 3: IR COMPENSATION ADJUSTMENT:
(a.) IR COMPENSATION IS PROVIDED TO OVERCOME

THE MOTOR'S NATURAL TENDENCY TO SLOW DOWN AS LOAD INCREASES. IF THE MOTOR SLOWS DOWN EXCESSIVELY AS IT IS LOADED, THE POT MARKED "IR COMP" SHOULD BE ADJUSTED CLOCKWISE.

(b.) IF THE IR COMP IS ADJUSTED TOO FAR CLOCKWISE, THE MOTOR WILL BEGIN TO OSCILLATE IN SPEED OR "HUNT". IF THIS PULSING OF SPEED OCCURS, ADJUST THE IR COMP COUNTERCLOCKWISE UNTIL THE MOTOR SPEED STABILIZES.

STEP 4: MINIMUM SPEED ADJUSTMENT:

(a.) ADJUST THE MANUAL SPEED CONTROL (RV1) FULLY COUNTERCLOCKWISE.

(b.) ADJUST THE "MIN" SPEED POT ON DC DRIVE (SCR1) WITH A SCREWDRIVER UNTIL YOU READ 8 VDC ON THE DC VOLTMETER (M1).

STEP 5: MAXIMUM SPEED ADJUSTMENT:

(a.) ADJUST THE MANUAL SPEED CONTROL (RV1) FULLY CLOCKWISE.

(b.) ADJUST THE "MAX" SPEED POT ON THE DC DRIVE (SCR1) WITH A SCREWDRIVER UNTIL YOU READ 85 VDC ON THE DC VOLTMETER (M1). NOTE: DO NOT EXCEED 90 VDC IN MANUAL OR AUTOMATIC MODE. THIS WILL CAUSE DAMAGE TO THE DC MOTOR.

STEP 6: MAKE SURE YOUR TAKE AWAY SYSTEM CAN HANDLE 90 VDC OUTPUT OF GRAIN. IF NOT, YOU CAN ADJUST THE "MAX" SPEED POT ON THE DC DRIVE (SCR1) DOWN TO MEET YOUR SYSTEM CAPACITY. (EX. 75 VDC).

STEP 7: RECHECK THE UNLOADING RATE BY STARTING AT STEP 4 AND VERIFY THAT THE MINIMUM AND MAXIMUM VOLTAGES HAVE BEEN PROPERLY SET.

STEP 8: PLACE COVER ON THE DC DRIVE (SCR1).

NOTE: FOR MORE INFORMATION ON THE DC DRIVE (SCR1), REFER TO SECTION 14 "COMPONENT LITERATURE".

7B. SEQUENCE: METERING SELECTOR SWITCH (SW6) TO "AUTO", ENERGIZING AUTOMATIC METERING SYSTEM CIRCUIT.

NOTE: BEFORE TROUBLE SHOOTING AUTOMATIC METERING SYSTEM, MANUAL METERING SYSTEM MUST BE OPERATIONAL. IF NOT, REFER TO SEQUENCE "7A".

ACTION: METERING SELECTOR SWITCH (SW6) TO "AUTO" POSITION, STARTS METERING ROLLS AND DISCHARGES AT VARIABLE RATE CONTROLLED BY SETTING OF AUTOMATIC METERING CONTROL (TC2). THE AUTOMATIC SYSTEM SENSES GRAIN TEMPERATURE IN THE GRAIN COLUMN AND ADJUSTS THE DISCHARGE RATE AS NECESSARY TO AID IN MAINTAINING A CONSISTENT GRAIN MOISTURE LEVEL. NOTE: FEEDROLL MONITOR SWITCH (SW7) MUST BE IN "OFF" POSITION UNTIL METERING SELECTOR SWITCH (SW6) IS IN EITHER "MAN" OR "AUTO" POSITION.

NOTE: UNLOAD AUGER AND AUXILIARY UNLOAD SYSTEM MUST BE "ON" BEFORE METERING SYSTEM IS ENERGIZED.

SYMPTOMS:
A. RATE OF DISCHARGE CANNOT BE ADJUSTED.
B. NOT MAINTAINING A CONSISTENT GRAIN MOISTURE LEVEL.

POSSIBLE CAUSES:
A1. DEFECTIVE METERING SELECTOR SWITCH (SW6).
A2. DEFECTIVE AUTOMATIC MOISTURE RELAY (K12).
A3. DEFECTIVE MOISTURE SENSOR OR SENSOR WIRING.
A4. DEFECTIVE AUTOMATIC METERING CONTROL (TC2).

B1. IMPROPER SETTING OF MOISTURE CONTROL SYSTEM.
B2. INCORRECT CONFIGURATION OF AUTOMATIC METERING CONTROL (TC2).

CORRECTIVE ACTION:
A1. IF VOLTAGE IS PRESENT ON TERMINAL #64 (120 VOLTS) WITH METERING SELECTOR SWITCH (SW6) "ON" - "AUTO" POSITION, THEN CHECK FOR VOLTAGE ON TERMINAL #76. IF VOLTAGE IS NOT PRESENT THE METERING SELECTOR SWITCH (SW6) IS DEFECTIVE, REPLACE.

A2. IF VOLTAGE IS PRESENT ON TERMINAL #76 (120 VOLTS) WITH METERING SELECTOR SWITCH (SW6) "ON" - "AUTO" POSITION, CHECK AUTOMATIC MOISTURE RELAY (K12) TO ENSURE CONTACTS ARE CLOSING. IF NOT, RELAY IS DEFECTIVE, REPLACE.

A3. REFER TO ERROR MESSAGES CHART ON PAGE 9-29.

A4. CHECK AUTOMATIC METERING CONTROL AS FOLLOWS:

STEP 1: CHECK SUPPLY VOLTAGE (120 VOLTS) WITH A VOLT METER BETWEEN TERMINALS 98 AND 99 TERMINALS ON THE CONTROL. IF THE SUPPLY VOLTAGE IS NOT PRESENT, CHECK THE POWER SOURCE FOR PROBLEMS.

STEP 2: CHECK THE 0-10 VDC OUTPUT BY MEASURING WITH A VOM BETWEEN THE F1(+) AND G1(-) TERMINALS. IF 0-10 VDC IS NOT PRESENT OR IS OUT OF TOLERANCE, CONSIDER THE CONTROL TO BE DEFECTIVE AND REPLACE.

B1A. FINAL GRAIN MOISTURE LEVEL WAS NOT STABILIZED IN MANUAL MODE BEFORE SWITCHING TO AUTOMATIC MODE. RETURN TO MANUAL MODE AND STABILIZE MOISTURE LEVEL.

NOTE: A COMPLETE CYCLE OF GRAIN FLOW THROUGH THE DRYER MUST OCCUR BEFORE SEEING AN ACCURATE GRAIN MOISTURE LEVEL. THIS TIME IS DETERMINED BY THE MOISTURE CONTENT OF THE GRAIN ENTERING THE DRYER AND THE DESIRED DISCHARGE MOISTURE LEVEL. THIS TIME CAN VARY FROM APPROXIMATELY ONE (1) HOUR TO TWO (2) HOURS. CHANGING THE MANUAL MODE BEFORE STABILIZING WILL GIVE IMPROPER

GRAIN MOISTURE LEVEL OUTPUTS IN THE AUTOMATIC MODE.
(TIME + PATIENCE = DESIRED FINAL MOISTURE LEVEL).

B1B. WHEN ONLY ONE (1) TO TWO (2) POINTS OF MOISTURE ARE BEING REMOVED FROM THE GRAIN BEING DRIED, THE MANUAL MODE IS RECOMMENDED.

B2A. AUTOMATIC METERING CONTROL CONFIGURATION SETTINGS: PAGES 9-29 THROUGH 9-31 PROVIDE THE INFORMATION NEEDED TO CHECK OR CHANGE THE CONFIGURATION SETTINGS.
SETUP IS NORMALLY DONE AT THE FACTORY AND SHOULD ONLY BE DONE BY A QUALIFIED TECHNICIAN OR UNDER INSTRUCTION FROM THE FACTORY.

B2B. THE PROPORTIONAL BAND (PB) SETTING ON THE CONTROLLER AFFECTS HOW FAST THE CONTROL REACTS TO CHANGES IN THE GRAIN MOISTURE. THE PB SHOULD ALREADY BE SET TO THE DESIRED VALUE FOR YOUR DRYER (SEE *NOTE ON PAGE 9-30). THE PB CAN BE SET BY PRESSING THE 'ADVANCE' KEY UNTIL "Pb1" APPEARS IN THE LOWER DISPLAY, THEN PRESS 'UP' OR 'DOWN' KEY TO ACHIEVE DESIRED SET POINT WHICH IS SHOWN IN THE UPPER DISPLAY. IF IT SEEMS THAT THE SYSTEM IS NOT RESPONDING ENOUGH TO CHANGES IN MOISTURE CONTENT OF YOUR INCOMING GRAIN, CHANGE THE PB VALUE TO A LOWER NUMBER. IF THE SYSTEM SEEMS TO REACT TOO MUCH AND HUNTS BACK AND FORTH, CHANGE THE PB VALUE TO A HIGHER NUMBER. PRESS THE 'INFINITY' KEY AND TEMPERATURE AND SET POINT WILL RETURN TO THE DISPLAY.

***NOTE**: IT IS THE MOISTURE OF YOUR DISCHARGE GRAIN OVER A PERIOD OF TIME THAT IS IMPORTANT. DO NOT MAKE CHANGES TOO SOON BECAUSE THE SYSTEM APPEARS TO BE CHANGING SPEEDS TOO QUICKLY. SOMETIMES IT TAKES A LOT OF REACTION TO MAINTAIN THE DESIRED RESULTS.*

8. DRYER VIBRATION CAUSE AND PREVENTON.

SYMPTOMS:
- A. FAN(S) VIBRATING. (SEE FAN VIBRATION:, PAGE 9-33).
- B. DISCHARGE AUGER AND/OR LEVELING AUGER VIBRATING.
- C. DRYER NOT LEVEL.

POSSIBLE CAUSES:
- A1. DIRT IN FAN HUB.
- A2. LOOSE FAN HUB.
- A3. LOOSE FAN BLADE(S).
- A4. BLADE(S) DAMAGED.
- A5. LOOSE OR BROKEN MOTOR MOUNTS.
- A6. DEFECTIVE FAN MOTOR BEARING(S).

- B1. AUGER(S) OUT OF BALANCE.
- B2. DEFECTIVE AUGER BEARING(S).
- B3. BENT AUGER SHAFT(S).
- B4. LOOSE OR BROKEN BEARING HANGER(S).

- C1. NOT LEVELED WHEN INSTALLED.
- C2. INADEQUATE DRYER SUPPORT.

CORRECTIVE ACTION:
- A1. REMOVE COVER PLATE IN CENTER OF BURNER DRUM AND CLEAN TOP OF FAN HUB.
- A2. REMOVE COVER PLATE IN CENTER OF BURNER DRUM AND TIGHTEN AND ALIGN HUB BOLTS.
- A3. RESET BLADE PITCH TO PROPER SETTING AND TIGHTEN.
- A4. REPLACE FAN BLADES AND HAVE FAN REBALANCED.
- A5. REPAIR AND CHECK FAN FOR VIBRATION CAUSE AND CORRECT.
- A6. REPLACE MOTOR BEARING(S) OR REPLACE MOTOR.
- B1. INSPECT FOR PROBLEM, REPAIR OR REPLACE.
  - (1) BENT AUGER TUBE
  - (2) FLIGHTING NOT WEARING EVEN.
- B2. REPLACE BEARING(S).
- B3. REPLACE SHAFT(S).
- B4. REPLACE HANGER(S).
- C1. LEVEL DRYER PROPERLY.
- C2. SUPPORT DRYER PER FOUNDATION PRINT.

FAN VIBRATION: CAUSE AND PREVENTION

EXTREME DAMAGE CAN OCCUR FROM FAN VIBRATION. THE MAJOR CAUSE OF VIBRATION IS RELATED TO DUST ACCUMULATION AND IMPROPER MAINTENANCE OF THE FAN ASSEMBLY AND FAN MOTOR.

DURING THE DRYING PROCESS, A CONSIDERABLE AMOUNT OF DUST IS DISPERSED INTO THE AIR. THIS AIR IS CHANNELED ACROSS THE MOTOR AND FAN INTO THE PLENUM CHAMBER. THE DUST CAN COLLECT ON THE MOTOR AND ON THE INSIDE OF THE FAN HUB OR THE CENTER PORTION OF THE FAN. THE AMOUNT OF DUST VARIES FROM THE TYPE AND QUALITY OF PRODUCT BEING DRIED. WHEN A DRYER IS SHUT DOWN, DUST MAY FALL OFF THE FAN HUB UNEVENLY. UPON RESTARTING, THIS ACCUMULATION OF DUST WILL ACT AS EXTRA WEIGHT ON THE FAN, CAUSING THE FAN TO BE OUT OF BALANCE. PREVENTIVE MAINTENANCE PROCEDURES **TO ELIMINATE VIBRATION** CAUSES ARE AS FOLLOWS: **INSPECT THE FAN HUB FOR DIRT, CHECK THE FAN BLADES FOR CHIPS, CRACKS AND PROPER SETTING, MAKE SURE ALL BOLTS ON THE BUSHING ARE TIGHT. CHECK THE FAN MOTOR MAKING SURE MOTOR MOUNT BOLTS ARE SECURE, MOTOR BEARINGS RUNNING COOL AND NOT NOISY**. MAJOR MOTOR MANUFACTURERS RECOMMEND THAT MOTORS BE ROTATED A MINIMUM OF FIVE REVOLUTIONS EVERY THIRTY DAYS TO PROVIDE PROPER LUBRICATION OF BEARINGS AND PREVENT MOISTURE CONTAMINATION IN THE MOTOR HOUSING. INSPECT MOTOR AND FAN ASSEMBLY ENSURING FREE TURNING OF FAN BLADES AND TO ENSURE PROPER CLEARANCE BETWEEN BLADES AND FAN DRUM.

FAN AND/OR MOTOR VIBRATION OVER A LONG PERIOD OF TIME WILL EVENTUALLY CAUSE PROBLEMS. CHECK YOUR DRYER!

SHUTDOWN PROCEDURE

1. MOVE METERING ROLL DRYING SELECTOR SWITCH TO "OFF" POSITION.

2. MOVE UNLOAD SWITCH TO "OFF" POSITION.

3. MOVE LOAD SWITCH TO "OFF" POSITION.

4. MOVE BURNER SWITCH TO "OFF" POSITION.

   NOTE: MOVING BURNER SWITCH TO "OFF" POSITION WILL SHUTDOWN ENTIRE DRYER. RESTART OF FANS WILL BE NECESSARY TO COOL GRAIN.

   SPECIAL NOTE: MOVING THE POWER SWITCH TO "ON" POSITION MOMENTARILY WHILE MOVING THE BURNER SWITCH TO THE "OFF" POSITION WILL ALLOW FANS TO CONTINUE TO RUN.

5. AFTER DRYER HAS COOLED APPROXIMATELY 30 MINUTES AND PLENUM THERMOMETER READS AMBIENT TEMPERATURE CONDITIONS, SWITCH FAN SWITCH TO "OFF".

6. MOVE POWER SWITCH TO "OFF" POSITION.

7. TURN "OFF" MANUAL FUEL SUPPLY TO DRYER.

8. RETURN ALL SWITCHES TO "OFF" POSITION.

EMERGENCY SHUTDOWN

1. **MOVE POWER SWITCH TO "OFF"**, LOCATED ON LOWER PANEL IN THE ELECTRICAL CONTROL BOX OF THE DRYER. ALL SYSTEMS, ELECTRICAL AND FUEL WILL SHUTDOWN.

2. **TURN "OFF" MANUAL FUEL SUPPLY** TO DRYER.

3. **TURN "OFF" MAIN DISCONNECT** TO DRYER.

4. **RETURN ALL SWITCHES TO "OFF"** POSITION.

** FUEL BURN OUT - TURN "OFF" FUEL SUPPLY AT TANK OR DRYER WITH BURNER SWITCH IN "ON" POSITION. AS SOON AS PRESSURE GAUGE ON DRYER DROPS TO ZERO, IMMEDIATELY SWITCH BURNER SWITCH TO "OFF" TO AVOID BURNER SAFTEY LOCKOUT.

DRAWINGS

DP AND DPSL SERIES DRYERS

STARTING WITH 2010 MODELS

PART NUMBER	DRAWINGS	
900-006320	FOUNDATION LAYOUT DP AND DPSL SERIES	
**********	ANCHORS INSTRUCTION SHEET (RAWLPLUG 5/8")	
900-006326	LEG EXTENSION DESIGN (SIDE AND CORNER)	
900-009194	GARNER (ROOF)	
900-009193	GARNER WIRING ILLUSTRATION	
900-009130	SCHEMATIC –	(2010- UP)
900-009137	SCHEMATIC – FLAME CONTROL	(2010- UP)
900-009188	WIRING DIAGRAM FIREYE BASE –	(2010- UP)
900-009215	PLUMBING SCHEMATIC – NON-CSA	LIQUID PROPANE
900-009216	PLUMBING SCHEMATIC – NON-CSA	NATURAL GAS
900-009217	PLUMBING SCHEMATIC – CSA	LIQUID PROPANE
900-009218	PLUMBING SCHEMATIC – CSA	NATURAL GAS
900-008640	ILLUSTRATION SIDE WALKWAYS (PIPE AND FITTING LOCATIONS)	

ALL SHIPPING LISTS BELOW LOCATED IN SECTION 13

SLGW-DP-REV 1	SHIPPING LIST - GARNER WALKWAY
SLW-10X-REV 1	SHIPPING LIST – SIDE WALKWAY (10FT) MODELS
SLW-15X-REV 1	SHIPPING LIST - SIDE WALKWAY (15FT) MODELS
SLW-20X-REV 1	SHIPPING LIST – SIDE WALKWAY (20FT) MODELS
SLW-25X-REV 1	SHIPPING LIST – SIDE WALKWAY (25FT) MODELS
SLW-30X-REV 1	SHIPPING LIST – SIDE WALKWAY (30FT) MODELS
SLW-40X-REV 1	SHIPPING LIST – SIDE WALKWAY (40FT) MODELS

NOTE: DRAWING ILLUSTRATION FOR SIDE WALKWAYS 900-008640 (LOCATED IN SECTION 11)

SLGRW45	SHIPPING LIST – TOP ROOF WALKWAY 45 SLOPE (10FT) MODELS
SLGRW45	SHIPPING LIST – TOP ROOF WALKWAY 45 SLOPE (15FT) MODELS
SLGRW45	SHIPPING LIST – TOP ROOF WALKWAY 45 SLOPE (20FT) MODELS
SLGRW45	SHIPPING LIST – TOP ROOF WALKWAY 45 SLOPE (25FT) MODELS
SLGRW45	SHIPPING LIST – TOP ROOF WALKWAY 45 SLOPE (30FT) MODELS
SLGRW45	SHIPPING LIST – TOP ROOF WALKWAY 45 SLOPE (40FT) MODELS
900-005123	RECLAIM /W WEATHERSHIELD - OPTIONAL
900-005404	RECLAIM - OPTIONAL

NOTES:
1. "HANGAR" INDICATES CONTROL PANEL END OF DRYER.
2. OPTIONAL SLAB EXTENSION IS FOR CONCRETE WORK AREA AT CONTROL PANEL END. A MINIMUM LENGTH OF 5 FEET SHOULD BE USED.

REGISTERED PROFESSIONAL ENGINEER
STATE OF NEBRASKA
E-5213

ECN	DATE	CHANGE	AUTH

DELUX MFG. CO.
AIR BASE ROAD
KEARNEY, NEBRASKA

FOUNDATION PLAN
MSP-DP-DPSL SERIES

HELLER & ASSOCIATES CONSULTING ENGINEERS P.C.

MODEL NO.	FOOTING LENGTH (L)	CONCRETE C.Y.	REINF. STEEL
DP 3015	12'	8.0	26-#5x 9'-6"
DPSL 3520			14-#4x 11'-6"
MSF 31010			26-#4x 5'-0" BENT
MSF 41515			
DP 4025	17'	11.3	36-#5x 9'-6"
DPSL 4530			16-#4x 16'-6"
MSF 62520			36-#4x 5'-0" BENT
MSF 72525			
DP 6030	22'	14.7	46-#5x 9'-6"
DPSL 7040			16-#4x 21'-6"
			46-#4x 5'-0" BENT
DP 7550	27'	18.0	56-#5x 9'-6"
DPSL 8560			16-#4x 26'-6"
			56-#4x 5'-0" BENT
DP 9045	32'	21.3	66-#5x 9'-6"
DPSL 10560			16-#4x 31'-6"
			66-#4x 5'-0" BENT
DP 12060	42'	28.0	86-#5x 9'-6"
DPSL 14080			16-#4x 41'-6"
			86-#4x 5'-0" BENT

NOTES:
QUANTITY CONCRETE SHOWN IN THIS TABLE IS BASED ON THE NEAT FOOTING DIMENSIONS AND IS PROVIDED FOR INFORMATION ONLY. ACTUAL QUANTITY REQUIRED MAY VARY BASED ON EXCAVATION DIMENSIONS, OPTIONAL SLAB EXTENSION AND YIELD OF CONCRETE SUPPLIED.

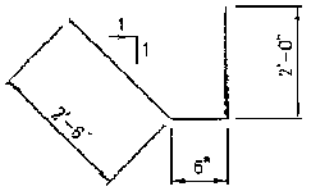

BENDING DIAGRAM
FOR #4 REBAR

ECN	DATE	CHANGE	AUTH
	9/30/98	ADDED MODEL No.s DPSL & MSF	SW

GENERAL NOTES

1. THIS FOOTING IS DESIGNED IN ACCORDANCE WITH THE 1994 UNIFORM BUILDING CODE. BASIC WIND SPEED IS 80 MPH, EXPOSURE C.
2. FOOTINGS ARE DESIGNED FOR THE SPECIFIC MODEL NUMBER LISTED WITH A 4 FOOT MAXIMUM LEG EXTENSION.
3. ANCHORS SHALL BE 5/8" DOUBLE CONE ANCHORS AS MANUFACTURED BY RAWLPLUG CO. INC. OR EQUAL. HOLES FOR ANCHORS WILL BE DRILLED AFTER DRYER IS SET. PROVIDE 2"x 2"x 1/4" PLATE WASHERS FOR EACH ANCHOR.
4. DRYER MUST BE LEVEL ALONG LENGTH AND WIDTH AT ALL TIMES DURING DRYING PROCESS.
5. CONCRETE SHALL HAVE A MINIMUM 28 DAY STRENGTH OF 3000 PSI.
6. REINFORCING STEEL SHALL BE ASTM A615 GRADE 60.
7. MINIMUM SOIL BEARING CAPACITY SHALL BE 1000 PSF.

REGISTERED PROFESSIONAL ENGINEER
Stanley V. Johnson
E-5213
STATE OF NEBRASKA

MILLER & ASSOCIATES CONSULTING ENGINEERS, P.C.

SCALE:
PROJECT NO.
DATE:
DRAWN BY:
APPROVED BY:
DRAWING NO.

FOUNDATION PLAN
MSF-DP-DPSL SERIES

DELUX MFG. CO.
AIR BASE ROAD
KEARNEY, NEBRASKA

DELUX

SCALE DRAWING NO. 900-006320
SHEET 2 OF 1

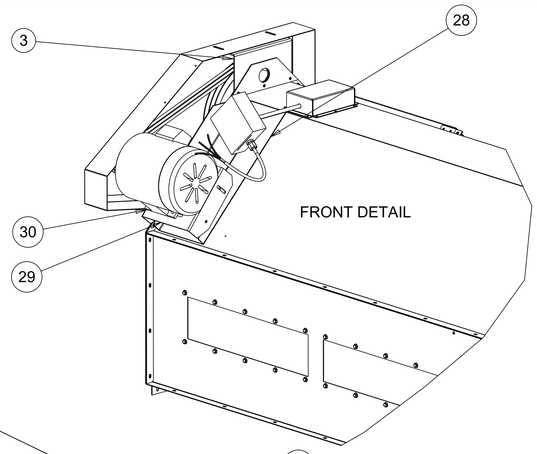

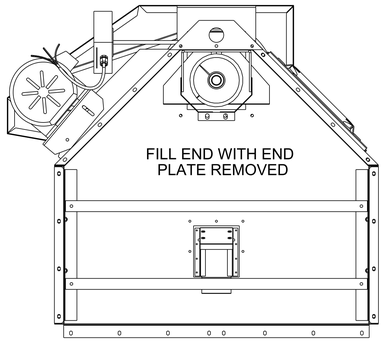

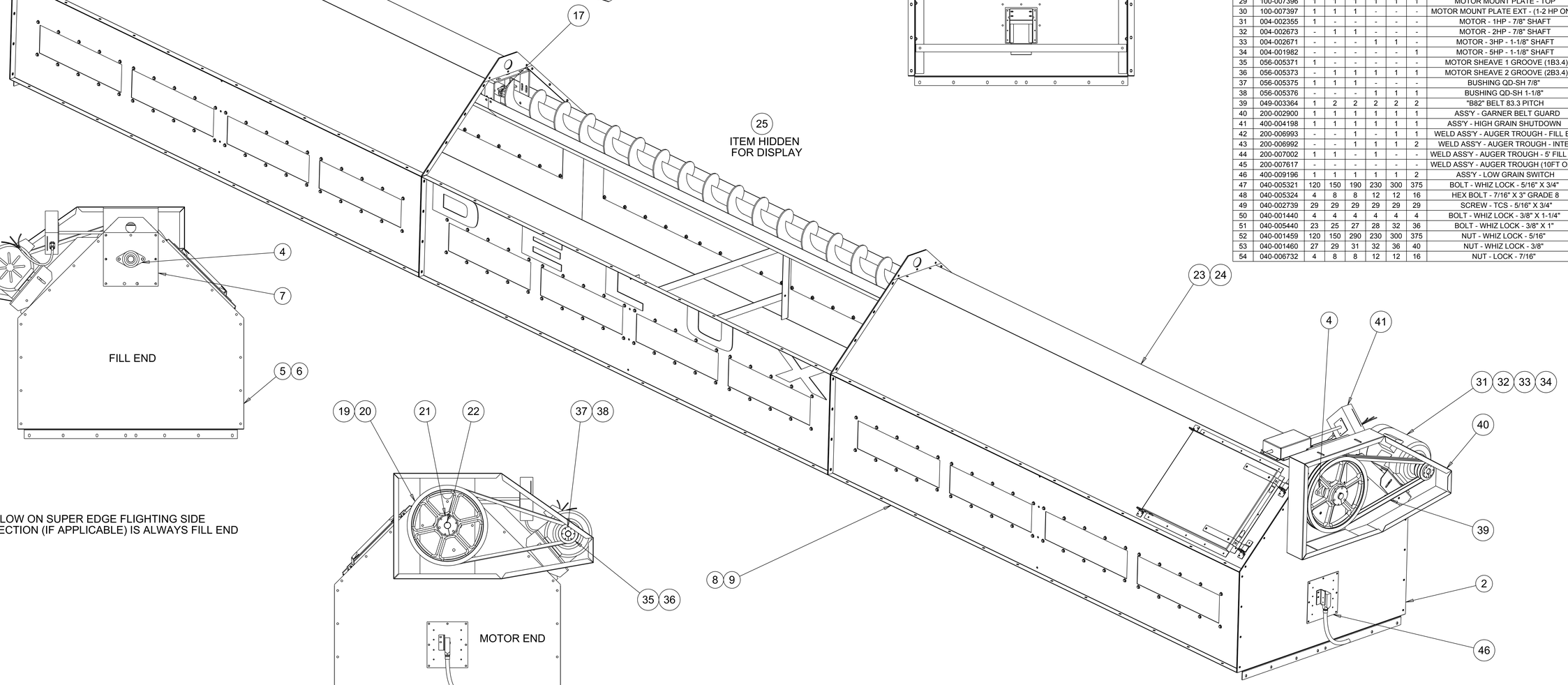

NOTES:

1) GRAIN FLOW ON SUPER EDGE FLIGHTING SIDE
2) IF 5FT SECTION (IF APPLICABLE) IS ALWAYS FILL END

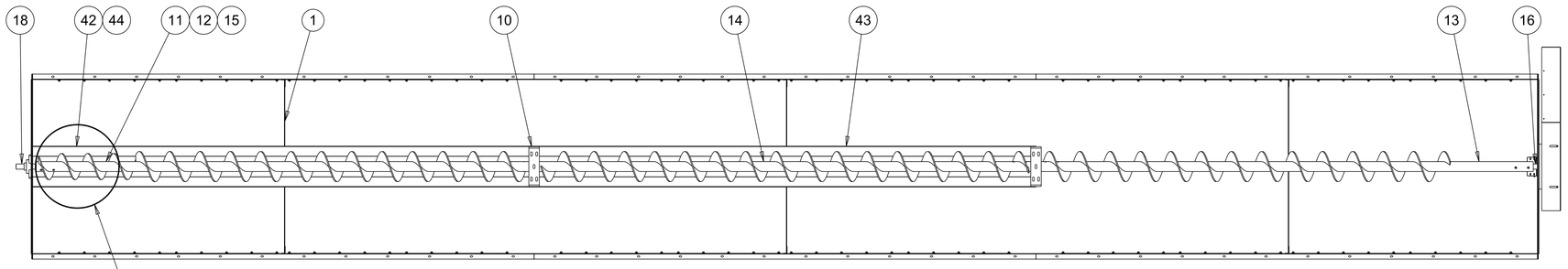

SCALE 0.078

ITEM	PART NO.	QUANTITY 10FT	15FT	20FT	25FT	30FT	40FT	DESCRIPTION
1	100-002599	2	2	4	4	6	8	CROSS STRAP
2	100-002852	1	1	1	1	1	1	END PLATE - FRONT
3	100-006824	1	1	1	1	1	1	LEVELING AUGER HEAD PLATE - FRONT
4	044-001510	2	2	2	2	2	2	1-1/4 FLANGE BEARING
5	100-006819	1	1	1	1	1	-	END PLATE - REAR
6	100-006820	-	-	-	-	-	1	END PLATE - REAR (40FT ONLY)
7	100-006825	1	1	1	1	1	1	LEVELING AUGER HEAD PLATE
8	200-007566	-	2	-	2	-	-	ASSEMBLY - GARNER SIDE 22" - 5'
9	200-007564	2	2	4	4	6	8	WELD ASS'Y - GARNER SIDE 22" - 10'
10	400-006827	-	1	1	2	2	3	ASS'Y - SUPPORT HANGER
11	200-006720	-	1	1	1	1	1	WELD ASS'Y - FILL END LEVELING AUGER - 10'
12	200-006834	1	-	-	-	-	-	WELD ASS'Y - 10' AUGER (10FT ONLY)
13	200-006723		1	1	1	1	1	WELD ASS'Y - MOTOR END - LEV. AUGER 10'
14	200-006724	-	-	-	1	1	2	WELD ASS'Y - INTERM. LEVELING AUGER
15	200-006721	-	1	-	1	-	-	WELD ASS'Y - FILL END LEV. AUGER - 5'
16	100-006727	1	1	1	1	1	1	MOTOR END LEVELING AUGER SHAFT
17	100-006726	-	1	1	2	2	3	INTERMEDIATE LEVELING AUGER SHAFT
18	100-006728	1	1	1	1	1	1	FILL END LEVELING AUGER SHAFT
19	056-005370	1	-	-	-	-	-	AUGER SHEAVE 1 GROOVE (1B18.4)
20	056-005372	-	1	1	1	1	1	AUGER SHEAVE 2 GROOVE (2B18.4)
21	056-006830	1	1	1	1	1	1	BUSHING QD-SK 1-1/4"
22	100-002486	2	2	2	2	2	2	KEY 1/4" X 1/4" X 1"
23	200-002978	1	-	-	-	-	-	WELDED ASS'Y - GARNER TOP (10' ONLY)
24	200-002974	-	1	1	1	1	1	WELD ASS'Y - GARNER TOP - MOTOR END
25	200-002976	-	-	-	1	1	2	WELDED ASS'Y - GARNER TOP - INTERM.
26	200-002978	-	-	1	-	1	1	WELDED ASS'Y - GARNER TOP - FILL END
27	200-005516	-	1	-	1	-	-	WELD ASS'Y - GARNER TOP - FILL END 5'
28	100-002855	1	1	1	1	1	1	MOTOR MOUNT PLATE - BOTTOM
29	100-007396	1	1	1	1	1	1	MOTOR MOUNT PLATE - TOP
30	100-007397	1	1	1	-	-	-	MOTOR MOUNT PLATE EXT - (1-2 HP ONLY)
31	004-002355	1	-	-	-	-	-	MOTOR - 1HP - 7/8" SHAFT
32	004-002673	-	1	1	-	-	-	MOTOR - 2HP - 7/8" SHAFT
33	004-002671	-	-	-	1	1	-	MOTOR - 3HP - 1-1/8" SHAFT
34	004-001982	-	-	-	-	-	1	MOTOR - 5HP - 1-1/8" SHAFT
35	056-005371	1	-	-	-	-	-	MOTOR SHEAVE 1 GROOVE (1B3.4)
36	056-005373	-	1	1	1	1	1	MOTOR SHEAVE 2 GROOVE (2B3.4)
37	056-005375	1	1	1	-	-	-	BUSHING QD-SH 7/8"
38	056-005376	-	-	-	1	1	1	BUSHING QD-SH 1-1/8"
39	049-003364	1	2	2	2	2	2	"B82" BELT 83.3 PITCH
40	200-002900	1	1	1	1	1	1	ASS'Y - GARNER BELT GUARD
41	400-004198	1	1	1	1	1	1	ASS'Y - HIGH GRAIN SHUTDOWN
42	200-006993	-	-	1	-	1	1	WELD ASS'Y - AUGER TROUGH - FILL END
43	200-006992	-	-	1	1	1	2	WELD ASS'Y - AUGER TROUGH - INTER.
44	200-007002	1	1	-	1	-	-	WELD ASS'Y - AUGER TROUGH - 5' FILL END
45	200-007617	-	-	-	-	-	-	WELD ASS'Y - AUGER TROUGH (10FT ONLY)
46	400-009196	1	1	1	1	1	2	ASS'Y - LOW GRAIN SWITCH
47	040-005321	120	150	190	230	300	375	BOLT - WHIZ LOCK - 5/16" X 3/4"
48	040-005324	4	8	8	12	12	16	HEX BOLT - 7/16" X 3" GRADE 8
49	040-002739	29	29	29	29	29	29	SCREW - TCS - 5/16" X 3/4"
50	040-001440	4	4	4	4	4	4	BOLT - WHIZ LOCK - 3/8" X 1-1/4"
51	040-005440	23	25	27	28	32	36	BOLT - WHIZ LOCK - 3/8" X 1"
52	040-001459	120	150	290	230	300	375	NUT - WHIZ LOCK - 5/16"
53	040-001460	27	29	31	32	36	40	NUT - WHIZ LOCK - 3/8"
54	040-006732	4	8	8	12	12	16	NUT - LOCK - 7/16"

ECO#	LET	DESCRIPTION	DATE

DRAWN BY: JGW
DATE: 01/14/09
CHK'D:
SCALE: .125

DELUX MFG. CO.
KEARNEY, NE

USED ON:
NEXT ASS'Y:
MATL.
SHEAR SIZE

TITLE:
GARNER ASSEMBLY ILLUSTRATION
DP/DPSL ILLUSTRATION
(STARTING 2010)

DRAWING NO. 900-009194

TOLERANCE: DECIMAL ± .#10 FRACTION ±1/32 ANGLE ±1° UNLESS OTHERWISE SPECIFIED

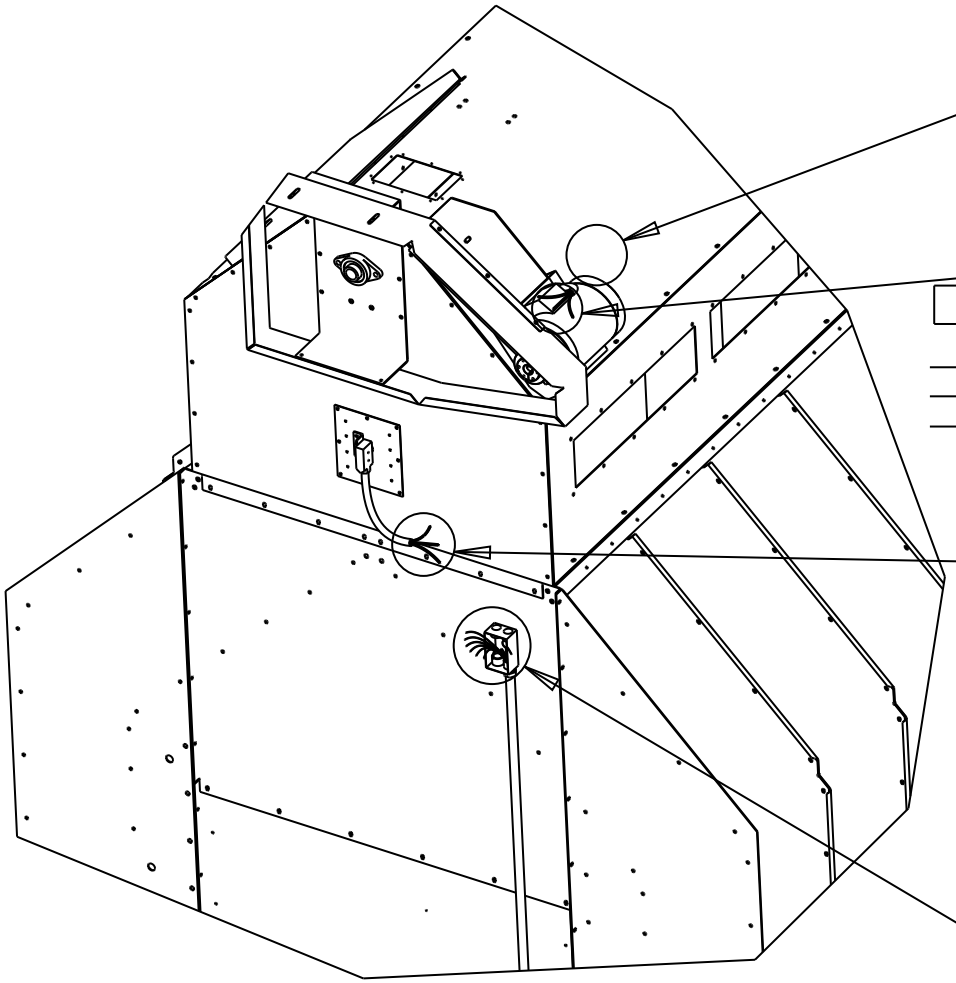

WIRING HOOKUP - HIGH GRAIN SWITCH

HIGH GRAIN WIRES		JUNCTION BOX WIRES
BLACK	⟷	BLACK
WHITE	⟷	WHITE/YELLOW
GREEN	⟷	YELLOW/GREEN

* WIRING HOOKUP - LEVELING AUGER

MOTOR LEAD		SEALTITE WIRES		JUNCTION BOX WIRES
L1	⟷	YELLOW	⟷	YELLOW
L2	⟷	ORANGE	⟷	ORANGE
L3	⟷	BROWN	⟷	BROWN

* WIRE CLUSTER'S WILL DEPEND ON VOLTAGE TYPE, REFER TO MANUFACTURER DIAGRAM

WIRING HOOKUP - LOW GRAIN SWITCH - *MOTOR END

LOW GRAIN WIRES		JUNCTION BOX WIRES
BLUE/BLACK	⟷	BLUE/BLACK
YELLOW/BLUE	⟷	YELLOW/BLUE
BLUE	⟷	BLUE

WIRING HOOKUP - LOW GRAIN SWITCH - *FILL END (40FT)

VIOLET	⟷	VIOLET
YELLOW/VIOLET	⟷	YELLOW/VIOLET
VIOLET/WHITE	⟷	VIOLET/WHITE

JUNCTION BOX

ECO#	LET	DESCRIPTION	DATE

DRAWN BY: JGW

DATE: 12/12/09

CHK'D:

SCALE: .050

DELUX MFG. CO.
KEARNEY, NE

USED ON:

NEXT ASS'Y:

MATL.:

SHEAR SIZE:

TITLE:
GARNER WIRING ILLUSTRATION
DP/DPSL/DPXSL/4T/8T/12T
STARTING WITH 2010 MODELS

DRAWING NO.: 900-009193

TOLERANCE: DECIMAL □.#010 FRACTION □#1/32 ANGLE □#1° UNLESS OTHERWISE SPECIFIED

THE EQUIPMENT SHALL BE INSTALLED IN ACCORDANCE WITH THE CURRENT INSTALLATION CODES FOR GAS BURNING APPLIANCES AND EQUIPMENT, CAN/CGA-B149.1 AND CAN/CGA-B149.2, OR APPLICABLE PROVINCIAL REGULATIONS, WHICH SHOULD BE CAREFULLY FOLLOWED IN ALL CASES. AUTHORITIES HAVING JURISDICTION SHOULD BE CONSULTED BEFORE INSTALLATIONS ARE MADE.

CANADA:

MAIN DISCONNECT PROTECTION TO BE PROVIDED BY OTHERS AND NOT MOUNTED ON OR WITHIN THE CONTROL BOX.

TB1 MAIN POWER DISTRIBUTION BLOCK — L1, L2, L3

WILD LEG

BLK (12GA.) [240V ONLY]

TRANSFORMER LINE VOLTAGE TO 120V CONTROL CIRCUIT 1.5KVA

380V 480V 575V DRYERS ONLY

F1 F2

SEE INSTRUCTIONS ON TRANSFORMER

H1 X1 X4 XMFR5

BLK (12GA)

TB4

CB1

TB3

GRN (12GA)

WHT (12GA)

WHT (12GA)

65-66-67-68-69-70-71-72

TB2 NEU POS.

120V PANEL POWER DISTRIBUTION BLOCK

2

SW1 POWER SWITCH CONTROL PANEL MOM ON NC

ORN

BLK/WHT

BLK

DS1 MAIN POWER

BLK (14GA)

25

BLK (12GA)

STARTER OVERLOAD CONTACTS

S1 S2 S3 S4 S5 S6 S7 S8

95 96

RED/BLK

BLU

29

DS2 HIGH LIMIT

BLK/WHT

ORN

30

DS3 FAN OVERLOADS

31

DS4 LOAD/UNLOAD OVERLOADS

S1 FAN #1 — S2 FAN #2 — S3 FAN #3 — S4 FAN #4 — S5 LOAD — S6 AUX LOAD — S7 UNLOAD — S8 AUX UNLOAD

L1 L2 L3 T1 T2 T3 BLK YEL ORN BRN VIO RED

MOTOR

K17 PLENUM HIGH LIMIT RELAY

ORN

28

VIO/BLU

21

K8 POWER RELAY

ORN/WHT

27

K6 BURNER RELAY

K5 FLAME SYSTEM BYPASS RELAY

BLK/WHT

BLK/WHT

ORN

BRN

18

19

ORN

K4 TEMP. RELAY

BRN/WHT

22

20

BRN/BLU

T1(-) (+) G T2 MODULATING MOTOR

GRN

TS1 PLENUM TEMPERATURE SENSOR (100 OHM RTD)

WHT RED RED

RED/WHT

88 89 90

RED RED RED

XMFR6 TRANSFORMER 120VAC TO 24VAC

ORN/BLK

BRN/BLU

RED/WHT

F1 H1 R1 S1 T1

L4 K4 BLK/BLU

R2 S2 T2 98 99

TC1 PLENUM TEMP. CONTROL (WATTLOW EZ-ZONE)

ORN ORN ORN

91 92 93

ORN/WHT

TS2 PLENUM HIGH LIMIT SENSOR (100 OHM RTD)

WHT RED RED

BLK/BLU

BLK/YEL

26

BLK/WHT

BLK/WHT

ORN

BLK/WHT

BLK/BLU

K11 DELAY ON FEEDROLL MONITOR RELAY 60 SEC

YEL/BRN

63

RED/BLK

K10 DELAY ON FEEDROLL MONITOR RELAY 60 SEC

RED

62

SW8 CAM ACTUATED LIMIT SWITCH

NO C NC

YEL/BLU

61

SW7 FEEDROLL MONITOR PANEL SWITCH

ON OFF

BLK/YEL

(BRN) JUMPERS USED AS NEEDED IN PLACE OF OPTIONAL EXHAUST LIMITS

DISCHARGE OVERFLOW

32

BRN

DS5 FEEDROLL MONITOR

DS6 DISCHARGE OVERFLOW

YEL

33

LS1 LS2 LS3 LS4

YEL/ORN

34

DS7 EXHAUST LIMITS

AUXILIARY SAFETY OPTION

ORN

35

DS8 AUX SAFETY

BLU

SW9 LOW GRAIN LOAD END

NC C NO

YEL/BLU

38

BLU/BLK

37

DS9 LOW GRAIN

SW10 LOW GRAIN FILL END

NC C NO

VIO/WHT

VIO/WHT

VIO

40

DS10 LOW GRAIN

YEL/VIO

VIO

BLU

BRN/YEL

S1 FAN #1 — S2 FAN #2 — S3 FAN #3 — S4 FAN #4

SW14 SW15 SW16 SW17

13 14

A1 A2

YEL

K13 K14 K15 FAN TIMER

(1) 11 14 (3) (2) (7) A1 A2

YEL/WHT

BRN/YEL

53

BRN/YEL

SW2 FAN SWITCH MOM ON

VIO

VIO/WHT

39

VIO

VIO

VIO

BLU

VIO

BLK (14GA)

AS1 AS2 AS3 AS4 FAN AIR SENSOR #1 #2 #3 #4

WHT BLK

YEL ORN RED WHT

54 55 56 57

DS13 DS14 DS15 DS16 FAN #1 #2 #3 #4 POWER

YEL/BLK

1

SEE DRAWING NO. 900-009131 SCHEMATIC-FLAME SYSTEM W/FIREYE BURNER CONTROLS

OPTIONAL EXTERNAL ALARM KIT

LS1

R

45

RED/WHT

K4 TEMPERATURE RELAY

A1 A2

ORN/WHT

3

ORN/WHT

M2 HOUR METER

K6 BURNER RELAY

A1 A2

BLK

16

BLK/YEL

SW23 GAS PRESSURE LIMITS SW22

NO C NC

BLK

HIGH (SET TO 18#)

LOW (SET TO 4#)

CANADIAN STANDARD ONLY

SOL2 LIQUID CUTOFF - PROPANE ONLY

SOL1 VAPOR CUTOFF - PROPANE / NAT. GAS

1 2

BLK

K9 PURGE RELAY 60 SEC.

DS17 PURGING

YEL/BLU

42

BRN/YEL

YEL/WHT

YEL

K7 FAN SENSOR RELAY 10 SEC.

BRN/YEL

YEL/BLU

36

VIO/YEL

SW3 BURNER SWITCH

ON1 OFF1 ON2 OFF2 ON3 OFF3 ON4 OFF4

C1 C2 C3 C4

YEL/BLU

DS18 BURNER READY

BLU

44

YEL/RED

BRN/WHT

VIO/WHT

43

VIO/WHT

K5 (6) 21 (5) 11 (3) A1 A2 24 HR DELAY OFF

FLAME SYSTEM BYPASS RELAY 15 SEC.

58

BRN/WHT

BLK

K8 (6) 21 24 (8) 22 (7) A1 A2 POWER RELAY

VIO

DS11 CIRCUIT

BLK

41

YEL (14GA)

YEL (14GA)

VIO

HIGH / LOW GRAIN FILL SWITCH

HIGH LOW

GRN WHT

BLK

46

BLK

SW4 LOAD SWITCH ON OFF

BLK/WHT

48

S6 AUX LOAD A2 A1

RED/WHT

S5 LOAD SW18 14 13 SW19 44 43 A2 A1

BLK/YEL

47

BLK/YEL

DS12 GRAIN LOADING

BLK/YEL

BLK/YEL

BLK/WHT

BLK/WHT

M1 DC VOLTMETER

ORN/WHT

BLU/WHT

73

74

ORN (14GA)

BLU (14GA)

BLK A1+

A2- BLK

DC MOTOR 90V

SCR1 VARIABLE SPEED DC MOTOR DRIVE KBMD-240D

L1 L2 GND A+ A- P1 P2 P3

WHT (14 GA.)

GRN (14 GA.)

ORN (14GA)

BLU (14GA)

BLU/WHT

RED/WHT

YEL/BRN

77

BLK (14GA)

75

BLK/WHT

76

SW6 FEEDROLL MAN / OFF / AUTO

6 4 1 5 MAN 2 AUTO 3

K12 AUTO MOISTURE RELAY

(6) 24 21 (8) 22 (1) 11 (3) 14 (4) 12 (7) A1 A2

BLU

YEL/BLU

RED

YEL/RED

BLK/WHT

81

80

78

YEL/RED

RV1 MANUAL UNLOAD SPEED CONTROL

1 2 3

79

BLU

RED

YEL/BLU

TC2 AUTO MOISTURE CONTROL (WATTLOW EZ-ZONE)

F1 G1 R1 S1 T1 99 98

YEL

YEL/WHT

WHT

85 86 87

TS3 AUTO MOISTURE SYSTEM SENSOR (100 OHM RTD)

YEL YEL/WHT WHT

S7 UNLOAD SW21 14 13 A2 A1

S8 AUX UNLOAD SW20 14 13 A2 A1

BRN/WHT

BRN

BRN

49

SW5 UNLOAD SWITCH ON OFF

BRN

DS19 GRAIN UNLOAD

VIO

BLK/WHT

✱NOTE: COMPONENTS WITH ✱ ARE LOCATED OUTSIDE OF THE CONTROL BOX.

STARTING WITH 2010 MODELS

ECO#	LET	DESCRIPTION	DATE

DRAWN BY: MEL

DATE: 10/15/09

CHK'D:

SCALE: NONE

DELUX MFG. CO.
KEARNEY, NE

USED ON: DP, DPSL, DPX, DPXSL, 4T, 8T, 12T

NEXT ASS'Y:

MATL.

SHEAR SIZE

TITLE: SCHEMATIC WITH PID, IEC AND MODULATING MOTOR DP THROUGH 12T SERIES

DRAWING NO. 900-009130

TOLERANCE: DECIMAL ±.010 FRACTION ±1/32 ANGLE ±1° UNLESS OTHERWISE SPECIFIED

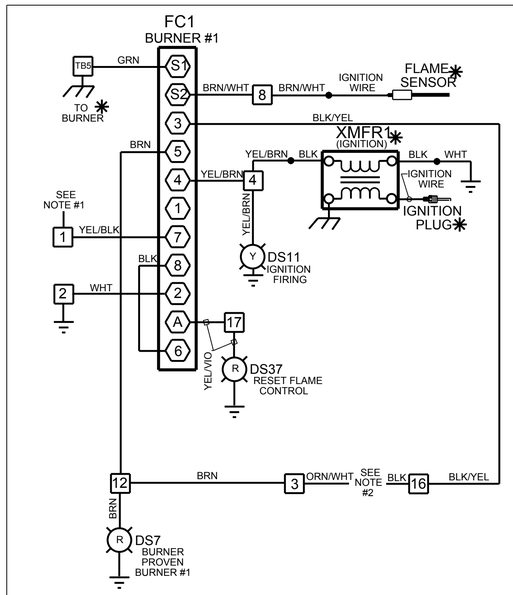

1 BURNER SYSTEM

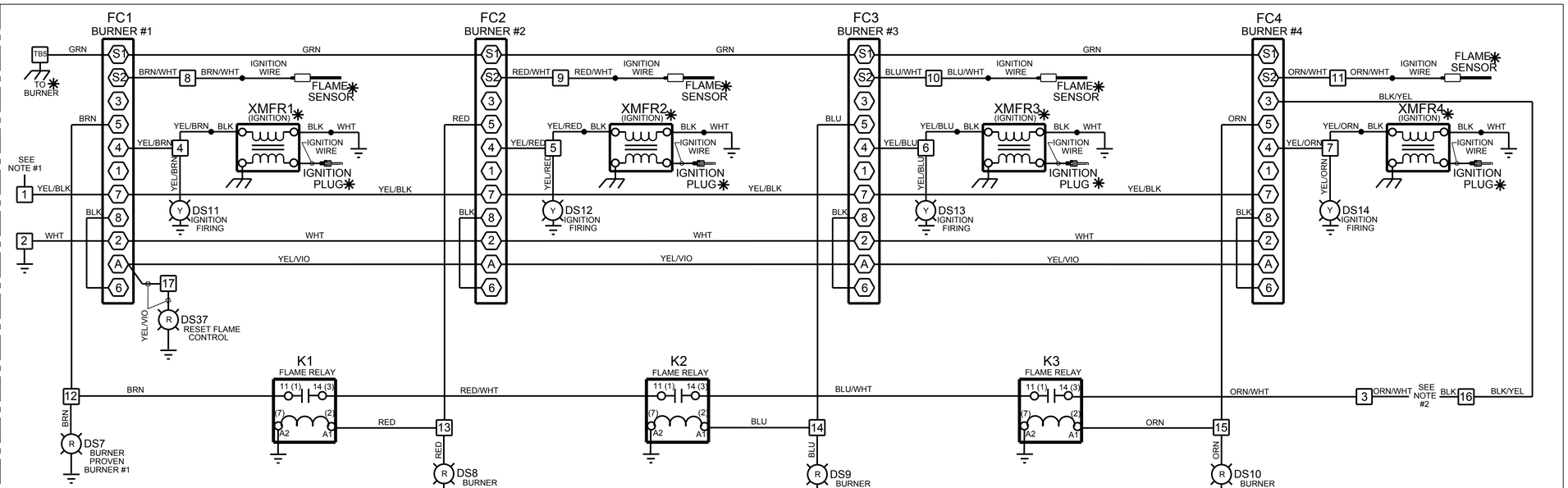

4 BURNER SYSTEM

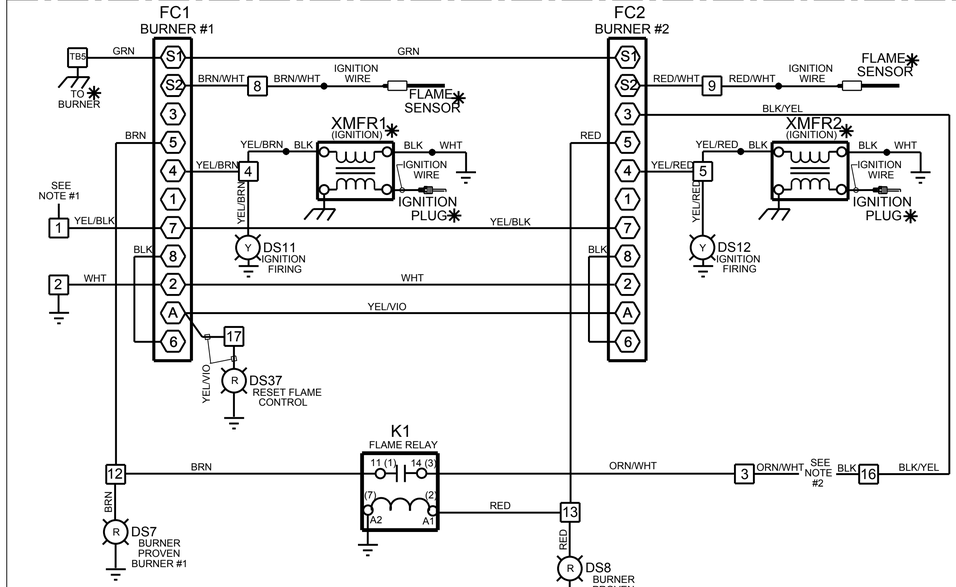

2 BURNER SYSTEM

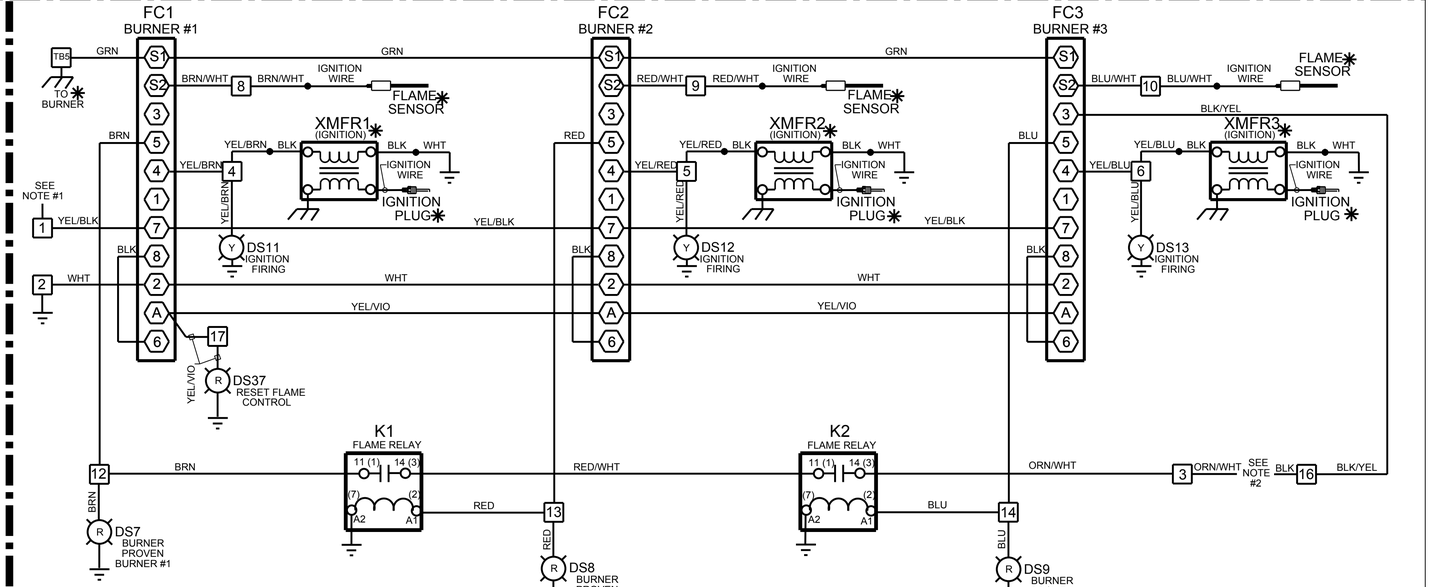

3 BURNER SYSTEM

NOTES:

1. 1 YEL/BLK — TO SW3-N/O-4
2. 16 BLK — TO SOLENOID VALVES
   3 ORN/WHT — TO K6-A1 (2)

USE THIS DRAWING IN CONJUNCTION WITH SCHEMATIC 900-009130 AS SHOWN IN NOTES 1 AND 2.

✱NOTE: COMPONENTS WITH ✱ ARE LOCATED OUTSIDE OF THE CONTROL BOX.

STARTING IN 2010

ECO#	LET	DESCRIPTION	DATE

DRAWN BY: MEL
DATE: 10/12/09
CHK'D:
SCALE: NONE

DELUX MFG. CO.
KEARNEY, NE

USED ON:
NEXT ASS'Y: DP/SL, DPX/SL, 4T, 8T, 12T

MATL.
SHEAR SIZE

TITLE:
SCHEMATIC
FIREYE FLAME SYSTEM
USED WITH SCHEMATIC
900-009130
(PID, IEC, MOD. MOTOR)

DRAWING NO. 900-009137

TOLERANCE: DECIMAL ±.010 FRACTION ±1/32 ANGLE ±1° UNLESS OTHERWISE SPECIFIED

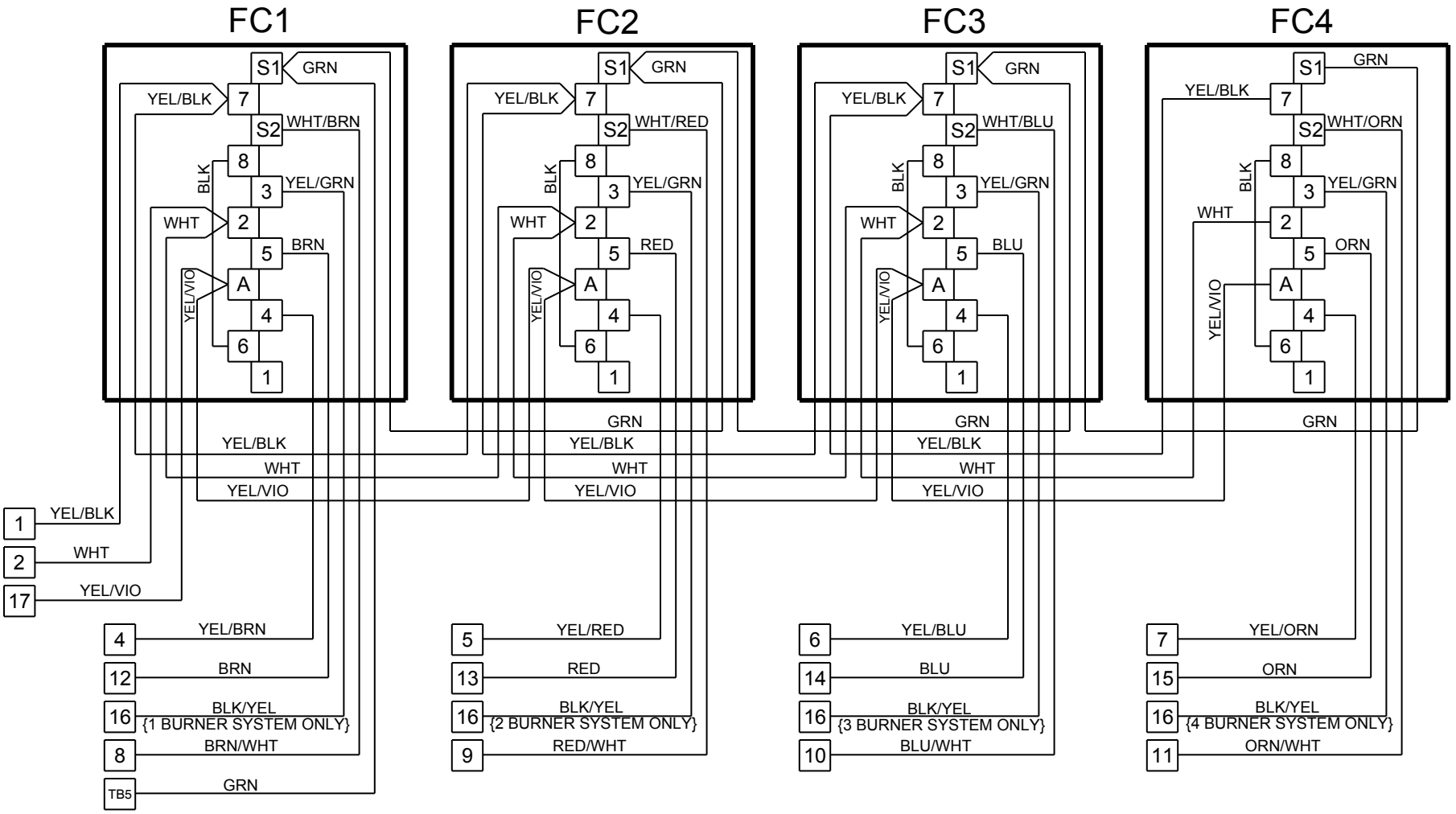

STARTING WITH 2010 MODELS

ECO#	LET	DESCRIPTION	DATE

DRAWN BY: JGW

DATE: 12/11/09

CHK'D:

SCALE: NONE

DELUX MFG. CO.
KEARNEY, NE

USED ON:

NEXT ASS'Y:

MATL.

SHEAR SIZE

TITLE:
WIRING DIAGRAM
FIREYE SYSTEM BASE
REF: 900-009130 - MASTER
REF: 900-009137 - MASTER

DRAWING NO. 900-009188

TOLERANCE: DECIMAL □.#10 FRACTION □#1/32 ANGLE □#° UNLESS OTHERWISE SPECIFIED

ITEM	DESCRIPTION
1	MANUAL BALL VALVE
2	PRESSURE GAUGE
3	PRESSURE SWITCH - LOW
4	ELECTRONIC SOLENIOD VALVE (FAIL SAFE)
5	PRESSURE GAUGE - HIGH
6	ELECTRIC BUTTERFLY VALVE (TEMP. CONTROL)
7	PRESSURE GAUGE
8	MANUAL BALL VALVE
9	BURNER #1
10	BURNER #2
11	BURNER #3
12	BURNER #4
13	ORIFICE - BURNER #1
14	ORIFICE - BURNER #2
15	ORIFICE - BURNER #3
16	ORIFICE - BURNER #4

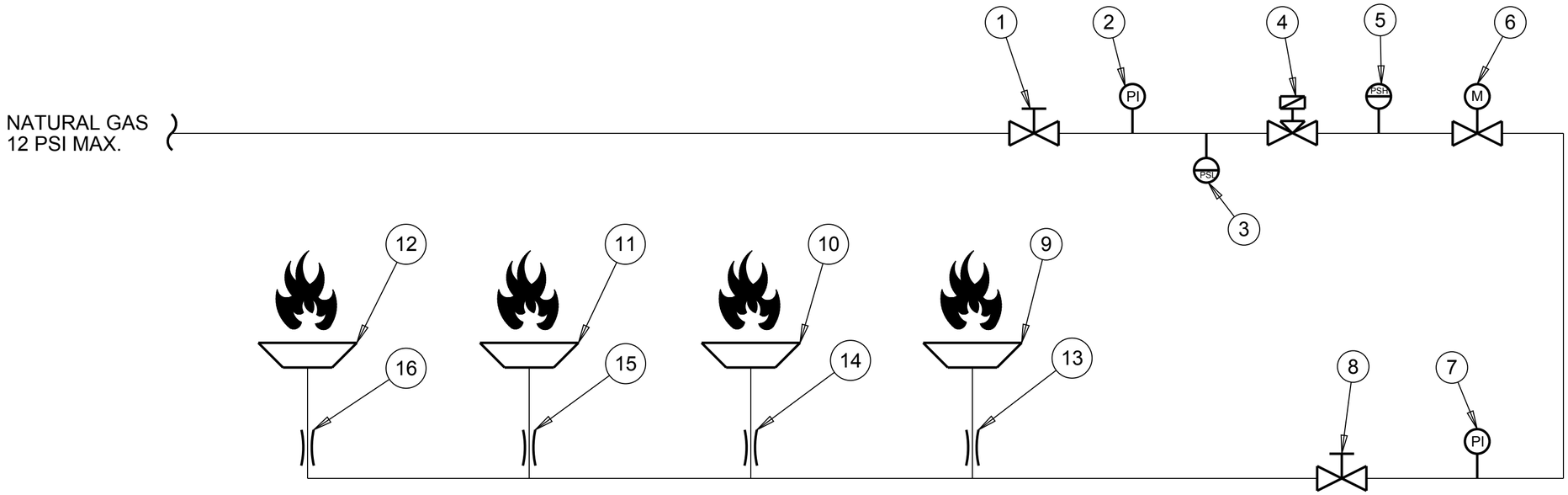

				DRAWN BY	**DELUX MFG. CO.**		TITLE:
				JGW	KEARNEY, NE		PLUMBING SCHEMATIC NATURAL GAS - CSA DP/DPSL, DPX/SL, 4T, 8T, 12T
				DATE			
				01/11/10			
				CHK'D	USED ON:		
					NEXT ASS'Y:		
				SCALE	MATL.	SHEAR SIZE	DRAWING NO.
ECO#	LET	DESCRIPTION	DATE				900-009218

TOLERANCE: DECIMAL ±.010 FRACTION ±1/32 ANGLE ±1 UNLESS OTHERWISE SPECIFIED

ITEM	DESCRIPTION
1	PRESSURE RELIEF VALVE
2	STRAINER
3	QUICK ACTING CUT-OFF
4	PRESSURE RELIEF VALVE
5	ELECTRIC SOLENOID VALVE (VAPOR)
6	PRESSURE RELIEF VALVE
7	INTERNAL VAPORIZER
8	PRESSURE REGULATOR WITH GAUGE
9	PRESSURE SWITCH - LOW
10	PRESSURE SWITCH - HIGH
11	ELECTRIC BUTTERFLY VALVE (TEMP. CONTROL)
12	PRESSURE GAUGE
13	MANAUL BALL VALVE
14	BURNER #1
15	BURNER #2
16	BURNER #3
17	BURNER #4
18	ORIFICE - BURNER #1
19	ORIFICE - BURNER #2
20	ORIFICE - BURNER #3
21	ORIFICE - BURNER #4

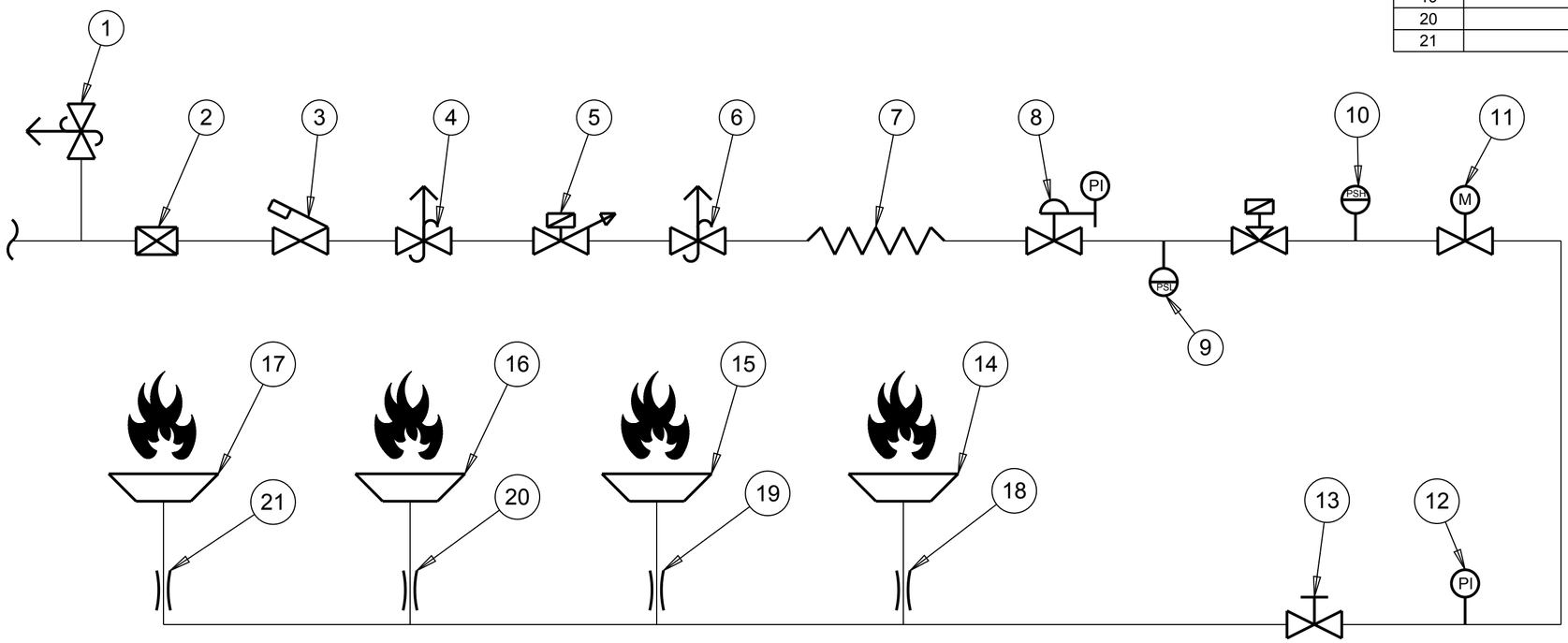

				DRAWN BY	**DELUX MFG. CO.**		TITLE:
				JGW	KEARNEY, NE		PLUMBING SCHEMATIC LIQUID PROPANE - CSA DP/DPSL, DPX/SL, 4T, 8T, 12T
				DATE			
				01/11/10			
				CHK'D	USED ON:		
					NEXT ASS'Y:		
				SCALE	MATL.	SHEAR SIZE	DRAWING NO.
ECO#	LET	DESCRIPTION	DATE				900-009217

TOLERANCE: DECIMAL ±.010 FRACTION ±1/32 ANGLE ±1 UNLESS OTHERWISE SPECIFIED

ITEM	DESCRIPTION
1	MANUAL BALL VALVE
2	PRESSURE GAUGE
3	ELECTRIC SOLENIOD VALVE
4	ELECTRIC BUTTERFLY VALVE (TEMP. CONTROL)
5	PRESSURE GAUGE
6	BURNER #1
7	BURNER #2
8	BURNER #3
9	BURNER #4
10	ORIFICE - BURNER #1
11	ORIFICE - BURNER #2
12	ORIFICE - BURNER #3
13	ORIFICE - BURNER #4

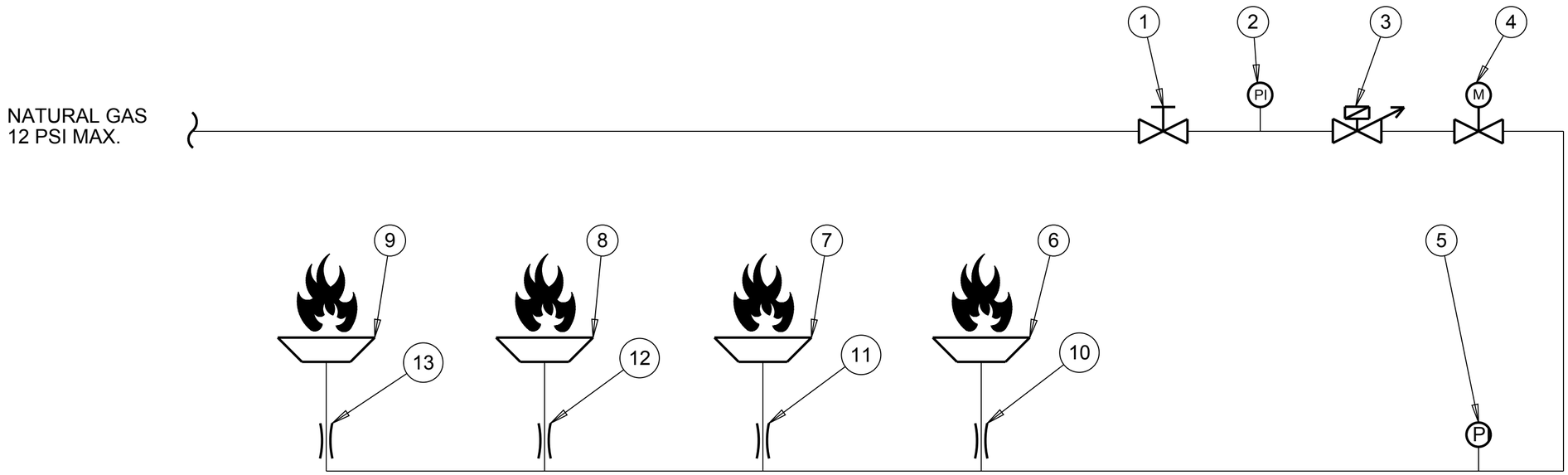

				DRAWN BY JGW	**DELUX MFG. CO.** KEARNEY, NE		TITLE: PLUMBING SCHEMATIC NATURAL GAS - NON-CSA DP/DPSL, DPX/SL, 4T, 8T, 12T
				DATE 01/11/10			
				CHK'D	USED ON:		
					NEXT ASS'Y:		
				SCALE	MATL.	SHEAR SIZE	DRAWING NO. 900-009216
ECO#	LET	DESCRIPTION	DATE				

TOLERANCE: DECIMAL ±.010 FRACTION ±1/32 ANGLE ±1 UNLESS OTHERWISE SPECIFIED

ITEM	DESCRIPTION
1	QUICK ACTING CUT-OFF
2	PRESSURE RELIEF VALVE
3	STRAINER
4	ELECTRIC SOLENIOD VALVE (LIQUID)
5	PRESSURE RELIEF VALVE
6	INTERNAL VAPORIZER
7	PRESSURE REGULATOR WITH GAUGE
8	MANUAL BALL VALVE
9	ELECTRIC SOLENIOD VALVE (VAPOR)
10	ELECTRIC BUTTERFLY VALVE (TEMP. CONTROL)
11	PRESSURE GAUGE
12	BURNER #1
13	BURNER #2
14	BURNER #3
15	BURNER #4
16	ORIFICE - BURNER #1
17	ORIFICE - BURNER #2
18	ORIFICE - BURNER #3
19	ORIFICE - BURNER #4

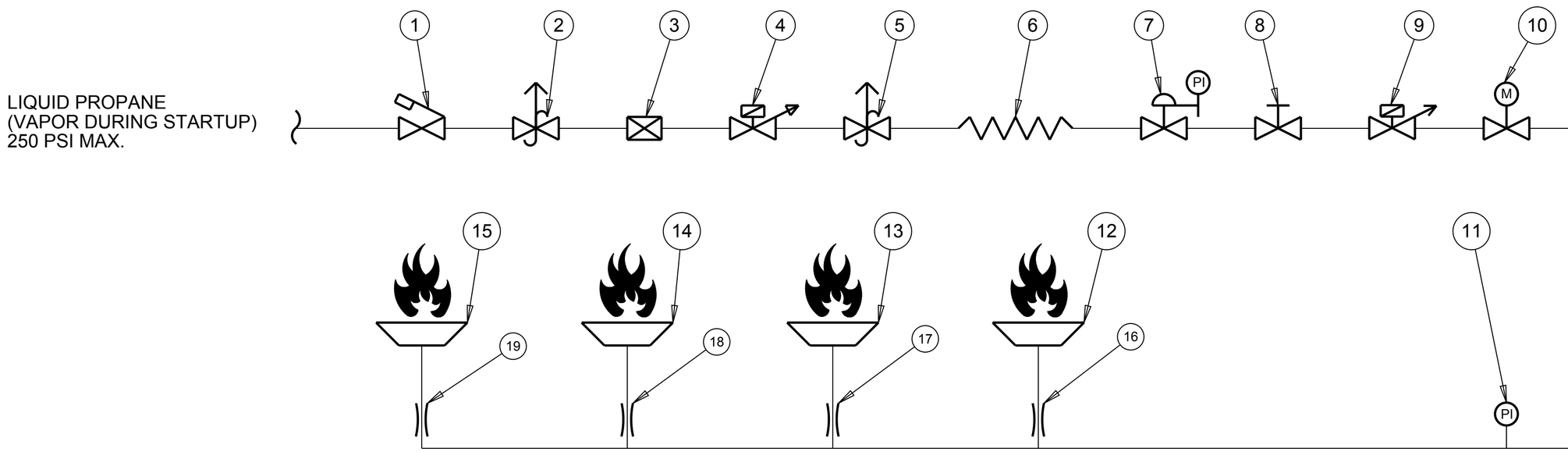

				DRAWN BY	**DELUX MFG. CO.**		TITLE:
				JGW	KEARNEY, NE		PLUMBING SCHEMATIC LIQUID PROPANE - NON-CSA DP/DPSL, DPX/SL, 4T, 8T, 12T
				DATE			
				01/11/10			
				CHK'D	USED ON:		
					NEXT ASS'Y:		
				SCALE	MATL.	SHEAR SIZE	DRAWING NO.
ECO#	LET	DESCRIPTION	DATE				900-009215

TOLERANCE: DECIMAL □ ±.010 FRACTION □ ±1/32 ANGLE □ ±1 UNLESS OTHERWISE SPECIFIED

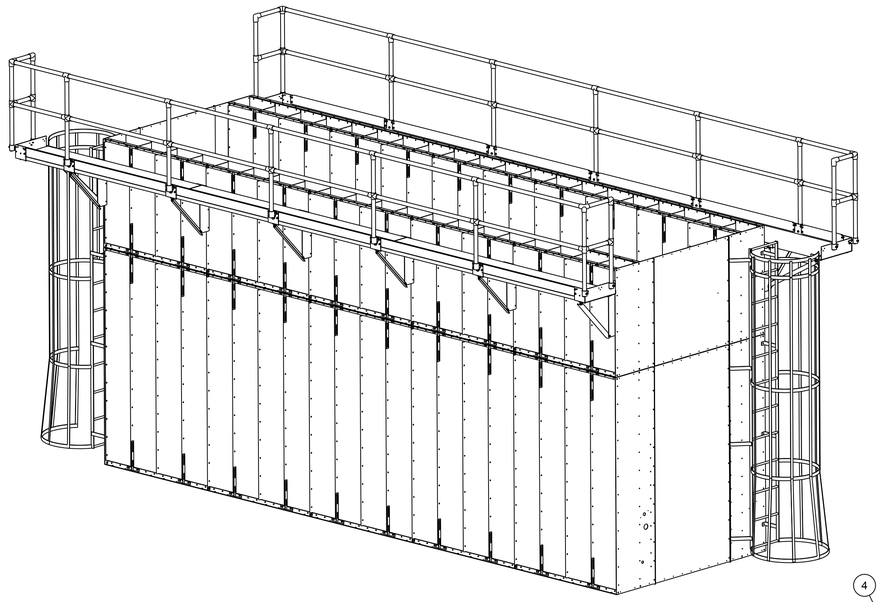

SCALE 0.031
REFERENCE VIEW FOR
DPX12T (SHOWN), DPX8T & DPX4T

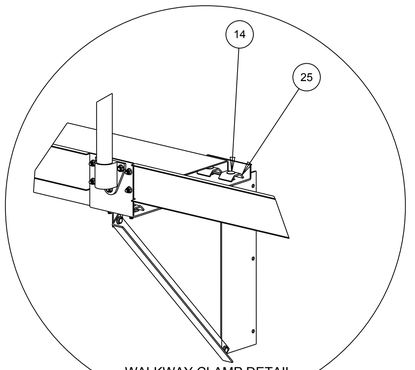

WALKWAY CLAMP DETAIL
SCALE 0.125

ITEM	PART NUMBER	QTY (ONE SIDE ONLY)						DESCRIPTION
		10FT	15FT	20FT	25FT	30FT	40FT	
1	034-001397	2	2	2	2	2	2	PIPE FITTING - ELL
2	034-001398	2	3	4	5	6	8	PIPE FITTING - CROSS
3	034-001399	2	2	2	2	2	2	PIPE FITTING - S/O ELBOW
4	034-001400	2	2	2	2	2	2	PIPE FITTING - S/O TEE
5	034-001404	2	3	4	5	6	8	PIPE FITTING - BASE
6	034-001782	4	5	6	7	8	10	PIPE FITTING - TEE
7	038-001411-120000	-	1	1	2	2	3	GRIP STRUT - 18" X 1-1/2" X 120"
8	038-001411-90000	1	1	1	1	1	1	GRIP STRUT - 18" X 1-1/2" X 90"
9	040-001459	12	16	20	24	28	36	NUT - WHIZ LOCK - 5/16-18UNC
10	040-001460	32	42	52	62	72	92	NUT - WHIZ LOCK - 3/8-16UNC
11	040-002193	14	20	26	34	40	52	BOLT - WHIZ LOCK - 3/8-16UNC X 3/4
12	040-002739	8	8	8	8	8	8	SCREW - TCS - HEX - 5/16-18UNC X 3/4
13	040-005321	12	16	20	24	28	36	BOLT - WHIZ LOCK - 5/16-18UNC X 3/4"
14	040-008665	16	20	24	28	32	40	BOLT - CARRIAGE - 3/8-18UNC X 1-1/4
15	100-000122	6	7	8	9	10	12	PIPE RAILING - 38"
16	100-002215	3	4	5	6	7	9	SUPPORT ANGLE - WALKWAY
17	100-006055	3	4	5	6	7	9	CATWALK SUPPORT BRACKET
18	100-006350	2	2	2	2	2	2	PIPE RAILING - 62-1/4"
19	100-006357	2	2	2	2	2	2	PIPE RAILING - 11"
20	100-006359	2	2	2	2	2	2	PIPE RAILING - 30"
21	100-006360	1	2	3	4	5	7	PIPE RAILING - 58"
22	100-006363	1	1	1	1	1	1	WALKWAY SUPPORT - FRONT/REAR
23	100-008485	1	2	3	4	5	7	PIPE RAILING - 59-1/2"
24	100-008496	1	2	3	4	5	7	WALKWAY TOE GUARD - INTERMEDIATE
25	100-008623	16	20	24	28	32	40	WALKWAY CLAMP
26	100-008635	1	1	1	1	1	1	WALKWAY TOE GUARD - 30" EXT. TO LADDER
27	100-008636	1	1	1	1	1	1	WALKWAY TOE GUARD - LADDER END LONG
28	100-008701	2	2	2	2	2	2	PIPE RAILING - 14"
29	200-002274	3	3	3	3	3	3	W.A. - HANDRAILING BRACKET - RIGHT
30	200-007387	1	1	1	1	1	1	W.A. - HANDRAILING BRACKET - LEFT
31	200-008637	1	1	1	1	1	1	W.A. - WLKWY BRKT AT LADDER EXTENSION
32	200-008638	1	1	1	1	1	1	W.A. - WLKWY BRKT - END BRKT - SIDE WLKWY
33	200-008639	2	3	4	5	6	8	W.A. - WLKWY BRKT - INT - SIDE WLKWY - TAB MID

**NOTES:
1) ITEMS 15-16, 18-23 & 28 ARE SHIPPED WHEN FACTORY INSTALLED
2) QTY'S SHOWN ARE FOR ONE SIDE OF THE DRYER ONLY.
3) ILLUSTRATION DRAWING SHOWN IS A 25FT DRYER.
4) PLANK LENGTHS AS NEEDED PER DRYER LENGTH.
- 90" (8) ALWAYS GOES TO LADDER END
- 120" (7) IS NOMINAL LENGTH. RAW MATERIAL MAY BE LONGER AND CAN BE USED AS SUCH.

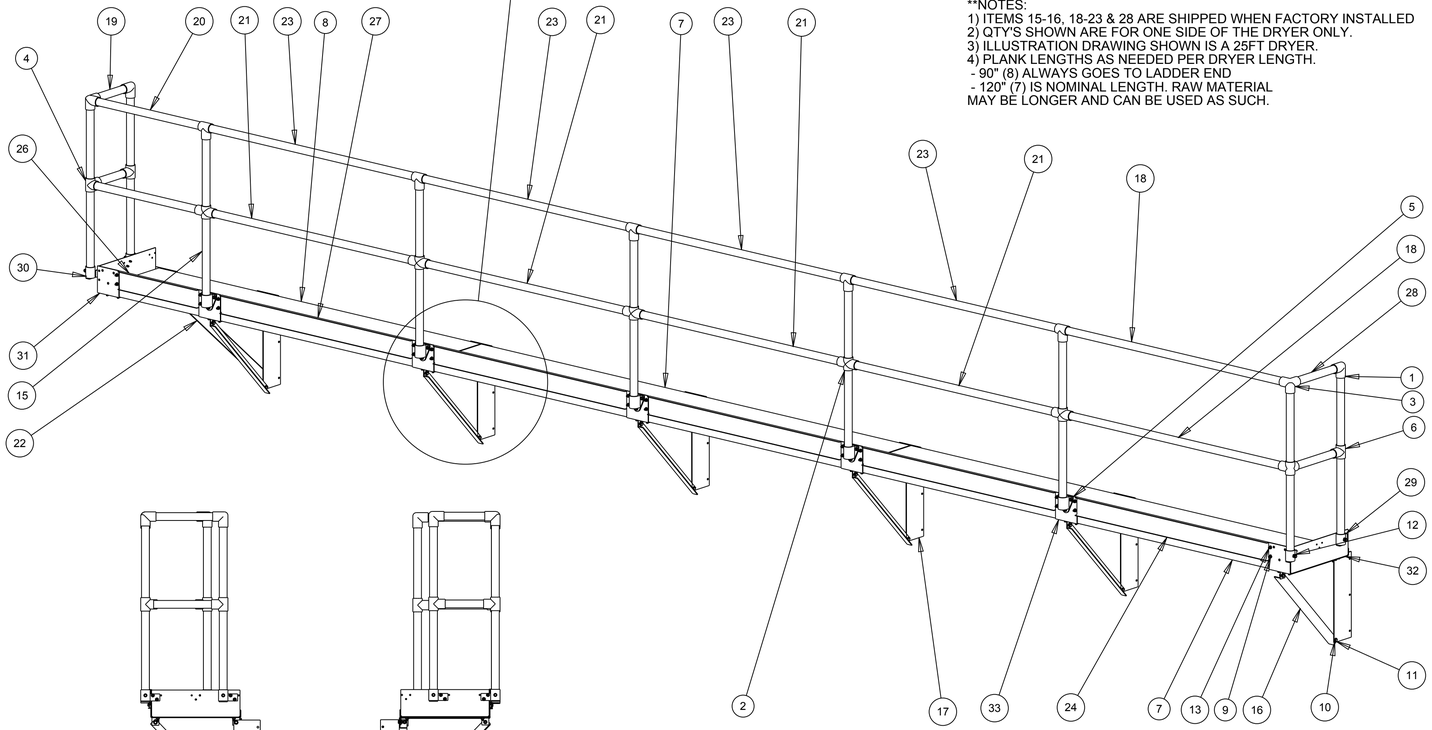

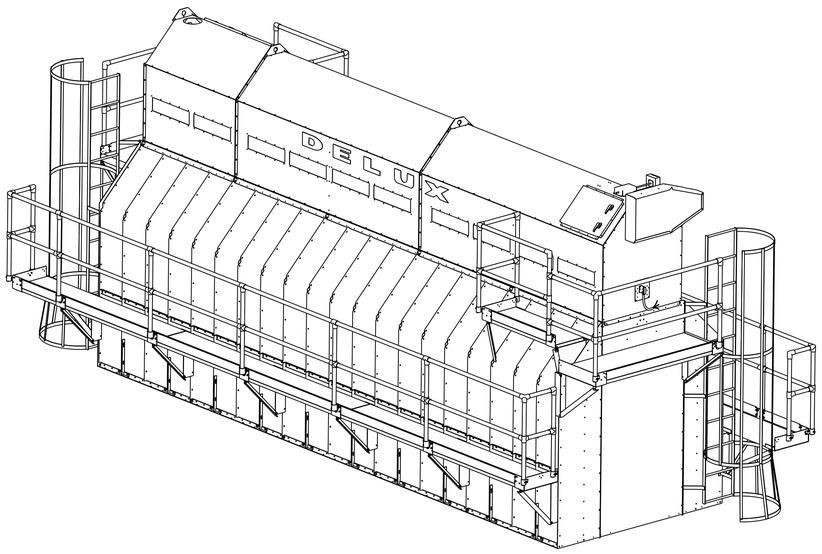

SCALE 0.031
REFERENCE VIEW FOR
DPX & DPXSL ROOF

NON-LADDER END
VIEW

LADDER END
VIEW

				DRAWN BY	DELUX MFG. CO. KEARNEY, NE	TITLE:
				JGW		ILLUSTRATION DRAWING SIDE WALKWAY DPX/SL, 4T, 8T, 12T
				DATE 08/09/06		
				CHK'D	USED ON:	
	B	ELIMINATE 62-1/4 PLANK (28)	04/27/07		NEXT ASS'Y:	
	A	RIGHT BRKT WAS LEFT	02/21/07	SCALE .063	MATL. / SHEAR SIZE	DRAWING NO. 900-008640
ECO#	LET	DESCRIPTION	DATE			

TOLERANCE: DECIMAL ± .010 FRACTION ± 1/32 ANGLE ± 1° UNLESS OTHERWISE SPECIFIED

GENERAL OPERATOR MAINTENANCE

SAFETY CODE---------USE CAUTION IN OPERATING THIS EQUIPMENT.

THE DESIGN AND MANUFACTURE OF THIS DRYER IS DIRECTED TOWARD OPERATOR SAFETY.

USE EXTREME CAUTION IN WORKING AROUND HIGH SPEED FANS, GAS AND OIL FIRED BURNERS, DISCHARGE AUGERS, AND AUXILIARY AUGERS, WHICH MAY START WITHOUT WARNING WHEN THE DRYER IS OPERATING ON AUTOMATIC CONTROLS.

CONTINUED SAFE, DEPENDABLE OPERATION OF AUTOMATIC EQUIPMENT DEPENDS TO A GREAT DEGREE UPON THE OWNER. FOR A SAFE DEPENDABLE DRYING SYSTEM, FOLLOW THE RECOMMENDATIONS WITHIN THE MANUAL AND MAKE IT A PRACTICE TO REGULARLY INSPECT THE OPERATION OF THE UNIT FOR ANY DEVELOPING PROBLEMS OR UNSAFE CONDITIONS.

KEEP A CLEAN DRYER

DO NOT ALLOW FINE MATERIAL TO ACCUMULATE ON THE PLENUM FLOOR OR A TRASH FIRE CAN RESULT

CHECKING THE DRYER EVERY 24 HOURS AND CLEANING WILL HELP PREVENT PROBLEMS. THE DRYER SHOULD NOT BE LEFT UNATTENDED FOR EXTENDED PERIODS OF TIME.

SAFETY FIRST!

USE ONLY APPROVED LADDERS AND WALKWAYS TO GAIN ACCESS TO THE DRYER.

DISCONNECT AND LOCKOUT ALL ENERGY SOURCES TO THE DRYER BEFORE REPAIR OR MAINTENANCE IS PERFORMED.

BE SURE ALL GUARDS AND SHIELDS ARE IN PLACE BEFORE OPERATING THE DRYER.

PREPARING DRYER FOR OPERATION

CHECK ALL SAFETY CONTROLS FOR PROPER OPERATION.

CHECK FOR WORN OR BROKEN PARTS THAT NEED TO BE REPLACED.

LUBRICATE PER INSTRUCTION LITERATURE LOCATED IN SECTION 14.

OPEN AIR INTAKES DOORS.

CHECK BELTS FOR WEAR AND TENSION.

CHECK CHAIN TENSION AND SPROCKET ALIGNMENT.

RUN FANS AND DISCHARGE SYSTEM TO ASSURE PROPER FUNCTION.

CLEAN FUEL STRAINER-DRAIN FUEL LINES.

DURING SEASON

INSPECT PLENUM AND COOLING CHAMBERS DAILY. CLEAN OUT ANY ACCUMULATION OF DIRT, CHAFF, FINES, ETC.

CHECK FEEDROLLS FOR PROPER GRAIN FLOW.

CHECK CHAIN AND BELT ALIGNMENT DAILY.

INSPECT EXTERIOR SCREENS FOR PLUGGING--CLEAN FOR EFFECTIVE DRYING.

POST SEASON SERVICE

TURN OFF ALL FUEL AND POWER TO THE DRYER.

CLEAN OUT PLENUM AND COOLING CHAMBERS, GRAIN COLUMNS AND AUGERS.

CLEAN EXTERIOR OF DRYER.

LEAVE AUGER SLIDE GATES OPEN FOR DRAINAGE.

CLEAN FUEL STRAINER-DRAIN FUEL LINES.

LUBRICATE PER INSTRUCTIONS - SECTION 14.

APPLY PROTECTIVE COATING TO CHAIN AND SPROCKETS.

INSPECT FOR WORN/DAMAGED PARTS THAT SHOULD BE REPLACED.

KEEP ALL ACCESS DOORS CLOSED.

GENERAL LUBRICATION

1. GEAR DRIVES

   A. LUBRICATION LEVELS TO BE CHECKED ON INITIAL STARTUP.
   B. LUBRICATE PER INSTRUCTION PLATE ON GEAR HEAD.

2. AUGER BEARINGS

   A. BEARINGS USED ARE OF THE PERMANENTLY LUBRICATED TYPE.

3. AUGER HANGER BEARINGS

   A. BEARINGS USED ARE OF THE PERMANENTLY LUBRICATED TYPE.

4. ROLLER CHAIN

   A. SPRAY WITH RUST PREVENTATIVE LUBRICANT AT THE END OF EACH SEASON.

5. FAN MOTOR

   A. FOLLOW MANUFACTURER'S INSTRUCTIONS.

DELUX Continuous flow GRAIN DRYERS

REPLACEMENT PARTS AND CHARTS

MODELS

MSF

MSF 31010 - CF (10FT)	MSF 62520 - CF (15FT)
MSF 31010 - AB (10FT)	MSF 62520 - AB (15FT)
MSF 41515 - CF(10FT)	MSF 72525 - CF (15FT)
MSF 41515 - AB (10FT)	MSF 72525 - AB (15FT)

MSF2

MSF2 5217 (10FT)	MSF2 7825 (15FT)
MSF2 10435 (20FT)	MSF2 13050 (25FT)

DP - DPSL

DP 2510 (10FT)	DP 3015 (10FT)	DPSL 3520 (10FT)
DP 3015 (10FT)	DP 4025 (15FT)	DPSL 4530 (15FT)
DP 4020 (15FT)	DP 6030 (20FT)	DPSL 7040 (20FT)
DP 5020 (20FT)	DP 7550 (25FT)	DPSL 8560 (25FT)
DP 7530 (30FT)	DP 9045 (30FT)	DPSL 10560 (30FT)

DPX-DPXSL

DPX 4525 (10FT)	DPXSL 5030 (10FT)
DPX 7040 (15FT)	DPXSL 8050 (15FT)
DPX 9045 (20FT)	DPXSL 10060 (20FT)
	DPXSL 12560 (25FT)
DPX 13575 (30FT)	DPXSL 15090 (30FT)
DPX 180100 (40FT)	DPXSL 200120 (40FT)

DPX4T-DPX8T-DPX12T

DPX4T 5630(10FT)	DPX8T 6440(10FT)	DPX12T 7250(10FT)
DPX4T 8460(15FT)	DPX8T 9660(15FT)	DPX12T 10860(15FT)
DPX4T 11260(20FT)	DPX8T 12880(20FT)	DPX12T 144100(20FT)
DPX4T 140100(25FT)	DPX8T 160120(25FT)	DPX12T 175120(25FT)
DPX4T 16890(30FT)	DPX8T 192120(30FT)	DPX12T 216150(30FT)
DPX4T 224120(40FT)	DPX8T 256160(40FT)	DPX12T 288200(40FT)

DELUX MFG. CO.
4650 AIRPORT ROAD, P.O. BOX 1027
KEARNEY, NE 68848-1027
308-237-2274 FAX: 308-234-3765
800-658-3240

MODEL NO:_____LENGTH_____FT

SERIAL NO:____-____-____-_____-_____

SALES ORDER NO:_____

SPECIFICATIONS

MSF/DP/DPSL/DPX/DPXSL/DPX4T/DPX8T/DPX12T

MSF (2010- UP) SCHEMATIC: 900-009212

DP-SL/DPX-SL/DPX4-8-12T (2010- UP) SCHEMATIC: 900-009130

FUEL: [ ] NG-NATURAL GAS [ ] LP-LIQUID PROPANE [ ] OTHER_____

VOLTAGE: [ ]230V-1P 60HZ [ ]240V-3P 60HZ [ ]380V-3P 50HZ [ ]480V-3P 60HZ [ ]575V-3P 60HZ

PHASE CONVERTER BRAND:_____ MODEL:_____ SIZE:_____

DOOR LOCK – AUSTIN: [ ] KEY # BP112

CONTROL CIRCUIT

PART DESCRIPTION - INFORMATION	DELUX PART NUMBER
DISTRIBUTION BLOCK: 2 POLE 350 MCM	005-004765
DISTRIBUTION BLOCK: 3 POLE 350 MCM	005-003090
DISTRIBUTION BLOCK: 3 POLE 500 MCM	005-005724
DISTRIBUTION BLOCK: 3 POLE 500 MCMX2	005-006018
STEP DOWN TRANSFORMER: GE - 1.5 KVA - 380V	008-006351
STEP DOWN TRANSFORMER: GE - 1.5 KVA - 480V	008-001928
STEP DOWN TRANSFORMER: GE - 1.5 KVA - 575V	008-007420
FUSE BLOCK: 2P – 600V – 30A	005-000683
FUSE: STEP DOWN TRANSFORMER: FRS 7 - 380V	000-000553
FUSE: STEP DOWN TRANSFORMER: FRS 7 - 480V	000-000553
FUSE: STEP DOWN TRANSFORMER: FRS 5 - 575V	000-001862
CONTROL CIRCUIT BREAKER	015-008993
MAIN POWER LIGHT: NEON - CLEAR	019-005684
POWER SWITCH: TOGGLE - MOM-ON OFF	010-005474
BOOT PROTECTOR: POWER SWITCH	016-004791

CONTROL CIRCUIT

HOUR METER (LOWER PANEL): HOBBS - 20001-18	016-006717
POWER RELAY: 8 PIN - DPDT - 120V	007-000725
RELAY SOCKET: 8 PIN 120V - POWER	007-008938
SAFETY CIRCUIT PROVEN LIGHT: NEON – WHITE	019-005685
TERMINAL STRIP: 3 POLE	016-004761
MARKER STRIP 1 TO 3	016-004762
TERMINAL STRIP: 12 POLE	016-004224
MARKER STRIP 1 TO 12	016-004225
MARKER STRIP 13 TO 24	016-006386
MARKER STRIP 25 TO 36	016-006387
MARKER STRIP 37 TO 48	016-006388
MARKER STRIP 49 TO 60	016-006389
MARKER STRIP 61 TO 72	016-006390
MARKER STRIP 73 TO 84	016-006391
MARKER STRIP 85 TO 96	016-009189

STARTER COMPONENTS - TELEMECANIQUE

TELEMECANIQUE PART NUMBER / DELUX PART NUMBER

240V 3P

HP	ITEM 1	ITEM 2	AUX. CONT.
1	LUB12	LUCA12FU	LUA1C11
	001-008907	001-008910	001-008928
2	LUB12	LUCA12FU	LUA1C11
	001-008907	001-008910	001-008928
3	LUB12	LUCA12FU	LUA1C11
	001-008907	001-008910	001-008928
5	LUB32	LUCA32FU	LUA1C11
	001-008908	001-008911	001-008928
7.5	LUB32	LUCA32FU	LUA1C11
	001-008908	001-008911	001-008928
10	LUB32	LUCA32FU	LUA1C11
	001-008908	001-008911	001-008928
15	GV3ME63	LC1D50G7	GV3A08
	001-008915	001-008921	001-008930
20	GV3ME63	LC1D65G7	GV3A08
	001-008915	001-008922	001-008930
25	GV7RE80	LC1D80G7	GV7AE11
	001-008916	001-008923	001-008931
30	GV7RE80	LC1D80G7	GV7AE11
	001-008916	001-008923	001-008931
40	GV7RE150	LC1D115G7	GV7AE11
	001-008918	001-008924	001-008931
50	GV7RE150	LC1D150G7	GV7AE11
	001-008918	001-008925	001-008931
60	GV7RE220	LC1D150G7	GV7AE11
	001-008919	001-008925	001-008931

480V 3P

HP	ITEM 1	ITEM 2	AUX. CONT.
1	LUB12	LUCA05FU	LUA1C11
	001-008907	001-008909	001-008928
2	LUB12	LUCA05FU	LUA1C11
	001-008907	001-008909	001-008928
3	LUB12	LUCA12FU	LUA1C11
	001-008907	001-008910	001-008928
5	LUB12	LUCA12FU	LUA1C11
	001-008907	001-008910	001-008928
7.5	LUB12	LUCA12FU	LUA1C11
	001-008907	001-008910	001-008928
10	LUB32	LUCA32FU	LUA1C11
	001-008908	001-008911	001-008928
15	LUB32	LUCA32FU	LUA1C11
	001-008908	001-008911	001-008928
20	LUB32	LUCA32FU	LUA1C11
	001-008908	001-008911	001-008928
25	GV3ME40	LC1D40G7	GV3A08
	001-008914	001-008920	001-008930
30	GV3ME40	LC1D40G7	GV3A08
	001-008914	001-008920	001-008930
40	GV3ME63	LC1D50G7	GV3A08
	001-008915	001-008921	001-008930
50	GV7RE80	LC1D80G7	GV7AE11
	001-008916	001-008923	001-008931
60	GV7RE80	LC1D80G7	GV7AE11
	001-008916	001-008923	001-008931

575V 3P

HP	ITEM 1	ITEM 2	AUX. CONT.
1	LUB12	LUCA05FU	LUA1C11
	001-008907	001-008909	001-008928
2	LUB12	LUCA05FU	LUA1C11
	001-008907	001-008909	001-008928
3	LUB12	LUCA12FU	LUA1C11
	001-008907	001-008910	001-008928
5	LUB12	LUCA12FU	LUA1C11
	001-008907	001-008910	001-008928
7.5	LUB12	LUCA12FU	LUA1C11
	001-008907	001-008910	001-008928
10	LUB12	LUCA12FU	LUA1C11
	001-008907	001-008910	001-008928
15	LUB32	LUCA32FU	LUA1C11
	001-008908	001-008911	001-008928
20	LUB32	LUCA32FU	LUA1C11
	001-008908	001-008911	001-008928
25	LUB32	LUCA32FU	LUA1C11
	001-008908	001-008911	001-008928
30	GV3ME40	LC1D40G7	GV3A08
	001-008914	001-008920	001-008930
40	GV3ME63	LC1D50G7	GV3A08
	001-008915	001-008921	001-008930
50	GV3ME63	LC1D65G7	GV3A08
	001-008915	001-008922	001-008930
60	GV7RE80	LC1D80G7	GV7AE11

380V 3P

HP	ITEM 1	ITEM 2	AUX. CONT.
1	LUB12	LUCA05FU	LUA1C11
	001-008907	001-008909	001-008928
2	LUB12	LUCA05FU	LUA1C11
	001-008907	001-008909	001-008928
3	LUB12	LUCA12FU	LUA1C11
	001-008907	001-008910	001-008928
5	LUB12	LUCA12FU	LUA1C11
	001-008907	001-008910	001-008928
7.5	LUB32	LUCA32FU	LUA1C11
	001-008908	001-008911	001-008928
10	LUB32	LUCA32FU	LUA1C11
	001-008908	001-008911	001-008928
15	LUB32	LUCA32FU	LUA1C11
	001-008908	001-008911	001-008928
20	GV3ME40	LC1D40G7	GV3A08
	001-008914	001-008920	001-008930
25	GV3ME40	LC1D40G7	GV3A08
	001-008914	001-008920	001-008930
30	GV3ME63	LC1D50G7	GV3A08
	001-008915	001-008921	001-008930
40	GV3ME63	LC1D65G7	GV3A08
	001-008915	001-008922	001-008930
50	GV7RE80	LC1D80G7	GV7AE11
	001-008916	001-008923	001-008931
60	GV7RE100	LC1D115G7	GV7AE11

	001-008916	001-008923	001-008931
230V 1P			
HP	**ITEM 1**	**ITEM 2**	**AUX. CONT.**
1	LUB12	LUCC12FU	LUA1C11
	001-008907	001-008912	001-008928
2	LUB12	LUCC12FU	LUA1C11
	001-008907	001-008912	001-008928
3	LUB32	LUCC32FU	LUA1C11
	001-008908	001-008913	001-008928
5	LUB32	LUCC32FU	LUA1C11
	001-008908	001-008913	001-008928
7.5	GV3ME63	LC1D50G7	GV3A08
	001-008915	001-008921	001-008930
10	GV3ME63	LC1D65G7	GV3A08
	001-008915	001-008922	001-008930
15	GV3ME80	LC1D80G7	GV3A08
	001-009052	001-008923	001-008930

	001-008917	001-008924	001-008931
208V 3P			
HP	**ITEM 1**	**ITEM 2**	**AUX. CONT.**
1	LUB12	LUCA12FU	LUA1C11
	001-008907	001-008910	001-008928
2	LUB12	LUCA12FU	LUA1C11
	001-008907	001-008910	001-008928
3	LUB12	LUCA12FU	LUA1C11
	001-008907	001-008910	001-008928
5	LUB32	LUCA32FU	LUA1C11
	001-008908	001-008911	001-008928
7.5	LUB32	LUCA32FU	LUA1C11
	001-008908	001-008911	001-008928
10	LUB32	LUCA32FU	LUA1C11
	001-008908	001-008911	001-008928
15	GV3ME63	LC1D50G7	GV3A08
	001-008915	001-008921	001-008930
20	GV3ME63	LC1D65G7	GV3A08
	001-008915	001-008922	001-008930
25	GV7RE80	LC1D80G7	GV7AE11
	001-008916	001-008923	001-008931
30	GV7RE100	LC1D115G7	GV7AE11
	001-008917	001-008924	001-008931
40	GV7RE150	LC1D150G7	GV7AE11
	001-008918	001-008925	001-008931
50	GV7RE150	LC1D150G7	GV7AE11
	001-008918	001-008925	001-008931
60	N/A	N/A	N/A
	N/A	N/A	N/A

NOTES:

1) **GV7RE80** TO **GV7RE150** STARTERS REQUIRE **2** SETS OF 3 LUGS; **GV7AC021 [001-008926]**. **GV7RE220** STARTERS REQUIRE **2** SETS OF 3 LUGS; **GV7AC022 [001-008927]**.

2) ALL AUXILIARY STARTERS USE AT *LEAST* AN **LUB32** SIZE STARTER BASE, EVEN IF OVERLOAD REQUIREMENTS ARE LESS.

3) USE **(1) LUFN20 [001-008936]** AUX. CONT. ON EACH LOAD MOTOR STARTER.

FAN CONTROL CIRCUIT

FAN SWITCH: TOGGLE - MOM-ON		010-005681
BOOT PROTECTOR: FAN SWITCH		016-004791
FAN SWITCH: TOGGLE - DPST ON/OFF	(MSF ONLY)	010-005475
BOOT PROTECTOR: FAN SWITCH		016-004791
FAN PROVEN LIGHT(S): NEON - CLEAR		019-005684
FAN TIMER(S): (8) PIN - DPDT - 120V - 0 TO 60 SEC.		007-003414
RELAY SOCKET: 8 PIN 120V - FAN TIMER		007-008938
FAN SAIL SENSOR ASS'Y - SENSOR AND SOLID PADDLE ASS'Y		400-007230
FAN SAIL SENSOR ASS'Y - SENSOR AND PERF PADDLE ASS'Y		400-008700
FAN SAIL SENSOR SOLID PADDLE W/ ARM ASS'Y:		400-007229
FAN SAIL SENSOR PERFORATED PADDLE W/ ASS'Y:		400-008699
FAN SAIL SENSOR(S): HONEYWELL - S437A 1009		009-005213
FAN SAIL SENSOR SOLID PADDLE:		100-005291
FAN SAIL SENSOR PERFORATED PADDLE:		100-006857
FAN VACUUM SWITCH: BEC R72-C1-ID-192		009-003435
TUBE AIR SENSOR – COPPER		100-009123
ELBOW 90 DEG 1/4" TO 1/8" – BRASS		021-001137
FAN SENSOR RELAY: SURFACE MOUNT - SPST - 120V - 10 SEC.		007-005315
FAN SENSOR REALY BASE:		007-005315-01
PURGE RELAY: (8)PIN - DPDT - 120V - 60 SEC.		007-009166
RELAY SOCKET: 8 PIN 120V - PURGE		007-008938
PURGING LIGHT: NEON - YELLOW		019-005687
BURNER READY LIGHT: NEON - CLEAR		019-005684
FAN GREENHECK - 38" – ADJUSTABLE PITCH:		038-008298
FAN GREENHECK - 43" – ADJUSTABLE PITCH:		038-008299
SPINNER DOMED - FAN GREENHECK 21” (HUB)		038-008300
SPLIT TAPER BUSHING- QD-E X 1 3/8: 38” FAN - 10HP		056-008704
SPLIT TAPER BUSHING- QD-E X 1 5/8: 38” FAN - 15/20HP		056-008705
SPLIT TAPER BUSHING- QD-E X 1 7/8: 38” FAN - 25/30HP		056-008706
SPLIT TAPER BUSHING- QD-E X 2 1/8: 43" FAN - 40/50HP		056-008707
SPLIT TAPER BUSHING- QD-E X 2 3/8: 43" FAN - 60HP		056-008708

NOTE: FOR MOTORS, FAN PITCH, STARTER SIZES, AND WIRE SIZES REFER TO CHARTS.

FAN MOTORS AND FANS 36" DIA PITCH SETTINGS FOR * *AEROVENT & BEHLEN***

230V-1P ** 240V-3P ** 480V-3P ** 575V-3P

A* = AEROVENT FAN B**** = BEHLEN FAN**

MODEL	DIA FAN	--PITCH--- A*	B*****	MOTOR	VOLTAGE		
MSF-31010-CF	10FT 36"	*	2 1/8"	10 HP	230V-1P		
MSF-31010-AB	10FT 36"	*	2 1/8"	10 HP	230V-1P		
MSF-41515-CF	10FT 36"	26	*	15 HP	230V-1P	240V-3P	480V-3P 575V-3P
MSF-41515-AB	10FT 36"	26	*	15 HP	230V-1P	240V-3P	480V-3P 575V-3P
MSF-62520-CF	15FT 36"	30	*	20 HP		240V-3P	480V-3P 575V-3P
MSF-62520-AB	15FT 36"	30	*	20 HP		240V-3P	480V-3P 575V-3P
MSF-72525-CF	15FT 36"	34	*	25 HP		240V-3P	480V-3P 575V-3P
MSF-72525-AB	15FT 36"	34	*	25 HP		240V-3P	480V-3P 575V-3P
DP 2510	10FT 36"	*	2 1/8"	10 HP	230V-1P		
DP 3015	10FT 36"	26	*	15 HP	230V-1P		
DP 4020	15FT 36"	*	2 1/8"	10 HP	230V-1P		
DP 5020	20FT 36"	*	2 1/8"	10 HP	230V-1P		
DP 7530	30FT 36"	*	2 1/8"	10 HP	230V-1P		
DP 10040	40FT 36"	*	2 1/8"	10 HP	230V-1P		.
DP 3015	10FT 36"	26	*	15 HP		240V-3P	480V-3P 575V-3P
DP 4025	15FT 36"	34	*	25 HP		240V-3P	480V-3P 575V-3P
DP 6030	20FT 36"	26	*	15 HP		240V-3P	480V-3P 575V-3P
DP 7550	25FT 36"	34	*	25 HP		240V-3P	480V-3P 575V-3P
DP 9045	30FT 36"	26	*	15 HP		240V-3P	480V-3P 575V-3P
DP 12060	40FT 36"	26	*	15 HP		240V-3P	480V-3P 575V-3P
DPSL 3520	10FT 36"	31	*	20 HP		240V-3P	480V-3P 575V-3P
DPSL 4530	15FT 36"	38	*	30 HP		240V-3P	480V-3P 575V-3P
DPSL 7040	20FT 36"	31	*	20 HP		240V-3P	480V-3P 575V-3P
DPSL 8560	25FT 36"	38	*	30 HP		240V-3P	480V-3P 575V-3P
DPSL 10560	30FT 36"	31	*	20 HP		240V-3P	480V-3P 575V-3P
DPSL 14080	40FT 36"	31	*	20 HP		240V-3P	480V-3P 575V-3P
DPX 4525	10FT 36"	34	*	25 HP		240V-3P	480V-3P 575V-3P
DPX 7040	15FT 36"	30	*	20 HP		240V-3P	480V-3P 575V-3P
DPX 9050	20FT 36"	34	*	25 HP		240V-3P	480V-3P 575V-3P
DPX N/A	25FT ***	**	*	N/A		N/A	N/A N/A
DPX 13575	30FT 36"	34	*	25 HP		240V-3P	480V-3P 575V-3P
DPX 180100	40FT 36"	34	*	25 HP		240V-3P	480V-3P 575V-3P
DPXSL 5030	10FT 36"	38	*	30 HP		240V-3P	480V-3P 575V-3P
DPXSL 8050	15FT 36"	34	*	25 HP		240V-3P	480V-3P 575V-3P
DPXSL 10060	20FT 36"	38	*	30 HP		240V-3P	480V-3P 575V-3P
DPXSL 12560	25FT 43"	24	*	30 HP		240V-3P	480V-3P 575V-3P
DPXSL 15090	30FT 36"	38	*	30 HP		240V-3P	480V-3P 575V-3P
DPXSL 200120	40FT 36"	38	*	30 HP		240V-3P	480V-3P 575V-3P

FAN MOTORS AND FANS 38" AND 43" DIA PITCH SETTINGS FOR ** *AEROVENT & BEHLEN***

230V-1P ** 208V-3P ** 240V-3P ** 480V-3P ** 575V-3P

A* = AEROVENT FAN B**** = BEHLEN FAN**

MODEL	DIA FAN	--PITCH--- A*	B******	MOTOR	VOLTAGE
MSF-31010-CF	10FT 38"	18	1 15/16"	10 HP	230V-1P
MSF-31010-AB	10FT 38"	18	1 15/16"	10 HP	230V-1P
MSF-41515-CF	10FT 38"	23	*	15 HP	230V-1P 208V-3P 240V-3P 480V-3P 575V-3P
MSF-41515-AB	10FT 38"	23	*	15 HP	230V-1P 208V-3P 240V-3P 480V-3P 575V-3P
MSF-62520-CF	15FT 38"	27	*	20 HP	208V-3P 240V-3P 480V-3P 575V-3P
MSF-62520-AB	15FT 38"	27	*	20 HP	208V-3P 240V-3P 480V-3P 575V-3P
MSF-72525-CF	15FT 38"	31	*	25 HP	208V-3P 240V-3P 480V-3P 575V-3P
MSF-72525-AB	15FT 38"	31	*	25 HP	208V-3P 240V-3P 480V-3P 575V-3P
DP 2510	10FT 38"	18	1 15/16"	10 HP	230V-1P
DP 3015	10FT 38"	23	*	15 HP	230V-1P
DP 4020	15FT 38"	18	1 15/16"	10 HP	230V-1P
DP 5020	20FT 38"	18	1 15/16"	10 HP	230V-1P
DP 7530	30FT 38"	18	1 15/16"	10 HP	230V-1P
DP 10040	40FT 38"	18	1 15/16"	10 HP	230V-1P .
DP 3015	10FT 38"	23	*	15 HP	208V-3P 240V-3P 480V-3P 575V-3P
DP 4025	15FT 38"	31	*	25 HP	208V-3P 240V-3P 480V-3P 575V-3P
DP 6030	20FT 38"	23	*	15 HP	208V-3P 240V-3P 480V-3P 575V-3P
DP 7550	25FT 38"	31	*	25 HP	208V-3P 240V-3P 480V-3P 575V-3P
DP 9045	30FT 38"	23	*	15 HP	208V-3P 240V-3P 480V-3P 575V-3P
DP 12060	40FT 38"	23	*	15 HP	208V-3P 240V-3P 480V-3P 575V-3P
DPSL 3520	10FT 38"	27	*	20 HP	208V-3P 240V-3P 480V-3P 575V-3P
DPSL 4530	15FT 38"	35	*	30 HP	208V-3P 240V-3P 480V-3P 575V-3P
DPSL 7040	20FT 38"	27	*	20 HP	208V-3P 240V-3P 480V-3P 575V-3P
DPSL 8560	25FT 38"	35	*	30 HP	208V-3P 240V-3P 480V-3P 575V-3P
DPSL 10560	30FT 38"	27	*	20 HP	208V-3P 240V-3P 480V-3P 575V-3P
DPSL 14080	40FT 38"	27	*	20 HP	208V-3P 240V-3P 480V-3P 575V-3P

FAN MOTORS AND FANS 38" AND 43″ DIA PITCH SETTINGS FOR ** *AEROVENT & BEHLEN***

230V-1P ** 208V-3P ** 240V-3P ** 480V-3P ** 575V-3P

A* = AEROVENT FAN B**** = BEHLEN FAN**

MODEL		DIA FAN	--PITCH--- A*	B******	MOTOR	VOLTAGE			
DPX	4525	10FT 38"	31	*	25 HP	208V-3P	240V-3P	480V-3P	575V-3P
DPX	7040	15FT 38"	27	*	20 HP	208V-3P	240V-3P	480V-3P	575V-3P
DPX	9050	20FT 38"	31	*	25 HP	208V-3P	240V-3P	480V-3P	575V-3P
DPX	N/A	25FT ***	**	*	N/A	N/A	N/A	N/A	N/A
DPX	13575	30FT 38"	31	*	25 HP	208V-3P	240V-3P	480V-3P	575V-3P
DPX	180100	40FT 38"	31	*	25 HP	208V-3P	240V-3P	480V-3P	575V-3P
DPXSL	5030	10FT 38"	35	*	30 HP	208V-3P	240V-3P	480V-3P	575V-3P
DPXSL	8050	15FT 38"	31	*	25 HP	208V-3P	240V-3P	480V-3P	575V-3P
DPXSL	10060	20FT 38"	35	*	30 HP	208V-3P	240V-3P	480V-3P	575V-3P
DPXSL	12560	25FT 43"	24	*	30 HP	208V-3P	240V-3P	480V-3P	575V-3P
DPXSL	15090	30FT 38"	35	*	30 HP	208V-3P	240V-3P	480V-3P	575V-3P
DPXSL	200120	40FT 38"	35	*	30 HP	208V-3P	240V-3P	480V-3P	575V-3P
DPX4T	5630	10FT 43"	24	*	30 HP	208V-3P	240V-3P	480V-3P	575V-3P
DPX4T	8460	15FT 43"	38	*	60 HP	208V-3P	240V-3P	480V-3P	575V-3P
DPX4T	11260	20FT 43"	24	*	30 HP	208V-3P	240V-3P	480V-3P	575V-3P
DPX4T	140100	25FT 43"	30	*	50 HP	208V-3P	240V-3P	480V-3P	575V-3P
DPX4T	16890	30FT 43"	24	*	30 HP	208V-3P	240V-3P	480V-3P	575V-3P
DPX4T	224120	40FT 43"	24	*	30 HP	208V-3P	240V-3P	480V-3P	575V-3P
DPX8T	6440	10FT 43"	27	*	40 HP	208V-3P	240V-3P	480V-3P	575V-3P
DPX8T	9660	15FT ***	**	*	N/A	N/A	N/A	N/A	N/A
DPX8T	12880	20FT 43"	27	*	40 HP	208V-3P	240V-3P	480V-3P	575V-3P
DPX8T	160120	25FT 43"	38	*	60 HP	208V-3P	240V-3P	480V-3P	575V-3P
DPX8T	192120	30FT 43"	27	*	40 HP	208V-3P	240V-3P	480V-3P	575V-3P
DPX8T	256160	40FT 43"	27	*	40 HP	208V-3P	240V-3P	480V-3P	575V-3P
DPX12T	7250	10FT 43″	30	*	50 HP	208V-3P	240V-3P	480V-3P	575V-3P
DPX12T	10860	15FT 43″	24	*	30 HP	208V-3P	240V-3P	480V-3P	575V-3P
DPX12T	144100	20FT 43"	30	*	50 HP	208V-3P	240V-3P	480V-3P	575V-3P
DPX12T	175120	25FT 43"	38	*	60 HP	208V-3P	240V-3P	480V-3P	575V-3P
DPX12T	216150	30FT 43"	30	*	50 HP	208V-3P	240V-3P	480V-3P	575V-3P
DPX12T	288200	40FT 43"	30	*	50 HP	208V-3P	240V-3P	480V-3P	575V-3P

FAN MOTORS AND FANS 38" AND 43" DIA PITCH SETTINGS FOR ** *AEROVENT & BEHLEN***

380V-3P ** 50Hz ** 1450RPM

A* = AEROVENT FAN B**** = BEHLEN FAN**

MODEL		DIA FAN	--PITCH--- A*	B******	MOTOR	VOLTAGE
MSF-31010-CF	10FT	38"	*	*	10 HP	380V-3P
MSF-31010-AB	10FT	38"	*	*	10 HP	380V-3P
MSF-41515-CF	10FT	38"	34	*	15 HP	380V-3P
MSF-41515-AB	10FT	38"	34	*	15 HP	380V-3P
MSF-62520-CF	15FT	38"	38	*	20 HP	380V-3P
MSF-62520-AB	15FT	38"	38	*	20 HP	380V-3P
MSF-72525-CF	15FT	38"	*	*	25 HP	380V-3P
MSF-72525-AB	15FT	38"	*	*	25 HP	380V-3P
DP 2510	10FT	38"	*	*	10 HP	380V-3P
DP 3015	10FT	38"	34	*	15 HP	380V-3P
DP 4020	15FT	38"	*	*	10 HP	380V-3P
DP 5020	20FT	38"	*	*	10 HP	380V-3P
DP 7530	30FT	38"	*	*	10 HP	380V-3P
DP 10040	40FT	38"	*	*	10 HP	380V-3P
DP 3015	10FT	38"	34	*	15 HP	380V-3P
DP 4025	15FT	38"	*	*	25 HP	380V-3P
DP 6030	20FT	38"	34	*	15 HP	380V-3P
DP 7550	25FT	38"	*	*	25 HP	380V-3P
DP 9045	30FT	38"	34	*	15 HP	380V-3P
DP 12060	40FT	38"	34	*	15 HP	380V-3P
DPSL 3520	10FT	38"	38	*	20 HP	380V-3P
DPSL 4530	15FT	38"	*	*	30 HP	380V-3P
DPSL 7040	20FT	38"	38	*	20 HP	380V-3P
DPSL 8560	25FT	38"	*	*	30 HP	380V-3P
DPSL 10560	30FT	38"	38	*	20 HP	380V-3P
DPSL 14080	40FT	38"	38	*	20 HP	380V-3P

FAN MOTORS AND FANS 38" AND 43″ DIA PITCH SETTINGS FOR ** *AEROVENT & BEHLEN***

380V-3P ** 50Hz ** 1450RPM

A* = AEROVENT FAN B**** = BEHLEN FAN**

MODEL		DIA FAN	--PITCH--- A*	B******	MOTOR	VOLTAGE
DPX	4525	10FT 38"	*	*	25 HP	380V-3P
DPX	7040	15FT 38"	38	*	20 HP	380V-3P
DPX	9050	20FT 38"	*	*	25 HP	380V-3P
DPX	N/A	25FT ***	*	*	N/A	N/A
DPX	13575	30FT 38"	*	*	25 HP	380V-3P
DPX	180100	40FT 38"	*	*	25 HP	380V-3P
DPXSL	5030	10FT 38"	*	*	30 HP	380V-3P
DPXSL	8050	15FT 38"	*	*	25 HP	380V-3P
DPXSL	10060	20FT 38"	*	*	30 HP	380V-3P
DPXSL	12560	25FT 43"	*	*	30 HP	380V-3P
DPXSL	15090	30FT 38"	*	*	30 HP	380V-3P
DPXSL	200120	40FT 38"	*	*	30 HP	380V-3P
DPX4T	5630	10FT 43"	*	*	30 HP	380V-3P
DPX4T	8460	15FT 43"	*	*	60 HP	380V-3P
DPX4T	11260	20FT 43"	*	*	30 HP	380V-3P
DPX4T	140100	25FT 43"	*	*	50 HP	380V-3P
DPX4T	16890	30FT 43"	*	*	30 HP	380V-3P
DPX4T	224120	40FT 43"	*	*	30 HP	380V-3P
DPX8T	6440	10FT 43"	*	*	40 HP	380V-3P
DPX8T	9660	15FT ***	*	*	N/A	N/A
DPX8T	12880	20FT 43"	*	*	40 HP	380V-3P
DPX8T	160120	25FT 43"	*	*	60 HP	380V-3P
DPX8T	192120	30FT 43"	*	*	40 HP	380V-3P
DPX8T	256160	40FT 43"	*	*	40 HP	380V-3P
DPX12T	7250	10FT 43″	*	*	50 HP	380V-3P
DPX12T	10860	15FT 43″	*	*	30 HP	380V-3P
DPX12T	144100	20FT 43"	*	*	50 HP	380V-3P
DPX12T	175120	25FT 43"	*	*	60 HP	380V-3P
DPX12T	216150	30FT 43"	*	*	50 HP	380V-3P
DPX12T	288200	40FT 43"	*	*	50 HP	380V-3P

FAN MOTORS AND FANS 38" AND 43″ DIA PITCH SETTINGS FOR ** *GREENHECK***

230V-1P ** 208V-3P ** 240V-3P ** 480V-3P ** 575V-3P

MODEL	DIA FAN	--PITCH--- SETTING	MOTOR	VOLTAGE
MSF-31010-CF	10FT 38"	?-??/??″	10 HP	230V-1P
MSF-31010-AB	10FT 38"		10 HP	230V-1P
MSF-41515-CF	10FT 38"		15 HP	230V-1P 208V-3P 240V-3P 480V-3P 575V-3P
MSF-41515-AB	10FT 38"		15 HP	230V-1P 208V-3P 240V-3P 480V-3P 575V-3P
MSF-62520-CF	15FT 38"		20 HP	208V-3P 240V-3P 480V-3P 575V-3P
MSF-62520-AB	15FT 38"		20 HP	208V-3P 240V-3P 480V-3P 575V-3P
MSF-72525-CF	15FT 38"		25 HP	208V-3P 240V-3P 480V-3P 575V-3P
MSF-72525-AB	15FT 38"		25 HP	208V-3P 240V-3P 480V-3P 575V-3P
MSF2 5217	10FT 36″ TOP	?-??/??″	10 HP	230V-1P 208V-3P 240V-3P 480V-3P 575V-3P
MSF2 5217	10FT 30″ BOT	?-??/??″	7.5 HP	230V-1P 208V-3P 240V-3P 480V-3P 575V-3P
MSF2 7817	15FT 36″ TOP	?-??/??″	15 HP	230V-1P 208V-3P 240V-3P 480V-3P 575V-3P
MSF2 7825	15FT 30″ BOT	?-??/??″	10 HP	230V-1P 208V-3P 240V-3P 480V-3P 575V-3P
MSF2 10435	20FT 42″ TOP	?-??/??″	20 HP	230V-1P 208V-3P 240V-3P 480V-3P 575V-3P
MSF2 10435	20FT 30″ BOT	?-??/??″	15 HP	230V-1P 208V-3P 240V-3P 480V-3P 575V-3P
MSF2 13050	25FT 42″ TOP	?-??/??″	30 HP	230V-1P 208V-3P 240V-3P 480V-3P 575V-3P
MSF2 13050	25FT 30″ BOT	?-??/??″	20 HP	230V-1P 208V-3P 240V-3P 480V-3P 575V-3P
DP 2510	10FT 38"	?-??/??″	10 HP	230V-1P
DP 3015	10FT 38"		15 HP	230V-1P
DP 4020	15FT 38"		10 HP	230V-1P
DP 5020	20FT 38"		10 HP	230V-1P
DP 7530	30FT 38"		10 HP	230V-1P
DP 10040	40FT 38"		10 HP	230V-1P .
DP 3015	10FT 38"	?-??/??″	15 HP	208V-3P 240V-3P 480V-3P 575V-3P
DP 4025	15FT 38"		25 HP	208V-3P 240V-3P 480V-3P 575V-3P
DP 6030	20FT 38"		15 HP	208V-3P 240V-3P 480V-3P 575V-3P
DP 7550	25FT 38"		25 HP	208V-3P 240V-3P 480V-3P 575V-3P
DP 9045	30FT 38"		15 HP	208V-3P 240V-3P 480V-3P 575V-3P
DP 12060	40FT 38"		15 HP	208V-3P 240V-3P 480V-3P 575V-3P
DPSL 3520	10FT 38"	?-??/??″	20 HP	208V-3P 240V-3P 480V-3P 575V-3P
DPSL 4530	15FT 38"		30 HP	208V-3P 240V-3P 480V-3P 575V-3P
DPSL 7040	20FT 38"		20 HP	208V-3P 240V-3P 480V-3P 575V-3P
DPSL 8560	25FT 38"		30 HP	208V-3P 240V-3P 480V-3P 575V-3P
DPSL 10560	30FT 38"		20 HP	208V-3P 240V-3P 480V-3P 575V-3P
DPSL 14080	40FT 38"		20 HP	208V-3P 240V-3P 480V-3P 575V-3P

FAN MOTORS AND FANS 38" AND 43″ DIA PITCH SETTINGS FOR **** *GREENHECK*

230V-1P ** 208V-3P ** 240V-3P ** 480V-3P ** 575V-3P

MODEL		DIA FAN	--PITCH--- SETTING	MOTOR	VOLTAGE			
DPX	4525	10FT 38"	?-??/??″	25 HP	208V-3P	240V-3P	480V-3P	575V-3P
DPX	7040	15FT 38"		20 HP	208V-3P	240V-3P	480V-3P	575V-3P
DPX	9050	20FT 38"		25 HP	208V-3P	240V-3P	480V-3P	575V-3P
DPX	N/A	25FT ***		N/A	N/A	N/A	N/A	N/A
DPX	13575	30FT 38"		25 HP	208V-3P	240V-3P	480V-3P	575V-3P
DPX	180100	40FT 38"		25 HP	208V-3P	240V-3P	480V-3P	575V-3P
DPXSL	5030	10FT 38"	?-??/??″	30 HP	208V-3P	240V-3P	480V-3P	575V-3P
DPXSL	8050	15FT 38"		25 HP	208V-3P	240V-3P	480V-3P	575V-3P
DPXSL	10060	20FT 38"		30 HP	208V-3P	240V-3P	480V-3P	575V-3P
DPXSL	12560	25FT 43"		30 HP	208V-3P	240V-3P	480V-3P	575V-3P
DPXSL	15090	30FT 38"		30 HP	208V-3P	240V-3P	480V-3P	575V-3P
DPXSL	200120	40FT 38"		30 HP	208V-3P	240V-3P	480V-3P	575V-3P
DPX4T	5630	10FT 43"	?-??/??″	30 HP	208V-3P	240V-3P	480V-3P	575V-3P
DPX4T	8460	15FT 43"		60 HP	208V-3P	240V-3P	480V-3P	575V-3P
DPX4T	11260	20FT 43"		30 HP	208V-3P	240V-3P	480V-3P	575V-3P
DPX4T	140100	25FT 43"		50 HP	208V-3P	240V-3P	480V-3P	575V-3P
DPX4T	16890	30FT 43"		30 HP	208V-3P	240V-3P	480V-3P	575V-3P
DPX4T	224120	40FT 43"		30 HP	208V-3P	240V-3P	480V-3P	575V-3P
DPX8T	6440	10FT 43"	?-??/??″	40 HP	208V-3P	240V-3P	480V-3P	575V-3P
DPX8T	9660	15FT ***		N/A	N/A	N/A	N/A	N/A
DPX8T	12880	20FT 43"		40 HP	208V-3P	240V-3P	480V-3P	575V-3P
DPX8T	160120	25FT 43"		60 HP	208V-3P	240V-3P	480V-3P	575V-3P
DPX8T	192120	30FT 43"		40 HP	208V-3P	240V-3P	480V-3P	575V-3P
DPX8T	256160	40FT 43"		40 HP	208V-3P	240V-3P	480V-3P	575V-3P
DPX12T	7250	10FT 43″	?-??/??″	50 HP	208V-3P	240V-3P	480V-3P	575V-3P
DPX12T	10860	15FT 43″		30 HP	208V-3P	240V-3P	480V-3P	575V-3P
DPX12T	144100	20FT 43"		50 HP	208V-3P	240V-3P	480V-3P	575V-3P
DPX12T	175120	25FT 43"		60 HP	208V-3P	240V-3P	480V-3P	575V-3P
DPX12T	216150	30FT 43"		50 HP	208V-3P	240V-3P	480V-3P	575V-3P
DPX12T	288200	40FT 43"		50 HP	208V-3P	240V-3P	480V-3P	575V-3P

FAN MOTORS AND FANS 38" AND 43″ DIA PITCH SETTINGS FOR ** *GREENHECK***

380V-3P ** 50Hz ** 1450RPM

MODEL	DIA FAN	--PITCH--- SETTING	MOTOR	VOLTAGE
MSF-31010-CF	10FT 38"	?-??/??″	10 HP	380V-3P
MSF-31010-AB	10FT 38"		10 HP	380V-3P
MSF-41515-CF	10FT 38"		15 HP	380V-3P
MSF-41515-AB	10FT 38"		15 HP	380V-3P
MSF-62520-CF	15FT 38"		20 HP	380V-3P
MSF-62520-AB	15FT 38"		20 HP	380V-3P
MSF-72525-CF	15FT 38"		25 HP	380V-3P
MSF-72525-AB	15FT 38"		25 HP	380V-3P .
MSF2 5217	10FT 36″ TOP	?-??/??″	10 HP	380V-3P
MSF2 5217	10FT 30″ BOT	?-??/??″	7.5 HP	380V-3P
MSF2 7817	15FT 36″ TOP	?-??/??″	15 HP	380V-3P
MSF2 7825	15FT 30″ BOT	?-??/??″	10 HP	380V-3P
MSF2 10435	20FT 42″ TOP	?-??/??″	20 HP	380V-3P
MSF2 10435	20FT 30″ BOT	?-??/??″	15 HP	380V-3P
MSF2 13050	25FT 42″ TOP	?-??/??″	30 HP	380V-3P
MSF2 13050	25FT 30″ BOT	?-??/??″	20 HP	380V-3P .
DP 2510	10FT 38	?-??/??″	10 HP	380V-3P
DP 3015	10FT 38"		15 HP	380V-3P
DP 4020	15FT 38"		10 HP	380V-3P
DP 5020	20FT 38"		10 HP	380V-3P
DP 7530	30FT 38"		10 HP	380V-3P
DP 10040	40FT 38"		10 HP	380V-3P .
DP 3015	10FT 38"		15 HP	380V-3P
DP 4025	15FT 38"		25 HP	380V-3P
DP 6030	20FT 38"		15 HP	380V-3P
DP 7550	25FT 38"		25 HP	380V-3P
DP 9045	30FT 38"		15 HP	380V-3P
DP 12060	40FT 38"		15 HP	380V-3P .
DPSL 3520	10FT 38"	?-??/??	20 HP	380V-3P
DPSL 4530	15FT 38"		30 HP	380V-3P
DPSL 7040	20FT 38"		20 HP	380V-3P
DPSL 8560	25FT 38"		30 HP	380V-3P
DPSL 10560	30FT 38"		20 HP	380V-3P
DPSL 14080	40FT 38"		20 HP	380V-3P .

FAN MOTORS AND FANS 38" AND 43″ DIA PITCH SETTINGS FOR **** *GREENHECK*

380V-3P ** 50Hz ** 1450RPM

MODEL		DIA FAN	--PITCH--- SETTING	MOTOR	VOLTAGE
DPX	4525	10FT 38"	?-??/??″	25 HP	380V-3P
DPX	7040	15FT 38"		20 HP	380V-3P
DPX	9050	20FT 38"		25 HP	380V-3P
DPX	N/A	25FT ***		N/A	N/A
DPX	13575	30FT 38"		25 HP	380V-3P
DPX	180100	40FT 38"		25 HP	380V-3P .
DPXSL	5030	10FT 38"	?-??/??″	30 HP	380V-3P
DPXSL	8050	15FT 38"		25 HP	380V-3P
DPXSL	10060	20FT 38"		30 HP	380V-3P
DPXSL	12560	25FT 43"		30 HP	380V-3P
DPXSL	15090	30FT 38"		30 HP	380V-3P
DPXSL	200120	40FT 38"		30 HP	380V-3P .
DPX4T	5630	10FT 43"	?-??/??″	30 HP	380V-3P
DPX4T	8460	15FT 43"		60 HP	380V-3P
DPX4T	11260	20FT 43"		30 HP	380V-3P
DPX4T	140100	25FT 43"		50 HP	380V-3P
DPX4T	16890	30FT 43"		30 HP	380V-3P
DPX4T	224120	40FT 43"		30 HP	380V-3P .
DPX8T	6440	10FT 43"	?-??/??″	40 HP	380V-3P
DPX8T	9660	15FT ***		N/A	N/A
DPX8T	12880	20FT 43"		40 HP	380V-3P
DPX8T	160120	25FT 43"		60 HP	380V-3P
DPX8T	192120	30FT 43"		40 HP	380V-3P
DPX8T	256160	40FT 43"		40 HP	380V-3P .
DPX12T	7250	10FT 43″	?-??/??″	50 HP	380V-3P
DPX12T	10860	15FT 43″		30 HP	380V-3P
DPX12T	144100	20FT 43"		50 HP	380V-3P
DPX12T	175120	25FT 43"		60 HP	380V-3P
DPX12T	216150	30FT 43"		50 HP	380V-3P
DPX12T	288200	40FT 43"		50 HP	380V-3P .

FAN MOTOR PART NUMBER

MOTOR	VOLTAGE	FRAME	SHAFT	PART NUMBER
10HP	230V-1P	215T	1 3/8"	004-004574
10HP	208V/240V/480V-3P	215T		004-002675
10HP	380V-3P	215T		004-007857
10HP	575V-3P	215T		004-007570
15HP	230V-1P	256T	1 5/8"	004-006147
15HP	208V/240V/480V-3P	254T		004-002950
15HP	380V-3P	254T		004-007858
15HP	575V-3P	254T		004-007632
20HP	208V/240V/480V-3P	256T	1 5/8"	004-004872
20HP	380V-3P	256T		004-007859
20HP	575V-3P	256T		004-007556
25HP	208V/240V/480V-3P	284T	1 7/8"	004-000644
25HP	380V-3P	284T		004-007860
25HP	575V-3P	284T		004-007423
30HP	208V/240V/480V-3P	286T	1 7/8"	004-000645
30HP	380V-3P	286T		004-007861
30HP	575V-3P	286T		004-007569
40HP	208V/240V/480V-3P	324T	2 1/8"	004-000646
40HP	380V-3P	324T		004-007862
40HP	575V-3P	324T		004-004393
50HP	208V/240V/480V-3P	326T	2 1/8"	004-000647
50HP	380V-3P	326T		004-007863
50HP	575V-3P	326T		004-007628
60HP	208V/240V/480V-3P	364T	2 3/8"	004-000648
60HP	380V-3P	364T		004-007864
60HP	575V-3P	364T		004-007627

NOTES: 1. ALL MOTORS ARE 1750 RPM AND TEFC (EXCEPT 380V-3P).

2. ALL MOTORS USED FOR 380V-3P (50HZ) OPERATION WILL BE RUN AT 1450 RPM AND TEFC.

BURNER AND IGNITION SYSTEM

BURNER SWITCH: TOGGLE - 4PDT ON/ON		010-005682
BOOT PROTECTOR: BURNER SWITCH		016-004791
BURNER SWITCH: TOGGLE - DPDT ON/ON	(MSF ONLY)	010-005473
BOOT PROTECTOR: BURNER SWITCH		016-004791
IGNITION FIRING LIGHT(S): NEON – YELLOW		019-005687
BURNER PROVEN LIGHT(S): NEON – RED		019-003410
FLAME CONTROL(S): FIREYE – MII (TOTAL ASSEMBLY)		007-001817
CHASSIS MC 120		007-006138
AMPLIFIER MODULE MART 1		007-006140
PROGRAMMER MODULE MP 100		007-006139
WIRING BASE: FLAME CONTROL		007-000741
RESET FLAME CONTROL LIGHT: NEON – RED		019-003410
FLAME SENSOR(S) ROD: AUBURN - FRS-4-6		031-001384
WIRE ASS'Y-FLAME SENSOR - 90"		400-006303
WIRE ASS'Y - GND BURNER - 96"		400-006304
FLAME ROD MOUNTING TAB: USED TO MTG. FLAME ROD FRS-4-6		100-005080
IGNITION TRANSFORMER(S): ALLANSON - 120V		008-000755
IGNITION SPARK PLUG(S): CHAMPION - W95D		031-001955
SPARK PLUG MOUNTING TAB: USED TO MTG. SPARK PLUG W95D		100-003111
WIRE ASS'Y-IGNITION TRANSFORMER TO SPARK PLUG - 96"		400-006302
IGNITION WIRE: (PER FOOT)		031-001366
FLAME RELAY: (8)PIN - DPDT - 120V		007-000725
RELAY SOCKET: 8 PIN 120V - FLAME RELAY		007-008938

BURNER AND IGNITION SYSTEM

BURNER RELAY: (8)PIN - DPDT - 120V	007-000725
RELAY SOCKET: 8 PIN 120V - BURNER	007-008938
BURNER DELAY OFF RELAY: (8)PIN - SPST - 120V	007-009167
RELAY SOCKET:8 PIN 120V - BURNER DELAY OFF	007-008938
BURNER (OCTAGON SHAPE) W/ ROUND TUBING	200-002951
PIPE PLUG 1" –FOR CLEAN-OUT (INCLUDED WITH 200-002951)	026-001289
PIPE STREET-ELL 1" 90 DEGREE	021-001116
ORFICE PIPE 1" X 12"	100-003138
FLAME SENSOR(S) ROD: AUBURN - FRS-4-6	031-001384
IGNITION SPARK PLUG(S): CHAMPION - W95D	031-001955
BURNER PLATE - AIR SHIELD – INSIDE	100-003105
BURNER PLATE - AIR SHIELD – INSIDE W/HOLE	100-003108
BURNER PLATE - AIR SHIELD – OUTSIDE	100-003104
BURNER PLATE - AIR SHIELD – OUTSIDE W/HOLE	100-003514
FLAME ROD MOUNTING TAB: USED TO MTG. FLAME ROD FRS-4-6	100-005080
SPARK PLUG MOUNTING TAB: USED TO MTG. SPARK PLUG W95D	100-003111
BURNER STANDOFF BRACKET 38": USED W/ 38" FANS 4 REQ'D	100-007362
BURNER STANDOFF BRACKET 43": USED W/ 43" FANS 4 REQ'D	100-003341

HARDWARE FOR BURNER STANDOFFS

BOLT-WHIZ 3/8-16UNC X 1" (FOUR –4 PER STANDOFF)	040-001483
NUT -WHIZ 3/8-16UNC X 1" (FOUR –4 PER STANDOFF)	040-001460
BURNER COVER ASS'Y 38": USED W/ 38" & 43" FANS	400-003371

ORIFICE CHART

MODEL	DIA FAN	---NATURAL GAS--- PART NUMBER	DIA	-LIQUID PROPANE-- PART NUMBER	DIA	QTY
MSF-31010-CF	10FT 38"	100-003146	3/8	100-003145	9/32	1
MSF-31010-AB	10FT 38"	100-003146	3/8	100-003145	9/32	1
MSF-41515-CF	10FT 38"	100-003146	3/8	100-003145	9/32	1
MSF-41515-AB	10FT 38"	100-003146	3/8	100-003145	9/32	1
MSF-62520-CF	15FT 38"	100-006961	29/64	100-006953	5/16	1
MSF-62520-AB	15FT 38"	100-006961	29/64	100-006953	5/16	1
MSF-72525-CF	15FT 38"	100-006962	15/32	100-006955	11/32	1
MSF-72525-AB	15FT 38"	100-006962	15/32	100-006955	11/32	1
MSF2 5217 TOP	10FT 36"	100-006953	5/16	100-006961	29/64	1
MSF2 5217 BOT	10FT 30"	100-003145	9/32	100-003146	3/8	1
MSF2 7825 TOP	15FT 36"	100-003146	3/8	100-006963	31/64	1
MSF2 7825 BOT	15FT 30"	100-003145	9/32	100-003146	3/8	1
MSF2 10435 TOP	20FT 42"	100-006957	25/64	100-003808	1/2	1
MSF2 10435 BOT	20FT 30"	100-003146	3/8	100-006962	15/32	1
MSF2 13050 TOP	25FT 42"	100-006958	13/32	100-006964	33/64	1
MSF2 13050 BOT	25FT 30"	100-003146	3/8	100-006963	31/64	1
DP 2510	10FT 38"	100-003146	3/8	100-003145	9/32	1
DP 3015	10FT 38"	100-003146	3/8	100-003145	9/32	1
DP 4020	15FT 38"	100-003146	3/8	100-003145	9/32	2
DP 5020	20FT 38"	100-003146	3/8	100-003145	9/32	2
DP 7530	30FT 38"	100-003146	3/8	100-003145	9/32	3
DP 10040	40FT 38"	100-003146	3/8	100-003145	9/32	4
DP 3015	10FT 38"	100-003146	3/8	100-003145	9/32	1
DP 4025	15FT 38"	100-006962	15/32	100-006955	11/32	1
DP 6030	20FT 38"	100-003146	3/8	100-003145	9/32	2
DP 7550	25FT 38"	100-006962	15/32	100-006955	11/32	2
DP 9045	30FT 38"	100-003146	3/8	100-003145	9/32	3
DP 12060	40FT 38"	100-003146	3/8	100-003145	9/32	4
DPSL 3520	10FT 38"	100-006961	29/64	100-006953	5/16	1
DPSL 4530	15FT 38"	100-006963	31/64	100-006956	23/64	1
DPSL 7040	20FT 38"	100-006961	29/64	100-006953	5/16	2
DPSL 8560	25FT 38"	100-006963	31/64	100-006956	23/64	2
DPSL 10560	30FT 38"	100-006961	29/64	100-006953	5/16	3
DPSL 14080	40FT 38"	100-006961	29/64	100-006953	5/16	4

ORIFICE CHART

MODEL		DIA FAN	---NATURAL GAS--- PART NUMBER	DIA	-LIQUID PROPANE-- PART NUMBER	DIA	QTY
DPX	4525	10FT 38"	100-006962	15/32	100-006955	11/32	1
DPX	7040	15FT 38"	100-006961	29/64	100-006953	5/16	2
DPX	9050	20FT 38"	100-006962	15/32	100-006955	11/32	2
DPX	13575	30FT 38"	100-006962	15/32	100-006955	11/32	3
DPX	180100	40FT 38"	100-006962	15/32	100-006955	11/32	4
DPXSL	5030	10FT 38"	100-006963	31/64	100-006956	23/64	1
DPXSL	8050	15FT 38"	100-006962	15/32	100-006955	11/32	2
DPXSL	10060	20FT 38"	100-006963	31/64	100-006956	23/64	2
DPXSL	12560	25FT 43"	100-006963	31/64	100-006956	23/64	2
DPXSL	15090	30FT 38"	100-006963	31/64	100-006956	23/64	3
DPXSL	200120	40FT 38"	100-006963	31/64	100-006956	23/64	4
DPX4T	5630	10FT 43"	100-006963	31/64	100-003146	3/8	1
DPX4T	8460	15FT 43"	100-006962	15/32	100-006959	27/64	1
DPX4T	11260	20FT 43"	100-006963	31/64	100-003146	3/8	2
DPX4T	140100	25FT 43"	100-006964	33/64	100-006958	13/32	2
DPX4T	16890	30FT 43"	100-006963	31/64	100-003146	3/8	3
DPX4T	224120	40FT 43"	100-006963	31/64	100-003146	3/8	4
DPX8T	6440	10FT 43"	100-003808	1/2	100-006957	25/64	1
DPX8T	9660	15FT 43"	N/A	N/A	N/A	N/A	N/A
DPX8T	12880	20FT 43"	100-003808	1/2	100-006957	25/64	2
DPX8T	160120	25FT 43"	100-003809	5/8	100-003808	1/2	2
DPX8T	192120	30FT 43"	100-003808	1/2	100-006957	25/64	3
DPX8T	256160	40FT 43"	100-003808	1/2	100-006957	25/64	4
DPX12T	7250	10FT 43"	100-006964	33/64	100-006958	13/32	1
DPX12T	10860	15FT 43"	100-006963	31/64	100-003146	3/8	2
DPX12T	144100	20FT 43"	100-006964	33/64	100-006958	13/32	2
DPX12T	175120	25FT 43"	100-003809	5/8	100-003808	1/2	2
DPX12T	216150	30FT 43"	100-006964	33/64	100-006958	13/32	3
DPX12T	288200	40FT 43"	100-006964	33/64	100-006958	13/32	4

NOTE:

1. ORIFICE SIZE: OCCASIONALLY CONDITIONS MAY EXIST THAT REQUIRES ORIFICE SIZE TO BE MODIFIED ON EVERY MODEL.

ORIFICE PART NUMBERS

ORIFICE DIA	PART NUMBER	ORIFICE DIA	PART NUMBER
1/8 (.125)	031-002168	7/16 (.421)	100-006960
1/4 (.250)	100-006950	29/64 (.453)	100-006961
17/64 (.265)	100-006951	15/32 (.468)	100-006962
9/32 (.281)	100-003145	31/64 (.484)	100-006963
19/64 (.296)	100-006952	1/2 (.500)	100-003808
5/16 (.312)	100-006953	33/64 (.515)	100-006964
21/64 (.328)	100-006954	17/32 (.531)	100-006965
11/32 (.343)	100-006955	35/64 (.546)	100-006966
23/64 (.359)	100-006956	9/16 (.562)	100-006967
3/8 (.375)	100-003146	37/64 (.578)	100-006968
25/64 (.390)	100-006957	19/32 (.593)	100-006969
13/32 (.406)	100-006958	39/64 (.609)	100-006970
27/64 (.421)	100-006959	5/8 (.625)	100-003809

WET LOAD SYSTEM (LEVELING AUGER OR DRAG CONVEYOR)

LOAD SWITCH: TOGGLE - SPST - OFF/ON	010-005475
BOOT PROTECTOR: LOAD SWITCH	016-004791
GRAIN LOADING LIGHT: NEON – YELLOW	019-005687
FILL AUGER LEVEL CONTROL: HI-LO SWITCH DELUX	400-004198
FILL AUGER LEVEL CONTROL SWITCH: MICRO - MERCURY	010-003392
LOW GRAIN SHUTDOWN CONTROL: DELUX - ASS'Y –PADDLE MOTOR END	400-009196
LOW GRAIN SHUTDOWN CONTROL: DELUX - ASS'Y –PADDLE FILL END (40’)	400-009197
LOW GRAIN LIGHT(S): NEON – RED	019-003410

LEVELING 8" AND 10" AUGER KITS W/ 1 1/4" SHAFTS (SUPER EDGE FLIGHTING)

INCLUDES: AUGER(S), SHAFTS 1 1/4" W/BOLTS-SPLIT BEARING(S)-END BEARINGS

LEVELING 8" AUGER SET W/1 1/4" SHAFTS 10FT:**(SUPER EDGE FLIGHTING)**	035-006861
LEVELING 8" AUGER SET W/1 1/4" SHAFTS 15FT:**(SUPER EDGE FLIGHTING)**	035-006862
LEVELING 8" AUGER SET W/1 1/4" SHAFTS 20FT:**(SUPER EDGE FLIGHTING)**	035-006863
LEVELING 8" AUGER SET W/1 1/4" SHAFTS 25FT:**(SUPER EDGE FLIGHTING)**	035-006864
LEVELING 8" AUGER SET W/1 1/4" SHAFTS 30FT:**(SUPER EDGE FLIGHTING)**	035-006865
LEVELING 8" AUGER SET W/1 1/4" SHAFTS 40FT:**(SUPER EDGE FLIGHTING)**	035-006866
LEVELING 10" AUGER SET W/1 1/4" SHAFTS 10FT:**(SUPER EDGE FLIGHTING)**	035-007410
LEVELING 10" AUGER SET W/1 1/4" SHAFTS 15FT:**(SUPER EDGE FLIGHTING)**	035-007411
LEVELING 10" AUGER SET W/1 1/4" SHAFTS 20FT:**(SUPER EDGE FLIGHTING)**	035-007412
LEVELING 10" AUGER SET W/1 1/4" SHAFTS 25FT:**(SUPER EDGE FLIGHTING)**	035-007413
LEVELING 10" AUGER SET W/1 1/4" SHAFTS 30FT:**(SUPER EDGE FLIGHTING)**	035-007414
LEVELING 10" AUGER SET W/1 1/4" SHAFTS 40FT:**(SUPER EDGE FLIGHTING)**	035-006867

LEVELING 8" AUGER SECTIONS FOR 1 1/4" SHAFTS (SUPER EDGE FLIGHTING)

INCLUDES: AUGER ONLY - NO 1 1/4" SHAFTS OR BOLTS

LEVELING 8" AUGER SECTION FOR 1 1/4" SHAFTS 10FT: 200-006834
USE ON 10FT DRYERS ONLY **(SUPER EDGE FLIGHTING)**

LEVELING 8" AUGER SECTION FOR 1 1/4" SHAFTS FRONT 10FT 200-006723
MOTOR END **(SUPER EDGE FLIGHTING)**

LEVELING 8" AUGER SECTION FOR 1 1/4" SHAFTS 200-006724
DISCHARGE INTERMEDIATE 10FT: **(SUPER EDGE FLIGHTING)**

LEVELING 8" AUGER SECTION FOR 1 1/4" SHAFTS REAR 5FT: 200-006721
NON MOTOR END **(SUPER EDGE FLIGHTING)**

LEVELING 8" AUGER SECTION FOR 1 1/4" SHAFTS REAR 10FT: 200-006720
NON MOTOR END **(SUPER EDGE FLIGHTING)**

LEVELING 10" AUGER SECTIONS FOR 1 1/4" SHAFTS (SUPER EDGE FLIGHTING)

INCLUDES: AUGER ONLY - NO 1 1/4" SHAFTS OR BOLTS

LEVELING 10" AUGER SECTION FOR 1 1/4" SHAFTS 10FT: 200-007639
USE ON 10FT DRYERS ONLY **(SUPER EDGE FLIGHTING)**

LEVELING 10" AUGER SECTION FOR 1 1/4" SHAFTS FRONT 10FT 200-006794
MOTOR END **(SUPER EDGE FLIGHTING)**

LEVELING 10" AUGER SECTION FOR 1 1/4" SHAFTS 200-006793
INTERMEDIATE 10FT: **(SUPER EDGE FLIGHTING)**

LEVELING 10" AUGER SECTION FOR 1 1/4" SHAFTS REAR 5FT: 200-007640
NON MOTOR END **(SUPER EDGE FLIGHTING)**

LEVELING 10" AUGER SECTION FOR 1 1/4" SHAFTS REAR 10FT: 200-006792
NON MOTOR END **(SUPER EDGE FLIGHTING)**

LEVELING 8" AND 10" AUGER PARTS FOR 1 1/4" SHAFTS

LEVELING AUGER SHAFT 1 1/4" FRONT: KEYED - MOTOR END	100-006727
LEVELING AUGER SHAFT 1 1/4" INTERMEDIATE:	100-006726
LEVELING AUGER SHAFT 1 1/4" REAR: NON-KEYED	100-006728
AUGER SHAFT END BEARING 1 1/4" W/ FLANGE:	044-001510
AUGER SHAFT END BEARING 1 1/4":	044-001512
INTERMEDIATE HANGER ASS'Y- 8" LEVELING AUGER/TROUGH W/HARDWARE W/ 1-1/4" SPLIT BEARING	400-006827
INTERMEDIATE HANGER ASS'Y- 8" LEVELING AUGER/TROUGH W/HARDWARE **W/OUT** 1-1/4" SPLIT BEARING	200-007319
INTERMEDIATE HANGER ASS'Y-10" LEVELING AUGER/TROUGH W/HARDWARE W/ 1-1/4" SPLIT BEARING	400-006829
INTERMEDIATE HANGER ASS'Y-10" LEVELING AUGER/TROUGH W/HARDWARE **W/OUT** 1-1/4" SPLIT BEARING	200-007320
HARDWARE NEEDED WITH EACH HANGER ASS'Y: (2) 042-001495 WASHER 5/16 (2) 040-001436 BOLT-HEX 5/16-18UNC X 1" (2) 040-004068 NUT- LOCK 5/16-18UNC	
AUGER SHAFT INTERMEDIATE BEARING TOP HALF 1 1/4":	044-006714
AUGER SHAFT INTERMEDIATE BEARING BOT HALF 1 1/4":	044-006713
AUGER SHAFT INTERMEDIATE BEARING SADDLE 1 1/4":	044-006715
LEVELING AUGER BELT: B82	049-003364
LEVLEING AUGER BELT: B76	049-007874
LEVELING AUGER SHEAVE SINGLE GROOVE: 1-B18.4-QD	056-005370
LEVELING AUGER SHEAVE DOUBLE GROOVE: 2-B18.4-QD	056-005372
LEVELING AUGER SHEAVE TRIPLE GROOVE: 3-B18.4-QD	056-006832
LEVELING AUGER SHEAVE SINGLE GROOVE: 1-B15.4-QD	056-007871
LEVELING AUGER SHEAVE DOUBLE GROOVE: 2-B15.4-QD	056-007872
LEVELING AUGER SHEAVE TRIPLE GROOVE: 3-B15.4-QD	056-007873
LEVELING AUGER BUSHING: SK-1 1/4" BORE	056-006830
LEVELING MOTOR SHEAVE SINGLE GROOVE: 1-B3.4QD	056-005371
LEVELING MOTOR SHEAVE DOUBLE GROOVE: 2-B3.4QD	056-005373
LEVELING MOTOR SHEAVE TRIPLE GROOVE: 3-B3.4QD	056-006833
BUSHING LEVELING AUGER MOTOR: SH- 7/8" BORE	056-005375
BUSHING LEVELING AUGER MOTOR: SH-1 1/8" BORE	056-005376
BUSHING LEVELING AUGER MOTOR: SH-1 3/8" BORE	056-006344

LEVELING 8" AND 10" AUGER TROUGH SECTIONS (STANDARD FLIGHTING)

INCLUDES: TROUGH ONLY, NO HARDWARE.

LEVELING 8" AUGER TROUGH 5FT:10FT DRYER ONLY	200-007002
LEVELING 8" AUGER TROUGH INTERMEDIATE 10FT:	200-006992
LEVELING 8" AUGER TROUGH REAR 5FT:	200-007002
LEVELING 8" AUGER TROUGH REAR 10FT:	200-006993
LEVELING 10" AUGER TROUGH FRONT 5FT:10FT DRYER ONLY	200-007000
LEVELING 10" AUGER TROUGH INTERMEDIATE 10FT:	200-006999
LEVELING 10" AUGER TROUGH REAR 5FT:	200-007000
LEVELING 10" AUGER TROUGH REAR 10FT:	200-007379
INTERMEDIATE HANGER ASS'Y- 8" LEVELING AUGER/TROUGH W/HARDWARE W/ 1-1/4" SPLIT BEARING	400-006827
INTERMEDIATE HANGER ASS'Y- 8" LEVELING AUGER/TROUGH W/HARDWARE **W/OUT** 1-1/4" SPLIT BEARING	200-007319
INTERMEDIATE HANGER ASS'Y-10" LEVELING AUGER/TROUGH W/HARDWARE W/ 1-1/4" SPLIT BEARING	400-006829
INTERMEDIATE HANGER ASS'Y-10" LEVELING AUGER/TROUGH W/HARDWARE **W/OUT** 1-1/4" SPLIT BEARING	200-007320

HARDWARE NEEDED WITH EACH HANGER ASS'Y: (2) 042-001495 WASHER 5/16
(2) 040-001436 BOLT-HEX 5/16-18UNC X 1" (2) 040-004068 NUT- LOCK 5/16-18UNC

LEVELING DRAG CONVEYOR (OPTIONAL)

DRAG CHAIN: SIZE 8" (OFFSET W/UHMW PADS) (PER FOOT)	054-004506
DRAG CHAIN: CONNECTING LINK FOR 8" CHAIN OFFSET PADS	054-004507
DRAG CHAIN: SPROCKET 8 TOOTH, 1 15/16" BORE (PITCH)	054-004509
DRAG CHAIN: SIZE 8" (STRAIGHT W/UHMW PADS (PER FOOT)	054-006838
DRAG CHAIN: CONNECTING LINK FOR 8" CHAIN STRAIGHT PADS	054-006836
DRAG CHAIN: SPROCKET 9 TOOTH, 1 15/16" BORE (PITCH	054-006837
DRAG CHAIN: ROLLER RETURN ASS'Y FOR 8" CHAIN	054-004508
DRAG SHAFT BEARINGS: FOUR(4) BOLT, 1 15/16" BORE	044-002067
DRAG SHAFT: HEAD - NON MOTOR END	100-004527
DRAG SHAFT: TAIL - MOTOR END	100-004546

LEVELING DRAG CONVEYOR

COUPLING SPROCKET: 60 CHAIN, 18 TOOTH, 1 15/16" BORE DRAG SHAFT - TAIL - MOTOR END	047-001931
COUPLING SPROCKET: 60 CHAIN, 18 TOOTH, 1 3/8" BORE REDUCER SHAFT - TAIL - MOTOR END	047-006144
COUPLING SPROCKET: 60 CHAIN, 18 TOOTH, 1 1/2" BORE REDUCER SHAFT - TAIL - MOTOR END	047-002779
COUPLING SPROCKET: 60 CHAIN, 18 TOOTH, 1 5/8" BORE REDUCER SHAFT - TAIL - MOTOR END	047-001932
COUPLING SPROCKET: 60 CHAIN, 18 TOOTH, 1 3/4" BORE REDUCER SHAFT - TAIL - MOTOR END	047-006145
COUPLING CHAIN: DOUBLE WIDTH: SIZE # 6018	036-001930

WET LOAD SYSTEMS (OPTIONAL)

GRAVITY FLOW GARNER CONTROL SYSTEM W / LOW SWITCH

GRAIN LEVEL CONTROL(S): DELUX - ASS'Y	035-003426
GRAIN LEVEL CONTROL SWITCH: ROTARY BINDICATOR	010-002655
GRAIN LEVEL CONTROL LIGHTS: NEON – WHITE	019-005685

GRAVITY FILL GARNER LEVEL CONTROLS W / LOW TIMER

GRAIN LEVEL CONTROL(S): DELUX - ASS'Y	035-003426
GRAIN LEVEL CONTROL SWITCH: ROTARY BINDICATOR	010-002655
GRAIN LEVEL CONTROL LIGHTS: NEON - WHITE	019-005685
WET LOAD RESET TIMER: CROUZET - 120V	003-005469

SHEAVE PART NUMBERS

230V-1P 240/380/480/575V-3P

SHEAVE	GROOVE	BELT TYPE	PITCH	PART NUMBER
1B 3.4	1	B	3.4	056-005371
2B 3.4	2	B	3.4	056-005373
3B 3.4	3	B	3.4	056-006833
1B15.4	1	B	15.4	056-007871
2B15.4	2	B	15.4	056-007872
3B15.4	3	B	15.4	056-007873
1B18.4	1	B	18.4	056-005370
2B18.4	2	B	18.4	056-005372
3B18.4	3	B	18.4	056-006832

BUSHING PART NUMBERS

230V-1P 240/380/480/575V-3P

BUSHING	TYPE	SIZE	BORE SIZE	PART NUMBER
SH 7/8	QD	SH	7/8	056-005375
SH 1-1/8	QD	SH	1-1/8	056-005376
SH 1-3/8	QD	SH	1-3/8	056-006344
SK 1-1/4	QD	SK	1-1/4	056-006830

BELT PART NUMBERS

230V-1P 240/380/480/575V-3P

BELT	TYPE	PITCH	PART NUMBER
B 76	B	77.8	049-007874
B 82	B	83.8	049-003364

SHEAVES & BUSHINGS
STANDARD LEVELING SYSTEM
(AUGER)
230V-1P 240/480/575V-3P

MODEL	FT	MOTOR		AUGER	
		SHEAVE	BUSHING	SHEAVE	BUSHING
MSF-31010-CF 1P	10	1B3.4	SH 7/8	1B18.4	SK 1-1/4
MSF-31010-AB 1P	10	1B3.4	SH 7/8	1B18.4	SK 1-1/4
MSF-41515-CF 1P	10	1B3.4	SH 7/8	1B18.4	SK 1-1/4
MSF-41515-AB 1P	10	1B3.4	SH 7/8	1B18.4	SK 1-1/4
MSF-62520-CF	15	2B3.4	SH 7/8	2B18.4	SK 1-1/4
MSF-62520-AB	15	2B3.4	SH 7/8	2B18.4	SK 1-1/4
MSF-72525-CF	15	2B3.4	SH 7/8	2B18.4	SK 1-1/4
MSF-72525-AB	15	2B3.4	SH 7/8	2B18.4	SK 1-1/4
DP 2510 1P	10	1B3.4	SH 7/8	1B18.4	SK 1-1/4
DP 3015 1P	10	1B3.4	SH 7/8	1B18.4	SK 1-1/4
DP 4020 1P	15	2B3.4	SH 1-1/8	2B18.4	SK 1-1/4
DP 5020 1P	20	2B3.4	SH 1-1/8	2B18.4	SK 1-1/4
DP 7530 1P	30	2B3.4	SH 1-1/8	2B18.4	SK 1-1/4
DP 10040 1P	40	2B3.4	SH 1-1/8	2B18.4	SK 1-1/4
DP 3015	10	1B3.4	SH 7/8	1B18.4	SK 1-1/4
DP 4025	15	2B3.4	SH 7/8	2B18.4	SK 1-1/4
DP 6030	20	2B3.4	SH 7/8	2B18.4	SK 1-1/4
DP 7550	25	2B3.4	SH 1-1/8	2B18.4	SK 1-1/4
DP 9045	30	2B3.4	SH 1-1/8	2B18.4	SK 1-1/4
DP 12060	40	2B3.4	SH 1-1/8	2B18.4	SK 1-1/4
DPSL 3520	10	1B3.4	SH 7/8	1B18.4	SK 1-1/4
DPSL 4530	15	2B3.4	SH 7/8	2B18.4	SK 1-1/4
DPSL 7040	20	2B3.4	SH 7/8	2B18.4	SK 1-1/4
DPSL 8560	25	2B3.4	SH 1-1/8	2B18.4	SK 1-1/4
DPSL 10560	30	2B3.4	SH 1-1/8	2B18.4	SK 1-1/4
DPSL 14080	40	2B3.4	SH 1-1/8	2B18.4	SK 1-1/4

NOTE: 1. USE BELT P/N: 049-003364 (B82).
2. REFER TO SHEAVE-BUSHING-BELT PAGE FOR PART NUMBERS.

SHEAVES & BUSHINGS
STANDARD LEVELING SYSTEM
(AUGER)
230V-1P 240/480/575V-3P

MODEL	FT	MOTOR		AUGER	
		SHEAVE	BUSHING	SHEAVE	BUSHING
DPX 4525	10	1B3.4	SH 7/8	1B18.4	SK 1-1/4
DPX 7040	15	2B3.4	SH 7/8	2B18.4	SK 1-1/4
DPX 9050	20	2B3.4	SH 7/8	2B18.4	SK 1-1/4
DPX 13575	30	2B3.4	SH 1-1/8	2B18.4	SK 1-1/4
DPX 180100	40	3B3.4	SH 1-3/8	3B18.4	SK 1-1/4
DPXSL 5030	10	1B3.4	SH 7/8	1B18.4	SK 1-1/4
DPXSL 8050	15	2B3.4	SH 7/8	2B18.4	SK 1-1/4
DPXSL 10060	20	2B3.4	SH 7/8	2B18.4	SK 1-1/4
DPXSL 12560	25	2B3.4	SH 1-1/8	2B18.4	SK 1-1/4
DPXSL 15090	30	2B3.4	SH 1-1/8	2B18.4	SK 1-1/4
DPXSL 200120	40	3B3.4	SH 1-3/8	3B18.4	SK 1-1/4
DPX4T 5630	10	2B3.4	SH 7/8	2B18.4	SK 1-1/4
DPX4T 8460	15	2B3.4	SH 7/8	2B18.4	SK 1-1/4
DPX4T 11260	20	2B3.4	SH 7/8	2B18.4	SK 1-1/4
DPX4T 140100	25	2B3.4	SH 1-1/8	2B18.4	SK 1-1/4
DPX4T 16890	30	2B3.4	SH 1-1/8	2B18.4	SK 1-1/4
DPX4T 224120	40	3B3.4	SH 1-3/8	3B18.4	SK 1-1/4
DPX8T 6440	10	2B3.4	SH 7/8	2B18.4	SK 1-1/4
DPX8T 9660	15	2B3.4	SH 7/8	2B18.4	SK 1-1/4
DPX8T 12880	20	2B3.4	SH 7/8	2B18.4	SK 1-1/4
DPX8T 160120	25	2B3.4	SH 1-1/8	2B18.4	SK 1-1/4
DPX8T 192120	30	2B3.4	SH 1-1/8	2B18.4	SK 1-1/4
DPX8T 256160	40	3B3.4	SH 1-3/8	3B18.4	SK 1-1/4
DPX12T 7250	10	2B3.4	SH 7/8	2B18.4	SK 1-1/4
DPX12T 10860	15	2B3.4	SH 7/8	2B18.4	SK 1-1/4
DPX12T 144100	20	2B3.4	SH 7/8	2B18.4	SK 1-1/4
DPX12T 175120	25	2B3.4	SH 1-1/8	2B18.4	SK 1-1/4
DPX12T 216150	30	2B3.4	SH 1-1/8	2B18.4	SK 1-1/4
DPX12T 288200	40	3B3.4	SH 1-3/8	3B18.4	SK 1-1/4

NOTE: 1. USE BELT P/N: 049-003364 (B82).
2. REFER TO SHEAVE-BUSHING-BELT PAGE FOR PART NUMBERS.

SHEAVES & BUSHINGS
STANDARD LEVELING SYSTEM
(AUGER)
380V-3P

MODEL	FT	MOTOR		AUGER	
		SHEAVE	BUSHING	SHEAVE	BUSHING
MSF-41515-CF	10	1B3.4	SH 7/8	1B15.4	SK 1-1/4
MSF-41515-AB	10	1B3.4	SH 7/8	1B15.4	SK 1-1/4
MSF-62520-CF	15	2B3.4	SH 7/8	2B15.4	SK 1-1/4
MSF-62520-AB	15	2B3.4	SH 7/8	2B15.4	SK 1-1/4
MSF-72525-CF	15	2B3.4	SH 7/8	2B15.4	SK 1-1/4
MSF-72525-AB	15	2B3.4	SH 7/8	2B15.4	SK 1-1/4
DP 3015	10	1B3.4	SH 7/8	1B15.4	SK 1-1/4
DP 4025	15	2B3.4	SH 7/8	2B15.4	SK 1-1/4
DP 6030	20	2B3.4	SH 7/8	2B15.4	SK 1-1/4
DP 7550	25	2B3.4	SH 1-1/8	2B15.4	SK 1-1/4
DP 9045	30	2B3.4	SH 1-1/8	2B15.4	SK 1-1/4
DP 12060	40	2B3.4	SH 1-1/8	2B15.4	SK 1-1/4
DPSL 3520	10	1B3.4	SH 7/8	1B15.4	SK 1-1/4
DPSL 4530	15	2B3.4	SH 7/8	2B15.4	SK 1-1/4
DPSL 7040	20	2B3.4	SH 7/8	2B15.4	SK 1-1/4
DPSL 8560	25	2B3.4	SH 1-1/8	2B15.4	SK 1-1/4
DPSL 10560	30	2B3.4	SH 1-1/8	2B15.4	SK 1-1/4
DPSL 14080	40	2B3.4	SH 1-1/8	2B15.4	SK 1-1/4
DPX 4525	10	1B3.4	SH 7/8	1B15.4	SK 1-1/4
DPX 7040	15	2B3.4	SH 7/8	2B15.4	SK 1-1/4
DPX 9050	20	2B3.4	SH 7/8	2B15.4	SK 1-1/4
DPX 13575	30	2B3.4	SH 1-1/8	2B15.4	SK 1-1/4
DPX 180100	40	3B3.4	SH 1-3/8	3B15.4	SK 1-1/4
DPXSL 5030	10	1B3.4	SH 7/8	1B15.4	SK 1-1/4
DPXSL 8050	15	2B3.4	SH 7/8	2B15.4	SK 1-1/4
DPXSL 10060	20	2B3.4	SH 7/8	2B15.4	SK 1-1/4
DPXSL 12560	25	2B3.4	SH 1-1/8	2B15.4	SK 1-1/4
DPXSL 15090	30	2B3.4	SH 1-1/8	2B15.4	SK 1-1/4
DPXSL 200120	40	3B3.4	SH 1-3/8	3B15.4	SK 1-1/4

NOTE: 1. USE BELT P/N: 049-007874 (B76).
2. REFER TO SHEAVE-BUSHING-BELT PAGE FOR PART NUMBERS.

SHEAVES & BUSHINGS

STANDARD LEVELING SYSTEM
(AUGER)
380V-3P

MODEL	FT	MOTOR		AUGER	
		SHEAVE	BUSHING	SHEAVE	BUSHING
DPX4T 5630	10	2B3.4	SH 7/8	2B15.4	SK 1-1/4
DPX4T 8460	15	2B3.4	SH 7/8	2B15.4	SK 1-1/4
DPX4T 11260	20	2B3.4	SH 1-1/8	2B15.4	SK 1-1/4
DPX4T 140100	25	2B3.4	SH 1-1/8	2B15.4	SK 1-1/4
DPX4T 16890	30	2B3.4	SH 1-1/8	2B15.4	SK 1-1/4
DPX4T 224120	40	3B3.4	SH 1-3/8	3B15.4	SK 1-1/4
DPX8T 6440	10	2B3.4	SH 7/8	2B15.4	SK 1-1/4
DPX8T 9660	15	N/A	N/A	2B15.4	N/A
DPX8T 12880	20	2B3.4	SH 1-1/8	2B15.4	SK 1-1/4
DPX8T 160120	25	2B3.4	SH 1-1/8	2B15.4	SK 1-1/4
DPX8T 192120	30	2B3.4	SH 1-1/8	2B15.4	SK 1-1/4
DPX8T 256160	40	3B3.4	SH 1-3/8	3B15.4	SK 1-1/4
DPX12T 7250	10	3B3.4	SH 1-3/8	2B15.4	SK 1-1/4
DPX12T 10860	15	3B3.4	SH 1-3/8	2B15.4	SK 1-1/4
DPX12T 144100	20	3B3.4	SH 1-3/8	2B15.4	SK 1-1/4
DPX12T 175120	25	3B3.4	SH 1-3/8	2B15.4	SK 1-1/4
DPX12T 216150	30	3B3.4	SH 1-3/8	2B15.4	SK 1-1/4
DPX12T 288200	40	3B3.4	SH 1-3/8	3B15.4	SK 1-1/4

NOTE: 1. USE BELT P/N: 049-007874 (B76).
2. REFER TO SHEAVE-BUSHING-BELT PAGE FOR PART NUMBERS.

STANDARD LEVELING (AUGER) SYSTEM

ALL MOTORS – 230V-1P – 240V-3P - 480V-3P

MODEL	FT	TYPE	MOTOR DESCRIPTION	DELUX MOTOR P/N.
MSF 31010-CF 1P	10	AUGER-8″	1HP-1750RPM-60HZ-115/230V-1P-143T- 7/8-CLASS B	004-003236
MSF 31010-AB 1P	10	AUGER-8″	1HP-1750RPM-60HZ-115/230V-1P-143T- 7/8-CLASS B	004-003236
MSF 41515-CF 1P	10	AUGER-8″	1HP-1750RPM-60HZ-115/230V-1P-143T- 7/8-CLASS B	004-003236
MSF 41515-AB 1P	10	AUGER-8″	1HP-1750RPM-60HZ-115/230V-1P-143T- 7/8-CLASS B	004-003236
MSF 41515-CF	10	AUGER-8″	1HP-1750RPM-60HZ-240/480V-3P-143T- 7/8-CLASS B	004-002355
MSF 41515-AB	10	AUGER-8″	1HP-1750RPM-60HZ-240/480V-3P-143T- 7/8-CLASS B	004-002355
MSF 62520-CF	15	AUGER-8″	2HP-1750RPM-60HZ-240/480V-3P-145T- 7/8-CLASS B	004-002673
MSF 62520-AB	15	AUGER-8″	2HP-1750RPM-60HZ-240/480V-3P-145T- 7/8-CLASS B	004-002673
MSF 72525-CF	15	AUGER-8″	2HP-1750RPM-60HZ-240/480V-3P-145T- 7/8-CLASS B	004-002673
MSF 72525-AB	15	AUGER-8″	2HP-1750RPM-60HZ-240/480V-3P-145T- 7/8-CLASS B	004-002673
DP 2510 1P	10	AUGER-8″	1HP-1750RPM-60HZ-115/230V-3P-143T- 7/8-CLASS B	004-003236
DP 3015 1P	10	AUGER-8″	1HP-1750RPM-60HZ-115/230V-3P-143T- 7/8-CLASS B	004-003236
DP 4020 1P	15	AUGER-8″	2HP-1750RPM-60HZ-115/230V-1P-182T-1 1/8-CLASS B	004-007779
DP 5020 1P	20	AUGER-8″	2HP-1750RPM-60HZ-115/230V-1P-182T-1 1/8-CLASS B	004-007779
DP 7530 1P	30	AUGER-8″	3HP-1750RPM-60HZ- 230V-1P-184T-1 1/8-CLASS B	004-005417
DP 10040 1P	40	AUGER-8″	5HP-1750RPM-60HZ- 230V-1P-184T-1 1/8-CLASS B	004-004869
DP 3015	10	AUGER-8″	1HP-1750RPM-60HZ-240/480V-3P-143T- 7/8-CLASS B	004-002355
DP 4025	15	AUGER-8″	2HP-1750RPM-60HZ-240/480V-3P-145T- 7/8-CLASS B	004-002673
DP 6030	20	AUGER-8″	2HP-1750RPM-60HZ-240/480V-3P-145T- 7/8-CLASS B	004-002673
DP 7550	25	AUGER-8″	3HP-1750RPM-60HZ-240/480V-3P-182T-1 1/8-CLASS B	004-002671
DP 9045	30	AUGER-8″	3HP-1750RPM-60HZ-240/480V-3P-182T-1 1/8-CLASS B	004-002671
DP 12060	40	AUGER-8″	5HP-1750RPM-60HZ-240/480V-3P-184T-1 1/8-CLASS B	004-002672
DP-SL 3520	10	AUGER-8″	1HP-1750RPM-60HZ-240/480V-3P-143T- 7/8-CLASS B	004-002355
DP-SL 4530	15	AUGER-8″	2HP-1750RPM-60HZ-240/480V-3P-145T- 7/8-CLASS B	004-002673
DP-SL 7040	20	AUGER-8″	2HP-1750RPM-60HZ-240/480V-3P-145T- 7/8-CLASS B	004-002673
DP-SL 8560	25	AUGER-8″	3HP-1750RPM-60HZ-240/480V-3P-182T-1 1/8-CLASS B	004-002671
DP-SL 10560	30	AUGER-8″	3HP-1750RPM-60HZ-240/480V-3P-182T-1 1/8-CLASS B	004-002671
DP-SL 14080	40	AUGER-8″	5HP-1750RPM-60HZ-240/480V-3P-184T-1 1/8-CLASS B	004-002672

NOTE: 1. ALL MOTORS SHOWN 240V/480V-3P UNLESS STATED (1P) INDICATING 230V-1P.

STANDARD LEVELING (AUGER) SYSTEM

ALL MOTORS – 230V-1P – 240V-3P - 480V-3P

MODEL	FT	TYPE	MOTOR DESCRIPTION	DELUX MOTOR P/N.
DPX 4525	10	AUGER-8″	1HP-1750RPM-60HZ-240/480V-3P-143T- 7/8-CLASS B	004-002355
DPX 7040	15	AUGER-8″	2HP-1750RPM-60HZ-240/480V-3P-145T- 7/8-CLASS B	004-002673
DPX 9050	20	AUGER-8″	2HP-1750RPM-60HZ-240/480V-3P-145T- 7/8-CLASS B	004-002673
DPX 13575	30	AUGER-8″	3HP-1750RPM-60HZ-240/480V-3P-182T-1 1/8-CLASS B	004-002671
DPX 180100	40	AUGER-10″	10HP-1750RPM-60HZ-240/480V-3P-215T-1 3/8-CLASS B	004-002675
DPX-SL 5030	10	AUGER-8″	1HP-1750RPM-60HZ-240/480V-3P-143T- 7/8-CLASS B	004-002355
DPX-SL 8050	15	AUGER-8″	2HP-1750RPM-60HZ-240/480V-3P-145T- 7/8-CLASS B	004-002673
DPX-SL 10060	20	AUGER-8″	2HP-1750RPM-60HZ-240/480V-3P-145T- 7/8-CLASS B	004-002673
DPX-SL 12560	25	AUGER-8″	3HP-1750RPM-60HZ-240/480V-3P-182T-1 1/8-CLASS B	004-002671
DPX-SL 15090	30	AUGER-8″	3HP-1750RPM-60HZ-240/480V-3P-182T-1 1/8-CLASS B	004-002671
DPX-SL 200120	40	AUGER-10″	10HP-1750RPM-60HZ-240/480V-3P-215T-1 3/8-CLASS B	004-002675
DPX4T 5630	10	AUGER-8″	2HP-1750RPM-60HZ-240/480V-3P-145T- 7/8-CLASS B	004-002673
DPX4T 8460	15	AUGER-8″	2HP-1750RPM-60HZ-240/480V-3P-145T- 7/8-CLASS B	004-002673
DPX4T 11260	20	AUGER-8″	3HP-1750RPM-60HZ-240/480V-3P-182T-1 1/8-CLASS B	004-002671
DPX4T 140100	25	AUGER-8″	3HP-1750RPM-60HZ-240/480V-3P-182T-1 1/8-CLASS B	004-002671
DPX4T 16890	30	AUGER-8″	5HP-1750RPM-60HZ-240/480V-3P-184T-1 1/8-CLASS B	004-002672
DPX4T 224120	40	AUGER-10″	10HP-1750RPM-60HZ-240/480V-3P-215T-1 3/8-CLASS B	004-002675
DPX8T 6440	10	AUGER-8″	2HP-1750RPM-60HZ-240/480V-3P-145T- 7/8-CLASS B	004-002673
DPX8T 9660	15	N/A		
DPX8T 12880	20	AUGER-8″	3HP-1750RPM-60HZ-240/480V-3P-182T-1 1/8-CLASS B	004-002671
DPX8T 160120	25	AUGER-8″	5HP-1750RPM-60HZ-240/480V-3P-184T-1 1/8-CLASS B	004-002672
DPX8T 192120	30	AUGER-8″	5HP-1750RPM-60HZ-240/480V-3P-184T-1 1/8-CLASS B	004-002672
DPX8T 256160	40	AUGER-10″	10HP-1750RPM-60HZ-240/480V-3P-215T-1 3/8-CLASS B	004-002675
DPX12T 7250	10	AUGER-10″	2HP-1750RPM-60HZ-240/480V-3P-145T- 7/8-CLASS B	004-002673
DPX12T 10860	15	AUGER-10″	2HP-1750RPM-60HZ-240/480V-3P-145T- 7/8-CLASS B	004-002673
DPX12T 144100	20	AUGER-10″	3HP-1750RPM-60HZ-240/480V-3P-182T-1 1/8-CLASS B	004-002671
DPX12T 175120	25	AUGER-10″	5HP-1750RPM-60HZ-240/480V-3P-184T-1 1/8-CLASS B	004-002672
DPX12T 216150	30	AUGER-10″	5HP-1750RPM-60HZ-240/480V-3P-184T-1 1/8-CLASS B	004-002672
DPX12T 288200	40	AUGER-10″	10HP-1750RPM-60HZ-240/480V-3P-215T-1 3/8-CLASS B	004-002675

NOTE: 1. ALL MOTORS SHOWN 240V/480V-3P UNLESS STATED (1P) INDICATING 230V-1P.

STANDARD LEVELING (AUGER) SYSTEM

ALL MOTORS – 380V-3P

MODEL	FT	TYPE	MOTOR DESCRIPTION	DELUX MOTOR P/N.
MSF 41515-CF	10	AUGER-8″	1HP-1450RPM-50HZ- 380V-3P-143T- 7/8-CLASS B	004-007853
MSF 41515-AB	10	AUGER-8″	1HP-1450RPM-50HZ- 380V-3P-143T- 7/8-CLASS B	004-007853
MSF 62520-CF	15	AUGER-8"	2HP-1450RPM-50HZ- 380V-3P-145T- 7/8-CLASS B	004-007854
MSF 62520-AB	15	AUGER-8″	2HP-1450RPM-50HZ- 380V-3P-145T- 7/8-CLASS B	004-007854
MSF 72525-CF	15	AUGER-8″	2HP-1450RPM-50HZ- 380V-3P-145T- 7/8-CLASS B	004-007854
MSF 72525-AB	15	AUGER-8"	2HP-1450RPM-50HZ- 380V-3P-145T- 7/8-CLASS B	004-007854
DP 3015	10	AUGER-8″	1HP-1450RPM-50HZ- 380V-3P-143T- 7/8-CLASS B	004-007853
DP 4025	15	AUGER-8″	2HP-1450RPM-50HZ- 380V-3P-145T- 7/8-CLASS B	004-007854
DP 6030	20	AUGER-8″	2HP-1450RPM-50HZ- 380V-3P-145T- 7/8-CLASS B	004-007854
DP 7550	25	AUGER-8″	3HP-1450RPM-50HZ- 380V-3P-182T-1 1/8-CLASS B	004-007855
DP 9045	30	AUGER-8″	3HP-1450RPM-50HZ- 380V-3P-182T-1 1/8-CLASS B	004-007855
DP 12060	40	AUGER-8″	5HP-1450RPM-50HZ- 380V-3P-184T-1 1/8-CLASS B	004-007856
DP-SL 3520	10	AUGER-8″	1HP-1450RPM-50HZ- 380V-3P-143T- 7/8-CLASS B	004-007853
DP-SL 4530	15	AUGER-8″	2HP-1450RPM-50HZ- 380V-3P-145T- 7/8-CLASS B	004-007854
DP-SL 7040	20	AUGER-8″	2HP-1450RPM-50HZ- 380V-3P-145T- 7/8-CLASS B	004-007854
DP-SL 8560	25	AUGER-8″	3HP-1450RPM-50HZ- 380V-3P-182T-1 1/8-CLASS B	004-007855
DP-SL 10560	30	AUGER-8″	3HP-1450RPM-50HZ- 380V-3P-182T-1 1/8-CLASS B	004-007855
DP-SL 14080	40	AUGER-8″	5HP-1450RPM-50HZ- 380V-3P-184T-1 1/8-CLASS B	004-007856

NOTE: 1. ALL MOTORS SHOWN 380V-3P.

STANDARD LEVELING (AUGER) SYSTEM

ALL MOTORS – 380V-3P

MODEL	FT	TYPE	MOTOR DESCRIPTION	DELUX MOTOR P/N.
DPX 4525	10	AUGER-8″	1HP-1450RPM-50HZ-380V-3P-143T-7/8-CLASS B	004-007853
DPX 7040	15	AUGER-8″	2HP-1450RPM-50HZ-380V-3P-145T-7/8-CLASS B	004-007854
DPX 9050	20	AUGER-8″	2HP-1450RPM-50HZ-380V-3P-145T-7/8-CLASS B	004-007854
DPX 13575	30	AUGER-8″	3HP-1450RPM-50HZ-380V-3P-182T-1 1/8-CLASS B	004-007855
DPX 180100	40	AUGER-10″	10HP-1450RPM-50HZ-380V-3P-215T-1 3/8-CLASS B	004-007857
DPX-SL 5030	10	AUGER-8″	1HP-1450RPM-50HZ-380V-3P-143T-7/8-CLASS B	004-007853
DPX-SL 8050	15	AUGER-8″	2HP-1450RPM-50HZ-380V-3P-145T-7/8-CLASS B	004-007854
DPX-SL 10060	20	AUGER-8″	2HP-1450RPM-50HZ-380V-3P-145T-7/8-CLASS B	004-007854
DPX-SL 12560	25	AUGER-8″	3HP-1450RPM-50HZ-380V-3P-182T-1 1/8-CLASS B	004-007855
DPX-SL 15090	30	AUGER-8″	3HP-1450RPM-50HZ-380V-3P-182T-1 1/8-CLASS B	004-007855
DPX-SL 200120	40	AUGER-10″	10HP-1450RPM-50HZ-380V-3P-215T-1 3/8-CLASS B	004-007857
DPX4T 5630	10	AUGER-8″	2HP-1450RPM-50HZ-380V-3P-145T-7/8-CLASS B	004-007854
DPX4T 8460	15	AUGER-8″	2HP-1450RPM-50HZ-380V-3P-145T-7/8-CLASS B	004-007854
DPX4T 11260	20	AUGER-8″	3HP-1450RPM-50HZ-380V-3P-182T-1 1/8-CLASS B	004-007855
DPX4T 140100	25	AUGER-8″	3HP-1450RPM-50HZ-380V-3P-182T-1 1/8-CLASS B	004-007855
DPX4T 16890	30	AUGER-8″	5HP-1450RPM-50HZ-380V-3P-184T-1 1/8-CLASS B	004-007856
DPX4T 224120	40	AUGER-10″	10HP-1450RPM-50HZ-380V-3P-215T-1 3/8-CLASS B	004-007857
DPX8T 6440	10	AUGER-8″	2HP-1450RPM-50HZ-380V-3P-145T-7/8-CLASS B	004-007854
DPX8T 9660	15	N/A		
DPX8T 12880	20	AUGER-8″	3HP-1450RPM-50HZ-380V-3P-182T-1 1/8-CLASS B	004-007855
DPX8T 160120	25	AUGER-8″	5HP-1450RPM-50HZ-380V-3P-184T-1 1/8-CLASS B	004-007856
DPX8T 192120	30	AUGER-8″	5HP-1450RPM-50HZ-380V-3P-184T-1 1/8-CLASS B	004-002656
DPX8T 256160	40	AUGER-10″	10HP-1450RPM-50HZ-380V-3P-215T-1 3/8-CLASS B	004-007857
DPX12T 7250	10	AUGER-10″	2HP-1450RPM-50HZ-380V-3P-145T-7/8-CLASS B	004-007854
DPX12T 10860	15	AUGER-10″	2HP-1450RPM-50HZ-380V-3P-145T-7/8-CLASS B	004-007854
DPX12T 144100	20	AUGER-10″	3HP-1450RPM-50HZ-380V-3P-182T-1 1/8-CLASS B	004-007855
DPX12T 175120	25	AUGER-10″	5HP-1450RPM-50HZ-380V-3P-184T-1 1/8-CLASS B	004-007856
DPX12T 216150	30	AUGER-10″	5HP-1450RPM-50HZ-380V-3P-184T-1 1/8-CLASS B	004-007856
DPX12T 288200	40	AUGER-10″	10HP-1450RPM-50HZ-380V-3P-215T-1 3/8-CLASS B	004-007857

NOTE: 1. ALL MOTORS SHOWN 380V-3P.

STANDARD LEVELING (AUGER) SYSTEM

ALL MOTOR - 575V-3P

MODEL		FT	TYPE	MOTOR DESCRIPTION			DELUX MOTOR P/N.
MSF	41515-CF	10	AUGER-8"	1HP-1750RPM-60HZ-	575V-3P-143T-	7/8-CLASS B	004-007630
MSF	41515-AB	10	AUGER-8"	1HP-1750RPM-60HZ-	575V-3P-143T-	7/8-CLASS B	004-007630
MSF	62520-CF	15	AUGER-8"	2HP-1750RPM-60HZ-	575V-3P-145T-	7/8-CLASS B	004-007425
MSF	62520-AB	15	AUGER-8"	2HP-1750RPM-60HZ-	575V-3P 145T-	7/8-CLASS B	004-007425
MSF	72525-CF	15	AUGER-8"	2HP-1750RPM-60HZ-	575V-3P-145T-	7/8-CLASS B	004-007425
MSF	72525-AB	15	AUGER-8"	2HP-1750RPM-60HZ-	575V-3P-145T-	7/8-CLASS B	004-007425
DP	3015	10	AUGER-8"	1HP-1750RPM-60HZ-	575V-3P-143T-	7/8-CLASS B	004-007630
DP	4025	15	AUGER-8"	2HP-1750RPM-60HZ-	575V-3P-145T-	7/8-CLASS B	004-007425
DP	6030	20	AUGER-8"	2HP-1750RPM-60HZ-	575V-3P-145T-	7/8-CLASS B	004-007425
DP	7550	25	AUGER-8"	3HP-1750RPM-60HZ-	575V-3P-182T-1	1/8-CLASS B	004-007615
DP	9045	30	AUGER-8"	3HP-1750RPM-60HZ-	575V-3P-182T-1	1/8-CLASS B	004-007615
DP	12060	40	AUGER-8"	5HP-1750RPM-60HZ-	575V-3P-184T-1	1/8-CLASS B	004-007629
DP-SL	3520	10	AUGER-8"	1HP-1750RPM-60HZ-	575V-3P-143T-	7/8-CLASS B	004-007630
DP-SL	4530	15	AUGER-8"	2HP-1750RPM-60HZ-	575V-3P-145T-	7/8-CLASS B	004-007425
DP-SL	7040	20	AUGER-8"	2HP-1750RPM-60HZ-	575V-3P-145T-	7/8-CLASS B	004-007425
DP-SL	8560	25	AUGER-8"	3HP-1750RPM-60HZ-	575V-3P-182T-1	1/8-CLASS B	004-007615
DP-SL	10560	30	AUGER-8"	3HP-1750RPM-60HZ-	575V-3P-182T-1	1/8-CLASS B	004-007615
DP-SL	14080	40	AUGER-8"	5HP-1750RPM-60HZ-	575V-3P-184T-1	1/8-CLASS B	004-007629

NOTE: 1 ALL MOTORS SHOWN 575V-3P.

STANDARD LEVELING (AUGER) SYSTEM

ALL MOTOR – 575V-3P

MODEL	FT	TYPE	MOTOR DESCRIPTION	DELUX MOTOR P/N.
DPX 4525	10	AUGER-8"	1HP-1750RPM-60HZ- 575V-3P-143T- 7/8-CLASS B	004-007630
DPX 7040	15	AUGER-8"	2HP-1750RPM-60HZ- 575V-3P-145T- 7/8-CLASS B	004-007425
DPX 9050	20	AUGER-8"	2HP-1750RPM-60HZ- 575V-3P-145T- 7/8-CLASS B	004-007425
DPX 13575	30	AUGER-8"	3HP-1750RPM-60HZ- 575V-3P-182T-1 1/8-CLASS B	004-007615
DPX 180100	40	AUGER-10"	10HP-1750RPM-60HZ- 575V-3P-215T-1 3/8-CLASS B	004-007570
DPX-SL 5030	10	AUGER-8"	1HP-1750RPM-60HZ- 575V-3P-143T- 7/8-CLASS B	004-007630
DPX-SL 8050	15	AUGER-8"	2HP-1750RPM-60HZ- 575V-3P-145T- 7/8-CLASS B	004-007425
DPX-SL 10060	20	AUGER-8"	2HP-1750RPM-60HZ- 575V-3P-145T- 7/8-CLASS B	004-007425
DPX-SL 12560	25	AUGER-8"	3HP-1750RPM-60HZ- 575V-3P-182T-1 1/8-CLASS B	004-007615
DPX-SL 15090	30	AUGER-8"	3HP-1750RPM-60HZ- 575V-3P-182T-1 1/8-CLASS B	004-007615
DPX-SL 200120	40	AUGER-8"	10HP-1750RPM-60HZ- 575V-3P-215T-1 3/8-CLASS B	004-007570
DPX4T 5630	10	AUGER-8"	2HP-1750RPM-60HZ- 575V-3P-145T- 7/8-CLASS B	004-007425
DPX4T 8460	15	AUGER-8"	2HP-1750RPM-60HZ- 575V-3P-145T- 7/8-CLASS B	004-007425
DPX4T 11260	20	AUGER-8"	3HP-1750RPM-60HZ- 575V-3P-182T-1 1/8-CLASS B	004-007615
DPX4T 140100	25	AUGER-8"	3HP-1750RPM-60HZ- 575V-3P-182T-1 1/8-CLASS B	004-007615
DPX4T 16890	30	AUGER-8"	5HP-1750RPM-60HZ- 575V-3P-184T-1 1/8-CLASS B	004-007629
DPX4T 224120	40	AUGER-10"	10HP-1750RPM-60HZ- 575V-3P-215T-1 3/8-CLASS B	004-007570
DPX8T 6440	10	AUGER-8"	2HP-1750RPM-60HZ- 575V-3P-145T- 7/8-CLASS B	004-007425
DPX8T 9660	15	N/A		
DPX8T 12880	20	AUGER-8"	3HP-1750RPM-60HZ- 575V-3P-182T-1 1/8-CLASS B	004-007615
DPX8T 160120	25	AUGER-8"	5HP-1750RPM-60HZ- 575V-3P-184T-1 1/8-CLASS B	004-007629
DPX8T 192120	30	AUGER-8"	5HP-1750RPM-60HZ- 575V-3P-184T-1 1/8-CLASS B	004-007629
DPX8T 256160	40	AUGER-10"	10HP-1750RPM-60HZ- 575V-3P-215T-1 3/8-CLASS B	004-007570
DPX12T 7250	10	AUGER-10"	2HP-1750RPM-60HZ- 575V-3P-145T- 7/8-CLASS B	004-007425
DPX12T 10860	15	AUGER-10"	2HP-1750RPM-60HZ- 575V-3P-145T- 7/8-CLASS B	004-007425
DPX12T 144100	20	AUGER-10"	3HP-1750RPM-60HZ- 575V-3P-182T-1 1/8-CLASS B	004-007615
DPX12T 175120	25	AUGER-10"	5HP-1750RPM-60HZ- 575V-3P-184T-1 1/8-CLASS B	004-007629
DPX12T 216150	30	AUGER-10"	5HP-1750RPM-60HZ- 575V-3P-184T-1 1/8-CLASS B	004-007629
DPX12T 288200	40	AUGER-10"	10HP-1750RPM-60HZ- 575V-3P-215T-1 3/8-CLASS B	004-007570

NOTE: 1 ALL MOTORS SHOWN 575V-3P.

METERING ROLLS

MOTOR: 1 HP DC - 1750 RPM - 56C FR - 5/8" SH		004-001985
BRUSH KIT: 1HP DC BALDOR		004-006859
NOTE: CONTACT MOTOR MANUFACTURER FOR MOTOR WARRANTY OR SERVICE.		
GEAR REDUCER: 1 HP DC 60:1 RATIO - 1" SH - 56C FR		052-003962
SPROCKET METERING ROLLS: 40 CHAIN - 32 TOOTH – 1" BORE		200-003035
IDLER SPROCKET: 40 CHAIN - 17 TOOTH – 1/2" BORE		047-002982
ROLLER CHAIN: SIZE # 40 (PER FOOT)		046-001548
ROLLER CHAIN: CONNECTING LINK # 40		046-001552
ROLLER CHAIN: OFFSET LINK # 40		046-001556
FEEDROLLS: TWO REQ'D PER FIVE(5) FOOT COLUMN	(P/N = ONE)	100-000099
BOLT –HEX 1/4-20UNC X 2″ (4 PER FIVE(5) FOOT COLUMN)		040-002178
NUT –HEX 1/4-20UNC (4 PER FIVE(5) FOOT COLUMN)		040-001455
WASHER –LOCK 1/4 (4 PER FIVE(5) FOOT COLUMN)		042-001498
FEEDROLL SHAFT 1" DIA – FRONT (KEYED)		100-000098
FEEDROLL SHAFT 1" DIA – INTERMEDIATE		100-000097
FEEDROLL SHAFT 1" DIA – REAR (NOT KEYED)		100-007990
FEEDROLL SHAFT BEARINGS: INSERT 1" W/O LOCK		044-001514
FEEDROLL SHAFT BEARINGS: 1″ SPLIT-WOOD	PR.	044-009102
BEARING HOLDERS: FLANGETTE TWO REQ'D PER BEARING	EA.	044-001957
BOLT CARRIAGE 5/16-18UNC X 3/4" (3 PER BEARING)		040-005439
NUT –WHIZ 5/16-18UNC (3 PER BEARING)		040-001459
FEEDROLL SHELF PLATE (GALV)		100-002522

FEEDROLL MONITOR CONTROL

FEEDROLL MONITOR COMPLETE ASS'Y (10FT ONLY)	400-009202
FEEDROLL MONITOR COMPLETE ASS'Y	400-009195
FEEDROLL MONITOR PANEL SWITCH: TOGGLE - SPST - OFF/ON	010-005475
BOOT PROTECTOR: FEEDROLL MONITOR PANEL SWITCH	016-004791
FEEDROLL MONITOR LIGHT: NEON - WHITE	019-005685
FEEDROLL TIME DELAY RELAY: (8)PIN DPDT - 120V - 15 SEC.	007-005316
RELAY SOCKET: (8) PIN 120V - FEEDROLL MONITOR TIME DELAY	007-000730
FEEDROLL MONITOR SENSOR SWITCH: SWITCH – ROLLER	010-005767
FEED ROLL MONITOR CAM: DELUX	200-006019

DRY UNLOAD SYSTEM (DISCHARGE 8" AUGER OR DRAG CONVEYOR)

UNLOAD SWITCH: TOGGLE - SPST - OFF/ON	010-005475
BOOT PROTECTOR: UNLOAD SWITCH	016-004791
GRAIN UNLOADING LIGHT: NEON - CLEAR	019-005684

DISCHARGE 8" AUGER KITS W/ 1 1/4" SHAFTS (SUPER EDGE FLIGHTING)

INCLUDES: AUGER(S), SHAFTS 1 1/4" W/BOLTS-SPLIT & END BEARING(S)

(NO DISCHARGE EXTENSION AUGER)

YOU MUST ORDER AUGER EXTENSIONS SEPERATE

DISCHARGE 8" AUGER SET W/1 1/4" SHAFTS 10FT:	**(SUPER EDGE FLIGHTING)**	035-006869
DISCHARGE 8" AUGER SET W/1 1/4" SHAFTS 15FT:	**(SUPER EDGE FLIGHTING)**	035-006870
DISCHARGE 8" AUGER SET W/1 1/4" SHAFTS 20FT:	**(SUPER EDGE FLIGHTING)**	035-006871
DISCHARGE 8" AUGER SET W/1 1/4" SHAFTS 25FT:	**(SUPER EDGE FLIGHTING)**	035-006872
DISCHARGE 8" AUGER SET W/1 1/4" SHAFTS 30FT:	**(SUPER EDGE FLIGHTING)**	035-006873
DISCHARGE 8" AUGER SET W/1 1/4" SHAFTS 40FT:	**(SUPER EDGE FLIGHTING)**	035-006874

DISCHARGE AUGERS EXTENSION W/ 1 1/4" SHAFTS (SUPER EDGE FLIGHTING)

INCLUDES: AUGER ONLY NO SHAFTS OR HARDWARE

YOU MUST ORDER AUGER TROUGHS, TOPS AND HANGER BRACKETS SEPERATE

DISCHARGE 8″ AUGER EXT FOR/1 1/4″ SHAFTS	**(SUPER EDGE FLIGHT)**	1′	200-006875
DISCHARGE 8″ AUGER EXT FOR/1 1/4″ SHAFTS	**(SUPER EDGE FLIGHT)**	1′6″	200-006876
DISCHARGE 8″ AUGER EXT FOR/1 1/4″ SHAFTS	**(SUPER EDGE FLIGHT)**	2′	200-006877
DISCHARGE 8″ AUGER EXT FOR/1 1/4″ SHAFTS	**(SUPER EDGE FLIGHT)**	2′6″	200-00XXXX
DISCHARGE 8″ AUGER EXT FOR/1 1/4″ SHAFTS	**(SUPER EDGE FLIGHT)**	3′	200-006878
DISCHARGE 8″ AUGER EXT FOR/1 1/4″ SHAFTS	**(SUPER EDGE FLIGHT)**	4′	200-006879
DISCHARGE 8″ AUGER EXT FOR/1 1/4″ SHAFTS	**(SUPER EDGE FLIGHT)**	5′	200-006880
DISCHARGE 8″ AUGER EXT FOR/1 1/4″ SHAFTS	**(SUPER EDGE FLIGHT)**	6′	200-006881
DISCHARGE 8″ AUGER EXT FOR/1 1/4″ SHAFTS	**(SUPER EDGE FLIGHT)**	7′	200-006882
DISCHARGE 8″ AUGER EXT FOR/1 1/4″ SHAFTS	**(SUPER EDGE FLIGHT)**	8′	200-006883

DISCHARGE 8" AUGER SECTIONS FOR 1 1/4" SHAFTS (SUPER EDGE FLIGHTING)

INCLUDES: AUGER ONLY NO SHAFTS OR BOLTS

DISCHARGE 8" AUGER SECTION FOR 1 1/4" SHAFTS 5FT:	200-006725
DISCHARGE 8" AUGER SECTION FOR 1 1/4" SHAFTS 10FT:	200-006724

LEVELING

DISCHARGE 8" AUGER PARTS FOR 1 1/4" SHAFTS

DISCHARGE AUGER SHAFT 1 1/4" FRONT: KEYED - MOTOR END:	100-006727
DISCHARGE AUGER SHAFT 1 1/4" INTERMEDIATE:	100-006726
DISCHARGE AUGER SHAFT 1 1/4" REAR: NON-KEYED	100-006728
AUGER SHAFT END BEARING 1 1/4" W/ FLANGE:	044-001510
AUGER SHAFT END BEARING 1 1/4":	044-001512
HANGER ASS′Y – DISCHARGE 8″ AUGER FOR 1 1/4" SHAFTS INTERMEDIATE & REAR **WITH** SPLIT BEARING:	400-006852
HANGER ASS'Y - DISCHARGE 8" AUGER FOR 1 1/4" SHAFTS INTERMEDIATE & REAR **W/OUT** SPLIT BEARING:	200-007322
AUGER SHAFT INTERMEDIATE BEARING TOP HALF 1 1/4":	044-006714
AUGER SHAFT INTERMEDIATE BEARING BOT HALF 1 1/4":	044-006713
AUGER SHAFT INTERMEDIATE BEARING SADDLE F 1 1/4":	044-006715
ROLLER CHAIN: SIZE # 40 (PER FOOT)	046-001548
ROLLER CHAIN: CONNECTING LINK # 40	046-001552
ROLLER CHAIN: OFFSET LINK # 40	046-001556

DISCHARGE 8" AUGER EXTENSION TROUGHS

INCLUDES: ONLY THE TROUGH - NO TOP/AUGERS OR HARDWARE

YOU MUST ORDER AUGER TROUGH (TOP) EXTENSIONS SEPERATE

DISCHARGE	8" AUGER TROUGH EXTENSION: 1′	200-005396
DISCHARGE	8" AUGER TROUGH EXTENSION: 1′ 6″ (18″)	200-005848
DISCHARGE	8" AUGER TROUGH EXTENSION: 2′	200-005413
DISCHARGE	8" AUGER TROUGH EXTENSION: 2′ 6″ (30″)	200-00XXXX
DISCHARGE	8" AUGER TROUGH EXTENSION: 3′	200-005408
DISCHARGE	8" AUGER TROUGH EXTENSION: 4	200-005414
DISCHARGE	8" AUGER TROUGH EXTENSION: 5′	200-005854
DISCHARGE	8" AUGER TROUGH EXTENSION: 6′	200-005861
DISCHARGE	8" AUGER TROUGH EXTENSION: 7′	200-005867
DISCHARGE	8" AUGER TROUGH EXTENSION: 8′	200-005873

DISCHARGE 8" AUGER EXTENSION TOPS

INCLUDES: ONLY THE TOP - NO TROUGH/AUGER OR HARDWARE

YOU MUST ORDER AUGER TROUGH EXTENSIONS SEPERATE

DISCHARGE	8" AUGER TROUGH TOP: 1′	100-005399
DISCHARGE	8" AUGER TROUGH TOP: 1′ 6″ (18″)	100-005850
DISCHARGE	8" AUGER TROUGH TOP: 2′	100-005409
DISCHARGE	8" AUGER TROUGH TOP: 2′ 6″ (30″)	100-00XXXX
DISCHARGE	8" AUGER TROUGH TOP: 3′	100-005406
DISCHARGE	8" AUGER TROUGH TOP: 4	100-005410
DISCHARGE	8" AUGER TROUGH TOP: 5′	100-005856
DISCHARGE	8" AUGER TROUGH TOP: 6′	100-005863
DISCHARGE	8" AUGER TROUGH TOP: 7′	100-005869
DISCHARGE	8" AUGER TROUGH TOP: 8′	100-005875

DISCHARGE 8" AUGER TROUGH SECTIONS W/ SLIDE GATES

INCLUDES: ONLY THE TROUGH W/ SLIDE GATES, NO HARDWARE

DISCHARGE	8" AUGER TROUGH SECTION 5FT FOR ALL DRYERS:	400-005496
DISCHARGE	8" AUGER TROUGH SECTION 10FT FOR ALL DRYERS:	400-005495

DISCHARGE 8" AUGER TROUGH SECTIONS W/OUT SLIDE GATES

INCLUDES: ONLY THE TROUGH NO SLIDE GATES, NO HARDWARE

DISCHARGE	8" AUGER TROUGH SECTION 5FT FOR ALL DRYERS:	200-005499
DISCHARGE	8" AUGER TROUGH SECTION 10FT FOR ALL DRYERS:	200-005498

DISCHARGE 8″ AUGER TROUGH PARTS

SLIDE GATE: DISCHARGE 8″ AUGER TROUGH:	100-005503
SLIDE GATE RAIL: DISCHARGE 8″ AUGER TROUGH (TWO REQ′D)	100-005502
AUGER TROUGH DOOR ASS′Y:	400-007643
AUGER TROUGH COVER ANGLE:	100-005912

NOTE: P/N 040-001449 TCS 1/4″ X 1/2″ USED TO MTG. AUGER TROUGH COVER ANGLE TO AUGER DOOR (QT′Y. PER DOOR 6).

DISCHARGE OVERFLOW MONITOR

DISCHARGE OVERFLOW SWITCH: SELECTASWITCH W/COIL FEELER	010-006716
PADDLE – DISCHARGE OVERFLOW SWITCH (COIL FEELER)	100-008308
BRACKET - DISCHARGE OVERFLOW SWITCH (COIL FEELER)	100-003374
DISCHARGE OVERFLOW SWITCH:	010-006716

DISCHARGE DRAG CONVEYOR (OPTIONAL)

DRAG CHAIN: SIZE 8" 2-5/8" PITCH (**STRAIGHT** W/UHMW PADDLES-PER FT)	054-006838
DRAG CHAIN: CONNECTING LINK FOR 8" CHAIN STRAIGHT PADS	054-006836
DRAG CHAIN: SPROCKET 9 TOOTH, 1 15/16" BORE (PITCH)	054-006837
UHMW PADDLE REPLACEMENT 2-5/8" PITCH **STRAIGHT PADDLES**	054-008743
DRAG CHAIN: ROLLER RETURN ASS'Y FOR 8" CHAIN	054-004508
DRAG SHAFT BEARINGS: FOUR(4) BOLT, 1 15/16" BORE	044-002067
DRAG SHAFT: HEAD – NON MOTOR END	100-004527
DRAG SHAFT: TAIL - MOTOR END	100-004546

DISCHARGE DRAG CONVEYOR

COUPLING SPROCKET: 60 CHAIN, 18 TOOTH, 1 15/16" BORE DRAG SHAFT – TAIL – MOTOR END	047-001931
COUPLING SPROCKET: 60 CHAIN, 18 TOOTH, 1 3/8" BORE REDUCER – TAIL – MOTOR	047-006144
COUPLING SPROCKET: 60 CHAIN, 18 TOOTH, 1 1/2" BORE REDUCER – TAIL – MOTOR	047-002779
COUPLING SPROCKET: 60 CHAIN, 18 TOOTH, 1 5/8" BORE REDUCER – TAIL – MOTOR	047-001932
COUPLING SPROCKET: 60 CHAIN, 18 TOOTH, 1 3/4" BORE REDUCER – TAIL – MOTOR	047-006145
COUPLING SPROCKET: 60 CHAIN, 18 TOOTH, 1 1/8" BORE REDUCER – TAIL – MOTOR	047-008281
COUPLING SPROCKET: 60 CHAIN, 18 TOOTH, 1 1/4" BORE REDUCER – TAIL – MOTOR	047-008282
COUPLING CHAIN: DOUBLE WIDTH: SIZE # 6018	036-001930

NOTE: FOR MOTORS, GEAR REDUCERS, STARTER SIZES, HEATER ELEMENTS, FUSE BLOCKS, FUSES, AND WIRE SIZES REFER TO THE CHARTS.

DISCHARGE DRAG CONVEYOR

BOTTOM COVER – INT. 5FT SECTION - 8" DRAG CONVEYOR	100-004531
BOTTOM COVER – SHORT HEAD SECTION - 8" DRAG CONVEYOR	100-004520
BOTTOM COVER – LONG HEAD SECTION - 8" DRAG CONVEYOR	100-004521
BOTTOM COVER – TAIL 48" SECTION - 8" DRAG CONVEYOR	100-004562

SPROCKET CHART FOR 1 1/4″ AUGER SHAFTS

230V-1P – 240V-3P – 480V-3P - 575V-3P

MODEL	FT	METERING ROLLS	DC GEAR REDUCER	AUGER REDUCER	AUGER SHAFT
MSF 31010-CF 1P	10	4016-1	4012-1	4016-1	4016-1-1 1/4
MSF 31010-AB 1P	10	4016-1	4012-1	4016-1	4016-1-1 1/4
MSF 41515-CF 1P	10	4016-1	4012-1	4016-1	4016-1-1 1/4
MSF 41515-AB 1P	10	4016-1	4012-1	4016-1	4016-1-1 1/4
MSF 62520-CF	15	4016-1	4012-1	4016-1	4016-1-1 1/4
MSF 62520-AB	15	4016-1	4012-1	4016-1	4016-1-1 1/4
MSF 72525-CF	15	4016-1	4012-1	4016-1	4016-1-1 1/4
MSF 72525-AB	15	4016-1	4012-1	4016-1	4016-1-1 1/4
DP 2510 1P	10	4032-1	4012-1 & 4060-1	NONE	4015-1-1 1/4
DP 3015 1P	10	4032-1	4012-1 & 4060-1	NONE	4015-1-1 1/4
DP 4020 1P	15	4032-1	4012-1	4016-1	4024-1-1 1/4
DP 5020 1P	20	4032-1	4012-1	4016-1	4024-1-1 1/4
DP 7530 1P	30	4032-1	4012-1	4016-1	4016-1-1 1/4
DP 10040 1P	40	4032-1	4012-1	4024-1-1 1/4	4024-1-1 1/4
DP 3015	10	4032-1	4012-1 & 4060-1	NONE	4015-1-1 1/4
DP 4025	15	4032-1	4012-1	4016-1	4024-1-1 1/4
DP 6030	20	4032-1	4012-1	4016-1	4024-1-1 1/4
DP 7550	25	4032-1	4012-1	4016-1	4016-1-1 1/4
DP 9045	30	4032-1	4012-1	4016-1	4016-1-1 1/4
DP 12060	40	4032-1	4012-1	4024-1-1 1/4	4024-1-1 1/4
DPSL 3520	10	4032-1	4012-1 & 4060-1	NONE	4015-1-1 1/4
DPSL 4530	15	4032-1	4012-1	4016-1	4024-1-1 1/4
DPSL 7040	20	4032-1	4012-1	4016-1	4024-1-1 1/4
DPSL 8560	25	4032-1	4012-1	4016-1	4016-1-1 1/4
DPSL 10560	30	4032-1	4012-1	4016-1	4016-1-1 1/4
DPSL 14080	40	4032-1	4012-1	4024-1-1 1/4	4024-1-1 1/4

NOTE: 1.THE METERING IDLER SPROCKET 4017-1/2 IS THE SAME FOR ALL DRYERS.

2.REFER TO SPROCKET PAGE FOR PART NUMBERS.

SPROCKET CHART FOR 1 1/4" AUGER SHAFTS

230V-1P – 240V-3P – 480V-3P - 575V-3P

MODEL	FT	METERING ROLLS	DC GEAR REDUCER	AUGER REDUCER	AUGER SHAFT
DPX 4525	10	4032-1	4016-1	4016-1	4024-1-1 1/4
DPX 7040	15	4032-1	4016-1	4016-1	4024-1-1 1/4
DPX 9050	20	4032-1	4016-1	4016-1	4016-1-1 1/4
DPX 13575	30	4032-1	4016-1	4024-1 1/4	4024-1-1 1/4
DPX 180100	40	4032-1	4016-1	REFER TO DRAG CONVEYOR PARTS	
DPXSL 5030	10	4032-1	4016-1	4016-1	4024-1-1 1/4
DPXSL 8050	15	4032-1	4016-1	4016-1	4024-1-1 1/4
DPXSL 10060	20	4032-1	4016-1	4016-1	4016-1-1 1/4
DPXSL 12560	25	4032-1	4016-1	4024-1 1/4	4024-1-1 1/4
DPXSL 15090	30	4032-1	4016-1	4024-1 1/4	4024-1-1 1/4
DPXSL 200120	40	4032-1	4016-1	REFER TO DRAG CONVEYOR PARTS	
DPX4T 5630	10	4032-1	4024-1	4016-1	4024-1-1 1/4
DPX4T 8460	15	4032-1	4024-1	4016-1	4016-1-1 1/4
DPX4T 11260	20	4032-1	4024-1	4016-1	4016-1-1 1/4
DPX4T 140100	25	4032-1	4024-1	4024-1 1/4	4024-1-1 1/4
DPX4T 16890	30	4032-1	4024-1	REFER TO DRAG CONVEYOR PARTS	
DPX4T 224120	40	4032-1	4024-1	REFER TO DRAG CONVEYOR PARTS	
DPX8T 6440	10	4032-1	4024-1	4016-1	4024-1-1 1/4
DPX8T 9660	15	4032-1	4024-1	4016-1	4016-1-1 1/4
DPX8T 12880	20	4032-1	4024-1	4024-1	4024-1-1 1/4
DPX8T 160120	25	4032-1	4024-1	REFER TO DRAG CONVEYOR PARTS	
DPX8T 192120	30	4032-1	4024-1	REFER TO DRAG CONVEYOR PARTS	
DPX8T 256160	40	4032-1	4024-1	REFER TO DRAG CONVEYOR PARTS	
DPX12T 7250	10	4032-1	4026-1	4016-1	4016-1-1 1/4
DPX12T 10860	15	4032-1	4026-1	4016-1	4016-1-1 1/4
DPX12T 144100	20	4032-1	4026-1	4024-1	4024-1-1 1/4
DPX12T 175120	25	4032-1	4026-1	REFER TO DRAG CONVEYOR PARTS	
DPX12T 216150	30	4032-1	4026-1	REFER TO DRAG CONVEYOR PARTS	
DPX12T 288200	40	4032-1	4026-1	REFER TO DRAG CONVEYOR PARTS	

NOTE: 1. THE METERING IDLER SPROCKET 4017-1/2 IS THE SAME FOR ALL DRYERS.

2. REFER TO SPROCKET PAGE FOR PART NUMBERS.

SPROCKET CHART FOR 1 1/4" AUGER SHAFTS

380V-3P

MODEL	FT	METERING ROLLS	DC GEAR REDUCER	AUGER REDUCER	AUGER SHAFT
MSF 41515-CF	10	4016-1	4012-1	4020-1	4016-1-1 1/4
MSF 41515-AB	10	4016-1	4012-1	4020-1	4016-1-1 1/4
MSF 62520-CF	15	4016-1	4012-1	4020-1	4016-1-1 1/4
MSF 62520-AB	15	4016-1	4012-1	4020-1	4016-1-1 1/4
MSF 72525-CF	15	4016-1	4012-1	4020-1	4016-1-1 1/4
MSF 72525-AB	15	4016-1	4012-1	4020-1	4016-1-1 1/4
DP 3015	10	4032-1	4012-1 & 4060-1	NONE	4015-1-1 1/4
DP 4025	15	4032-1	4012-1	4016-1	4020-1-1 1/4
DP 6030	20	4032-1	4012-1	4016-1	4020-1-1 1/4
DP 7550	25	4032-1	4012-1	4020-1	4016-1-1 1/4
DP 9045	30	4032-1	4012-1	4020-1	4016-1-1 1/4
DP 12060	40	4032-1	4012-1	4024-1-1 1/4	4020-1-1 1/4
DPSL 3520	10	4032-1	4012-1 & 4060-1	NONE	4015-1-1 1/4
DPSL 4530	15	4032-1	4012-1	4016-1	4020-1-1 1/4
DPSL 7040	20	4032-1	4012-1	4016-1	4020-1-1 1/4
DPSL 8560	25	4032-1	4012-1	4020-1	4016-1-1 1/4
DPSL 10560	30	4032-1	4012-1	4020-1	4016-1-1 1/4
DPSL 14080	40	4032-1	4012-1	4024-1-1 1/4	4020-1-1 1/4
DPX 4525	10	4032-1	4016-1	4016-1	4020-1-1 1/4
DPX 7040	15	4032-1	4016-1	4016-1	4020-1-1 1/4
DPX 9050	20	4032-1	4016-1	4020-1	4016-1-1 1/4
DPX 13575	30	4032-1	4016-1	4024-1 1/4	4020-1-1 1/4
DPX 180100	40	4032-1	4016-1	REFER TO DRAG	CONVEYOR PARTS
DPXSL 5030	10	4032-1	4016-1	4016-1	4020-1-1 1/4
DPXSL 8050	15	4032-1	4016-1	4016-1	4020-1-1 1/4
DPXSL 10060	20	4032-1	4016-1	4020-1	4020-1-1 1/4
DPXSL 12560	25	4032-1	4016-1	4024-1 1/4	4020-1-1 1/4
DPXSL 15090	30	4032-1	4016-1	4024-1 1/4	4020-1-1 1/4
DPXSL 200120	40	4032-1	4016-1	REFER TO DRAG	CONVEYOR PARTS

NOTE: 1.THE METERING IDLER SPROCKET 4017-1/2 IS THE SAME FOR ALL DRYERS.

2.REFER TO SPROCKET PAGE FOR PART NUMBERS.

SPROCKET CHART FOR 1 1/4" AUGER SHAFTS

380V-3P

MODEL	FT	METERING ROLLS	DC GEAR REDUCER	AUGER REDUCER	AUGER SHAFT
DPX4T 5630	10	4032-1	4024-1	4016-1	4020-1-1 1/4
DPX4T 8460	15	4032-1	4024-1	4020-1	4016-1-1 1/4
DPX4T 11260	20	4032-1	4024-1	4020-1	4016-1-1 1/4
DPX4T 140100	25	4032-1	4024-1	4024-1 1/4	4020-1-1 1/4
DPX4T 16890	30	4032-1	4024-1	REFER TO DRAG CONVEYOR PARTS	
DPX4T 224120	40	4032-1	4024-1	REFER TO DRAG CONVEYOR PARTS	
DPX8T 6440	10	4032-1	4024-1	4016-1	4016-1-1 1/4
DPX8T 9660	15	4032-1	4024-1	4020-1	4016-1-1 1/4
DPX8T 12880	20	4032-1	4024-1	4020-1	4020-1-1 1/4
DPX8T 160120	25	4032-1	4024-1	REFER TO DRAG CONVEYOR PARTS	
DPX8T 192120	30	4032-1	4024-1	REFER TO DRAG CONVEYOR PARTS	
DPX8T 256160	40	4032-1	4024-1	REFER TO DRAG CONVEYOR PARTS	
DPX12T 7250	10	4032-1	4026-1	4016-1	4024-1-1 1/4
DPX12T 10860	15	4032-1	4026-1	4016-1	4024-1-1 1/4
DPX12T 144100	20	4032-1	4026-1	4016-1	4024-1-1 1/4
DPX12T 175120	25	4032-1	4026-1	REFER TO DRAG CONVEYOR PARTS	
DPX12T 216150	30	4032-1	4026-1	REFER TO DRAG CONVEYOR PARTS	
DPX12T 288200	40	4032-1	4026-1	REFER TO DRAG CONVEYOR PARTS	

NOTE: 1.THE METERING IDLER SPROCKET 4017-1/2 IS THE SAME FOR ALL DRYERS.

2.REFER TO SPROCKET PAGE FOR PART NUMBERS.

SPROCKET PART NUMBERS FOR 1 1/4" AUGER SHAFT SETS

MODELS: MSF – DP – DPSL – DPX – DPXSL – DPX4T – DPX8T – DPX12T

230V-1P – 240V-3P – 380V-3P – 480V-3P - 575V-3P

SPROCKET	CHAIN	TOOTH	BORE	PART NUMBER
4012 X 1	# 40	12	1"	047-002774
4015 X 1 1/4	# 40	15	1 1/4"	047-003643
4016 X 7/8	# 40	16	7/8"	200-005810
4016 X 1	# 40	16	1"	200-003034
4016 X 1 1/4	# 40	16	1 1/4"	200-003036
4017 X 1/2 (IDLER)	# 40	17	1/2"	047-002982
4020 X 1	# 40	20	1"	200-007875
4020 X 1 1/4	# 40	20	1 1/4"	200-001888
4024 X 1	# 40	24	1"	200-001895
4024 x 1 1/8	# 40	24	1 1/8	200-001896
4024 X 1 1/4	# 40	24	1 1/4"	200-002422
4026 X 1	# 40	26	1"	200-007407
4032 X 1	# 40	32	1"	200-003035
4048 X 1	# 40	48	1"	200-003687
4060 X 1	# 40	60	1"	200-007669
KEY – 3/16" X 3/16" X 1"				100-004230
KEY – 1/4" X 1/4" X 1 1/4"				100-002486
REDUCER BUSHING – 7/8 TO 5/8				052-007153

NOTE: TO ADAPT 140TC GEAR REDUCER TO 56C MOTOR

NOTE: SPROCKET SIZES ON AUGER REDUCER AND AUGER SHAFT ARE STATED TO OBTAIN A UNLOADING RATE FROM THE DRYER APPROXIMATLY TWO TIMES DRYER HOLDING CAPACITY.
YOU MAY DESIRE TO INCREASE OR DECREASE UNLOADING RATE BY CHANGING SPROCKET SIZE TO ALLOW FROM YEAR TO YEAR CHANGES IN INCOMING MOISTURE RATE OF YOUR PRODUCT.

STANDARD DISCHARGE SYSTEM

ALL MOTORS – 230V-1P – 240V-3P - 480V-3P

MODEL	FT	TYPE	MOTOR	MOTOR PART NUMBER	GEAR REDUCER	GEAR REDUCER PART NUMBER
MSF-31010-CF 1P	10	AUGER-8"	1HP-1750RPM-60HZ-115/230V-1P 143TC- 7/8-CLASS B	004-006471	5:1 140TC-7/8	052-008861
MSF-31010-AB 1P	10	AUGER-8"	1HP-1750RPM-60HZ-115/230V-1P 143TC- 7/8-CLASS B	004-006471	5:1 140TC-7/8	052-008861
MSF-41515-CF 1P	10	AUGER-8"	1HP-1750RPM-60HZ-115/230V-1P 143TC- 7/8-CLASS B	004-006471	5:1 140TC-7/8	052-008861
MSF-41515-AB 1P	10	AUGER-8"	1HP-1750RPM-60HZ-115/230V-1P 143TC- 7/8-CLASS B	004-006471	5:1 140TC-7/8	052-008861
MSF-41515-CF	10	AUGER-8"	1HP-1750RPM-60HZ-240/480V-3P 143TC- 7/8-CLASS B	004-005415	5:1 140TC-7/8	052-008861
MSF-41515-AB	10	AUGER-8"	1HP-1750RPM-60HZ-240/480V-3P 143TC- 7/8-CLASS B	004-005415	5:1 140TC-7/8	052-006469
MSF-62520-CF	15	AUGER-8"	1HP-1750RPM-60HZ-240/480V-3P 143TC- 7/8-CLASS B	004-005415	5:1 140TC-7/8	052-008861
MSF-62520-AB	15	AUGER-8"	1HP-1750RPM-60HZ-240/480V-3P 143TC- 7/8-CLASS B	004-005415	5:1 140TC-7/8	052-008861
MSF-72525-CF	15	AUGER-8"	1HP-1750RPM-60HZ-240/480V-3P 143TC- 7/8-CLASS B	004-005415	5:1 140TC-7/8	052-008861
MSF-72525-AB	15	AUGER-8"	1HP-1750RPM-60HZ-240/480V-3P 143TC- 7/8-CLASS B	004-005415	5:1 140TC-7/8	052-008861
DP 2510 1P	10	AUGER-8"	DRIVES FROM DC			
DP 3015 1P	10	AUGER-8"	DRIVES FROM DC			
DP 4020 1P	15	AUGER-8"	1HP-1750RPM-60HZ-115/230V-1P 143TC- 7/8-CLASS B	004-006471	5:1 140TC-7/8	052-008861
DP 5020 1P	20	AUGER-8"	1HP-1750RPM-60HZ-115/230V-1P 143TC- 7/8-CLASS B	004-006471	5:1 140TC-7/8	052-008861
DP 7530 1P	30	AUGER-8"	2HP-1750RPM-60HZ-115/230V-1P 182TC-1-1/8-CLASS B	004-007896	5:1 180TC-1 1/8	052-008862
DP 10040 1P	40	AUGER-8"	3HP-1750RPM-60HZ- 230V-1P 184TC-1-1/8-CLASS B	004-006473	5:1 180TC-1 1/8	052-008862
DP 3015	10	AUGER-8"	DRIVES FROM DC			
DP 4025	15	AUGER-8"	1HP-1750RPM-60HZ-240/480V-3P 143TC- 7/8-CLASS B	004-005415	5:1 140TC-7/8	052-008861
DP 6030	20	AUGER-8"	1HP-1750RPM-60HZ-240/480V-3P 143TC- 7/8-CLASS B	004-005415	5:1 140TC-7/8	052-008861
DP 7550	25	AUGER-8"	2HP-1750RPM-60HZ-240/480V-3P 145TC- 7/8-CLASS B	004-005416	5:1 140TC-7/8	052-008861
DP 9045	30	AUGER-8"	2HP-1750RPM-60HZ-240/480V-3P 145TC- 7/8-CLASS B	004-005416	5:1 140TC-7/8	052-008861
DP 12060	40	AUGER-8"	3HP-1750RPM-60HZ-240/480V-3P 182TC-1-1/8-CLASS B	004-001980	5:1 180TC-1 1/8	052-008862
DP-SL 3520	10	AUGER-8"	DRIVES FROM DC			
DP-SL 4530	15	AUGER-8"	1HP-1750RPM-60HZ-240/480V-3P 143TC- 7/8-CLASS B	004-005415	5:1 140TC-7/8	052-008861
DP-SL 7040	20	AUGER-8"	1HP-1750RPM-60HZ-240/480V-3P 143TC- 7/8-CLASS B	004-005415	5:1 140TC-7/8	052-008861
DP-SL 8560	25	AUGER-8"	2HP-1750RPM-60HZ-240/480V-3P 145TC- 7/8-CLASS B	004-005416	5:1 140TC-7/8	052-008861
DP-SL 10560	30	AUGER-8"	2HP-1750RPM-60HZ-240/480V-3P 145TC- 7/8-CLASS B	004-005416	5:1 140TC-7/8	052-008861
DP-SL 14080	40	AUGER-8"	3HP-1750RPM-60HZ-240/480V-3P 182TC-1-1/8-CLASS B	004-001980	5:1 180TC-1 1/8	052-008862

NOTE: 1. ALL MOTORS SHOWN 240V/480V-3P UNLESS STATED (1P) INDICATING 230V-1P

2. DRAG CAPACITIES @ 5 POINTS
   30:1 UP TO 1200 BU/HR DRYER MAX. 2310 BU 2HP (DRAG 8″ WIDE X 10″ HIGH)
   20:1 UP TO 1900 BU/HR DRYER MAX. 3465 BU 3HP (DRAG 8″ WIDE X 10″ HIGH)
   15:1 UP TO 2560 BU HR DRYER MAX. 4620 BU 3HP (DRAG 8″ WIDE X 10″ HIGH
   30:1 UP TO 2880 BU/HR DRYER MAX. 5355 BU 5HP (DRAG 8″ WIDE X 14″ HIGH) - DPX12T ONLY

3. WHEN ORDERING GEAR REDUCERS STATE: BRAND – RATIO - FRAME - SHAFT DIAMETER.

STANDARD DISCHARGE SYSTEM

ALL MOTORS – 230V-1P – 240V-3P - 480V-3P

MODEL	FT	TYPE	MOTOR	MOTOR PART NUMBER	GEAR REDUCER	GEAR REDUCER PART NUMBER
DPX 4525	10	AUGER-8"	1HP-1750RPM-60HZ-240/480V-3P 143TC- 7/8-CLASS B	004-005415	5:1 140TC-7/8	052-008861
DPX 7040	15	AUGER-8"	1HP-1750RPM-60HZ-240/480V-3P 143TC- 7/8-CLASS B	004-005415	5:1 140TC-7/8	052-008861
DPX 9050	20	AUGER-8"	2HP-1750RPM-60HZ-240/480V-3P 145TC- 7/8-CLASS B	004-005416	5:1 140TC-7/8	052-008861
DPX 13575	30	AUGER-8"	3HP-1750RPM-60HZ-240/480V-3P 182TC-1-1/8-CLASS B	004-001980	5:1 180TC-1 1/8	052-008862
DPX 180100	40	DRAG-8"	3HP-1750RPM-60HZ-240/480V-3P 182TC-1-1/8-CLASS B	004-001980	20:1-180TC-1-1/4	052-008864
DPX-SL 5030	10	AUGER-8"	1HP-1750RPM-60HZ-240/480V-3P 143TC- 7/8-CLASS B	004-005415	5:1 140TC-7/8	052-008861
DPX-SL 8050	15	AUGER-8"	1HP-1750RPM-60HZ-240/480V-3P 143TC- 7/8-CLASS B	004-005415	5:1 140TC-7/8	052-008861
DPX-SL 10060	20	AUGER-8"	2HP-1750RPM-60HZ-240/480V-3P 145TC- 7/8-CLASS B	004-005416	5:1 140TC-7/8	052-008861
DPX-SL 12560	25	AUGER-8"	3HP-1750RPM-60HZ-240/480V-3P 182TC-1-1/8-CLASS B	004-001980	5:1 180TC-1 1/8	052-008862
DPX-SL 15090	30	AUGER-8"	3HP-1750RPM-60HZ-240/480V-3P 182TC-1-1/8-CLASS B	004-001980	5:1 180TC-1 1/4	052-008862
DPX-SL 200120	40	DRAG-8"	3HP-1750RPM-60HZ-240/480V-3P 182TC-1-1/8-CLASS B	004-001980	20:1-180TC-1-1/4	052-008864
DPX4T 5630	10	AUGER-8"	1HP-1750RPM-60HZ-240/480V-3P 143TC- 7/8-CLASS B	004-005415	5:1 140TC-7/8	052-008861
DPX4T 8460	15	AUGER-8"	2HP-1750RPM-60HZ-240/480V-3P 145TC- 7/8-CLASS B	004-005416	5:1 140TC-7/8	052-008861
DPX4T 11260	20	AUGER-8"	2HP-1750RPM-60HZ-240/480V-3P 145TC- 7/8-CLASS B	004-005416	5:1 140TC-7/8	052-008861
DPX4T 140100	25	AUGER-8"	3HP-1750RPM-60HZ-240/480V-3P 182TC-1-1/8-CLASS B	004-001980	5:1 180TC-1 1/8	052-008862
DPX4T 16890	30	DRAG-8"	3HP-1750RPM-60HZ-240/480V-3P 182TC-1-1/8-CLASS B	004-001980	20:1-180TC-1-1/4	052-008864
DPX4T 224120	40	DRAG-8"	3HP-1750RPM-60HZ-240/480V-3P 182TC-1-1/8-CLASS B	004-001980	15:1 180TC-1 1/8	052-008865
DPX8T 6440	10	AUGER-8"	1HP-1750RPM-60HZ-240/480V-3P 143TC- 7/8-CLASS B	004-005415	5:1 140TC-7/8	052-008861
DPX8T 9660	15	N/A				
DPX8T 12880	20	AUGER-8"	2HP-1750RPM-60HZ-240/480V-3P 145TC- 7/8-CLASS B	004-005416	5:1 140TC-7/8	052-008861
DPX8T 160120	25	DRAG-8"	3HP-1750RPM-60HZ-240/480V-3P 182TC-1-1/8-CLASS B	004-001980	20:1-180TC-1-1/4	052-008864
DPX8T 192120	30	DRAG-8"	3HP-1750RPM-60HZ-240/480V-3P 182TC-1-1/8-CLASS B	004-001980	20:1-180TC-1-1/4	052-008864
DPX8T 256160	40	DRAG-8"	3HP-1750RPM-60HZ-240/480V-3P 182TC-1-1/8-CLASS B	004-001980	15:1 180TC-1 1/8	052-008865
DPX12T 7250	10	AUGER-8"	1HP-1750RPM-60HZ-240/480V-3P 143TC- 7/8-CLASS B	004-005415	5:1 140TC-7/8	052-008861
DPX12T 10860	15	AUGER-8"	2HP-1750RPM-60HZ-240/480V-3P 145TC- 7/8-CLASS B	004-005416	5:1 140TC-7/8	052-008861
DPX12T 144100	20	AUGER-8"	2HP-1750RPM-60HZ-240/480V-3P 145TC- 7/8-CLASS B	004-005416	5:1 140TC-7/8	052-008861
DPX12T 175120	25	DRAG-8"	3HP-1750RPM-60HZ-240/480V-3P 182TC-1-1/8-CLASS B	004-001980	20:1-180TC-1-1/4	052-008864
DPX12T 216150	30	DRAG-8"	3HP-1750RPM-60HZ-240/480V-3P 182TC-1-1/8-CLASS B	004-001980	15:1 180TC-1 1/8	052-008865
DPX12T 288200	40	DRAG-8"	5HP-1750RPM-60HZ-240/480V-3P 184TC-1-1/8-CLASS B	004-001982	30:1 180TC-1-7/8	052-008866

NOTE: 1. ALL MOTORS SHOWN 240V/480V-3P UNLESS STATED (1P) INDICATING 230V-1P

2. DRAG CAPACITIES @ 5 POINTS
   30:1 UP TO 1200 BU/HR DRYER MAX. 2310 BU 2HP (DRAG 8″ WIDE X 10″ HIGH)
   20:1 UP TO 1900 BU/HR DRYER MAX. 3465 BU 3HP (DRAG 8″ WIDE X 10″ HIGH)
   15:1 UP TO 2560 BU HR DRYER MAX. 4620 BU 3HP (DRAG 8″ WIDE X 10″ HIGH
   30:1 UP TO 2880 BU/HR DRYER MAX. 5355 BU 5HP (DRAG 8″ WIDE X 14″ HIGH) - DPX12T ONLY

3. WHEN ORDERING GEAR REDUCERS STATE: BRAND – RATIO - FRAME - SHAFT DIAMETER.

STANDARD DISCHARGE SYSTEM

ALL MOTORS – 380V-3P

MODEL	FT	TYPE	MOTOR	MOTOR PART NUMBER	GEAR REDUCER	GEAR REDUCER PART NUMBER
MSF-41515-CF	10	AUGER-8"	1HP-1450RPM-50HZ- 380V-3P 143TC- 7/8-CLASS B	004-007865	5:1 140TC-7/8	052-008861
MSF-41515-AB	10	AUGER-8"	1HP-1450RPM-50HZ- 380V-3P 143TC- 7/8-CLASS B	004-007865	5:1 140TC-7/8	052-008861
MSF-62520-CF	15	AUGER-8"	1HP-1450RPM-50HZ- 380V-3P 143TC- 7/8-CLASS B	004-007865	5:1 140TC-7/8	052-008861
MSF-62520-AB	15	AUGER-8"	1HP-1450RPM-50HZ- 380V-3P 143TC- 7/8-CLASS B	004-007865	5:1 140TC-7/8	052-008861
MSF-72525-CF	15	AUGER-8"	1HP-1450RPM-50HZ- 380V-3P 143TC- 7/8-CLASS B	004-007865	5:1 140TC-7/8	052-008861
MSF-72525-AB	15	AUGER-8"	1HP-1450RPM-50HZ- 380V-3P 143TC- 7/8-CLASS B	004-007865	5:1 140TC-7/8	052-008861
DP 3015	10	AUGER-8"	DRIVES FROM DC			
DP 4025	15	AUGER-8"	1HP-1450RPM-50HZ- 380V-3P 143TC- 7/8-CLASS B	004-007865	5:1 140TC-7/8	052-008861
DP 6030	20	AUGER-8"	1HP-1450RPM-50HZ- 380V-3P 143TC- 7/8-CLASS B	004-007865	5:1 140TC-7/8	052-008861
DP 7550	25	AUGER-8"	2HP-1450RPM-50HZ- 380V-3P 145TC- 7/8-CLASS B	004-007866	5:1 140TC-7/8	052-008861
DP 9045	30	AUGER-8"	2HP-1450RPM-50HZ- 380V-3P 145TC- 7/8-CLASS B	004-007866	5:1 140TC-7/8	052-008861
DP 12060	40	AUGER-8"	3HP-1450RPM-50HZ- 380V-3P 182TC-1-1/8-CLASS B	004-007867	5:1 180TC-1 1/8	052-008862
DP-SL 3520	10	AUGER-8"	DRIVES FROM DC			
DP-SL 4530	15	AUGER-8"	1HP-1450RPM-50HZ- 380V-3P 143TC- 7/8-CLASS B	004-007865	5:1 140TC-7/8	052-008861
DP-SL 7040	20	AUGER-8"	1HP-1450RPM-50HZ- 380V-3P 143TC- 7/8-CLASS B	004-007865	5:1 140TC-7/8	052-008861
DP-SL 8560	25	AUGER-8"	2HP-1450RPM-50HZ- 380V-3P 145TC- 7/8-CLASS B	004-007866	5:1 140TC-7/8	052-008861
DP-SL 10560	30	AUGER-8"	2HP-1450RPM-50HZ- 380V-3P 145TC- 7/8-CLASS B	004-007866	5:1 140TC-7/8	052-008861
DP-SL 14080	40	AUGER-8"	3HP-1450RPM-50HZ- 380V-3P 182TC-1-1/8-CLASS B	004-007867	5:1 180TC-1 1/8	052-008862

NOTE: 1. ALL MOTORS SHOWN 380V-3P.

2. DRAG CAPACITIES @ 5 POINTS

30:1 UP TO 1200 BU/HR DRYER MAX. 2310 BU 2HP (DRAG 8″ WIDE X 10″ HIGH)
20:1 UP TO 1900 BU/HR DRYER MAX. 3465 BU 3HP (DRAG 8″ WIDE X 10″ HIGH)
15:1 UP TO 2560 BU HR DRYER MAX. 4620 BU 3HP (DRAG 8″ WIDE X 10″ HIGH
30:1 UP TO 2880 BU/HR DRYER MAX. 5355 BU 5HP (DRAG 8″ WIDE X 14″ HIGH) - DPX12T ONLY

3. WHEN ORDERING GEAR REDUCERS STATE: BRAND – RATIO - FRAME - SHAFT DIAMETER.

STANDARD DISCHARGE SYSTEM

ALL MOTORS – 380V-3P

MODEL	FT	TYPE	MOTOR	MOTOR PART NUMBER	GEAR REDUCER	GEAR REDUCER PART NUMBER
DPX 4525	10	AUGER-8"	1HP-1450RPM-50HZ- 380V-3P 143TC- 7/8-CLASS B	004-007865	5:1 140TC-7/8	052-008861
DPX 7040	15	AUGER-8"	1HP-1450RPM-50HZ- 380V-3P 143TC- 7/8-CLASS B	004-007865	5:1 140TC-7/8	052-008861
DPX 9050	20	AUGER-8"	2HP-1450RPM-50HZ- 380V-3P 145TC- 7/8-CLASS B	004-007866	5:1 140TC-7/8	052-008861
DPX 13575	30	AUGER-8"	3HP-1450RPM-50HZ- 380V-3P 182TC-1-1/8-CLASS B	004-007867	5:1 180TC-1 1/8	052-008862
DPX 180100	40	DRAG-8"	3HP-1450RPM-50HZ- 380V-3P 182TC-1-1/8-CLASS B	004-007867	20:1-180TC-1-1/4	052-008864
DPX-SL 5030	10	AUGER-8"	1HP-1450RPM-50HZ- 380V-3P 143TC- 7/8-CLASS B	004-007865	5:1 140TC-7/8	052-008861
DPX-SL 8050	15	AUGER-8"	1HP-1450RPM-50HZ- 380V-3P 143TC- 7/8-CLASS B	004-007865	5:1 140TC-7/8	052-008861
DPX-SL 10060	20	AUGER-8"	2HP-1450RPM-50HZ- 380V-3P 145TC- 7/8-CLASS B	004-007866	5:1 140TC-7/8	052-008861
DPX-SL 12560	25	AUGER-8"	3HP-1450RPM-50HZ- 380V-3P 182TC-1-1/8-CLASS B	004-007867	5:1 180TC-1 1/8	052-008862
DPX-SL 15090	30	AUGER-8"	3HP-1450RPM-50HZ- 380V-3P 182TC-1-1/8-CLASS B	004-007867	5:1 180TC-1 1/8	052-008862
DPX-SL 200120	40	DRAG-8"	3HP-1450RPM-50HZ- 380V-3P 182TC-1-1/8-CLASS B	004-007867	20:1-180TC-1-1/4	052-008864
DPX4T 5630	10	AUGER-8"	1HP-1450RPM-50HZ- 380V-3P 143TC- 7/8-CLASS B	004-007865	5:1 140TC-7/8	052-008861
DPX4T 8460	15	AUGER-8"	2HP-1450RPM-50HZ- 380V-3P 145TC- 7/8-CLASS B	004-007866	5:1 140TC-7/8	052-008861
DPX4T 11260	20	AUGER-8"	2HP-1450RPM-50HZ- 380V-3P 145TC- 7/8-CLASS B	004-007866	5:1 140TC-7/8	052-008861
DPX4T 140100	25	AUGER-8"	3HP-1450RPM-50HZ- 380V-3P 182TC-1-1/8-CLASS B	004-007867	5:1 180TC-1 1/8	052-008862
DPX4T 16890	30	DRAG-8"	3HP-1450RPM-50HZ- 380V-3P 182TC-1-1/8-CLASS B	004-007867	20:1-180TC-1-1/4	052-008864
DPX4T 224120	40	DRAG-8"	3HP-1450RPM-50HZ- 380V-3P 182TC-1-1/8-CLASS B	004-007867	15:1 180TC-1 1/8	052-008865
DPX8T 6440	10	AUGER-8"	1HP-1450RPM-50HZ- 380V-3P 143TC- 7/8-CLASS B	004-007865	5:1 140TC-7/8	052-008861
DPX8T 9660	15	N/A				
DPX8T 12880	20	AUGER-8"	2HP-1450RPM-50HZ- 380V-3P 145TC- 7/8-CLASS B	004-007866	5:1 140TC-7/8	052-008861
DPX8T 160120	25	DRAG-8"	3HP-1450RPM-50HZ- 380V-3P 182TC-1-1/8-CLASS B	004-007867	20:1-180TC-1-1/4	052-008864
DPX8T 192120	30	DRAG-8"	3HP-1450RPM-50HZ- 380V-3P 182TC-1-1/8-CLASS B	004-007867	20:1-180TC-1-1/4	052-008864
DPX8T 256160	40	DRAG-8"	3HP-1450RPM-50HZ- 380V-3P 182TC-1-1/8-CLASS B	004-007867	15:1 180TC-1 1/8	052-008865
DPX12T 7250	10	AUGER-8"	1HP-1450RPM-50HZ- 380V-3P 143TC- 7/8-CLASS B	004-007865	5:1 140TC-7/8	052-008861
DPX12T 10860	15	AUGER-8"	2HP-1450RPM-50HZ- 380V-3P 145TC- 7/8-CLASS B	004-007866	5:1 140TC-7/8	052-008861
DPX12T 144100	20	AUGER-8"	2HP-1450RPM-50HZ- 380V-3P 145TC- 7/8-CLASS B	004-007866	5:1 140TC-7/8	052-008861
DPX12T 175120	25	DRAG-8"	3HP-1450RPM-50HZ- 380V-3P 182TC-1-1/8-CLASS B	004-007867	20:1-180TC-1-1/4	052-008864
DPX12T 216150	30	DRAG-8"	3HP-1450RPM-50HZ- 380V-3P 182TC-1-1/8-CLASS B	004-007867	15:1 180TC-1 1/8	052-008865
DPX12T 288200	40	DRAG-8"	5HP-1450RPM-50HZ- 380V-3P 184TC-1-1/8-CLASS B	004-007868	30:1 180TC-1-7/8	052-008866

NOTE: 1. ALL MOTORS SHOWN 380V-3P.

2. DRAG CAPACITIES @ 5 POINTS

30:1 UP TO 1200 BU/HR DRYER MAX. 2310 BU 2HP (DRAG 8″ WIDE X 10″ HIGH)
20:1 UP TO 1900 BU/HR DRYER MAX. 3465 BU 3HP (DRAG 8″ WIDE X 10″ HIGH)
15:1 UP TO 2560 BU HR DRYER MAX. 4620 BU 3HP (DRAG 8″ WIDE X 10″ HIGH
30:1 UP TO 2880 BU/HR DRYER MAX. 5355 BU 5HP (DRAG 8″ WIDE X 14″ HIGH) - DPX12T ONLY

3. WHEN ORDERING GEAR REDUCERS STATE: BRAND – RATIO - FRAME - SHAFT DIAMETER.

STANDARD DISCHARGE SYSTEM

ALL MOTORS – 575V-3P

MODEL	FT	TYPE	MOTOR	MOTOR PART NUMBER	GEAR REDUCER	GEAR REDUCER PART NUMBER
MSF-41515-CF	10	AUGER-8"	1HP-1750RPM-60HZ- 575V-3P 143TC- 7/8-CLASS B	004-007424	5:1 140TC-7/8	052-008861
MSF-41515-AB	10	AUGER-8"	1HP-1750RPM-60HZ- 575V-3P 143TC- 7/8-CLASS B	004-007424	5:1 140TC-7/8	052-008861
MSF-62520-CF	15	AUGER-8"	1HP-1750RPM-60HZ- 575V-3P 143TC- 7/8-CLASS B	004-007424	5:1 140TC-7/8	052-008861
MSF-62520-AB	15	AUGER-8"	1HP-1750RPM-60HZ- 575V-3P 143TC- 7/8-CLASS B	004-007424	5:1 140TC-7/8	052-008861
MSF-72525-CF	15	AUGER-8"	1HP-1750RPM-60HZ- 575V-3P 143TC- 7/8-CLASS B	004-007424	5:1 140TC-7/8	052-008861
MSF-72525-AB	15	AUGER-8"	1HP-1750RPM-60HZ- 575V-3P 143TC- 7/8-CLASS B	004-007424	5:1 140TC-7/8	052-008861
DP 3015	10	AUGER-8"	DRIVES FROM DC			
DP 4025	15	AUGER-8"	1HP-1750RPM-60HZ- 575V-3P 143TC- 7/8-CLASS B	004-007424	5:1 140TC-7/8	052-008861
DP 6030	20	AUGER-8"	1HP-1750RPM-60HZ- 575V-3P 143TC- 7/8-CLASS B	004-007424	5:1 140TC-7/8	052-008861
DP 7550	25	AUGER-8"	2HP-1750RPM-60HZ- 575V-3P 145TC- 7/8-CLASS B	004-007616	5:1 140TC-7/8	052-008861
DP 9045	30	AUGER-8"	2HP-1750RPM-60HZ- 575V-3P 145TC- 7/8-CLASS B	004-007616	5:1 140TC-7/8	052-008861
DP 12060	40	AUGER-8"	3HP-1750RPM-60HZ- 575V-3P 182TC-1-1/8-CLASS B	004-007571	5:1 180TC-1 1/8	052-008862
DP-SL 3520	10	AUGER-8"	DRIVES FROM DC			
DP-SL 4530	15	AUGER-8"	1HP-1750RPM-60HZ- 575V-3P 143TC- 7/8-CLASS B	004-007424	5:1 140TC-7/8	052-008861
DP-SL 7040	20	AUGER-8"	1HP-1750RPM-60HZ- 575V-3P 143TC- 7/8-CLASS B	004-007424	5:1 140TC-7/8	052-008861
DP-SL 8560	25	AUGER-8"	2HP-1750RPM-60HZ- 575V-3P 145TC- 7/8-CLASS B	004-007616	5:1 140TC-7/8	052-008861
DP-SL 10560	30	AUGER-8"	2HP-1750RPM-60HZ- 575V-3P 145TC- 7/8-CLASS B	004-007616	5:1 140TC-7/8	052-008861
DP-SL 14080	40	AUGER-8"	3HP-1750RPM-60HZ- 575V-3P 182TC-1-1/8-CLASS B	004-007571	5:1 180TC-1 1/8	052-008862

NOTE: 1. ALL MOTORS SHOWN 575V-3P.

2. DRAG CAPACITIES @ 5 POINTS
   30:1 UP TO 1200 BU/HR DRYER MAX. 2310 BU 2HP (DRAG 8″ WIDE X 10″ HIGH)
   20:1 UP TO 1900 BU/HR DRYER MAX. 3465 BU 3HP (DRAG 8″ WIDE X 10″ HIGH)
   15:1 UP TO 2560 BU HR DRYER MAX. 4620 BU 3HP (DRAG 8″ WIDE X 10″ HIGH
   30:1 UP TO 2880 BU/HR DRYER MAX. 5355 BU 5HP (DRAG 8″ WIDE X 14″ HIGH) - DPX12T ONLY

3. WHEN ORDERING GEAR REDUCERS STATE: BRAND – RATIO - FRAME - SHAFT DIAMETER.

STANDARD DISCHARGE SYSTEM

ALL MOTORS – 575V-3P

MODEL	FT	TYPE	MOTOR	MOTOR PART NUMBER	GEAR REDUCER	GEAR REDUCER PART NUMBER
DPX 4525	10	AUGER-8"	1HP-1750RPM-60HZ- 575V-3P 143TC- 7/8-CLASS B	004-007424	5:1 140TC-7/8	052-008861
DPX 7040	15	AUGER-8"	1HP-1750RPM-60HZ- 575V-3P 143TC- 7/8-CLASS B	004-007424	5:1 140TC-7/8	052-008861
DPX 9050	20	AUGER-8"	2HP-1750RPM-60HZ- 575V-3P 145TC- 7/8-CLASS B	004-007616	5:1 140TC-7/8	052-008861
DPX 13575	30	AUGER-8"	3HP-1750RPM-60HZ- 575V-3P 182TC-1-1/8-CLASS B	004-007571	5:1 180TC-1 1/8	052-008862
DPX 180100	40	DRAG-8"	3HP-1750RPM-60HZ- 575V-3P 182TC-1-1/8-CLASS B	004-007571	20:1-180TC-1-1/4	052-008864
DPX-SL 5030	10	AUGER-8"	1HP-1750RPM-60HZ- 575V-3P 143TC- 7/8-CLASS B	004-007424	5:1 140TC-7/8	052-008861
DPX-SL 8050	15	AUGER-8"	1HP-1750RPM-60HZ- 575V-3P 143TC- 7/8-CLASS B	004-007424	5:1 140TC-7/8	052-008861
DPX-SL 10060	20	AUGER-8"	2HP-1750RPM-60HZ- 575V-3P 145TC- 7/8-CLASS B	004-007616	5:1 140TC-7/8	052-008861
DPX-SL 12560	25	AUGER-8"	3HP-1750RPM-60HZ- 575V-3P 182TC-1-1/8-CLASS B	004-007571	5:1 180TC-1 1/8	052-008862
DPX-SL 15090	30	AUGER-8"	3HP-1750RPM-60HZ- 575V-3P 182TC-1-1/8-CLASS B	004-007571	5:1 180TC-1 1/8	052-008862
DPX-SL 200120	40	DRAG-8"	3HP-1750RPM-60HZ- 575V-3P 182TC-1-1/8-CLASS B	004-007571	20:1-180TC-1-1/4	052-008864
DPX4T 5630	10	AUGER-8"	1HP-1750RPM-60HZ- 575V-3P 143TC- 7/8-CLASS B	004-007424	5:1 140TC-7/8	052-008861
DPX4T 8460	15	AUGER-8"	2HP-1750RPM-60HZ- 575V-3P 145TC- 7/8-CLASS B	004-007616	5:1 140TC-7/8	052-008861
DPX4T 11260	20	AUGER-8"	2HP-1750RPM-60HZ- 575V-3P 145TC- 7/8-CLASS B	004-007616	5:1 140TC-7/8	052-008861
DPX4T 140100	25	AUGER-8"	3HP-1750RPM-60HZ- 575V-3P 182TC-1-1/8-CLASS B	004-007571	5:1 180TC-1 1/8	052-008862
DPX4T 16890	30	DRAG-8"	3HP-1750RPM-60HZ- 575V-3P 182TC-1-1/8-CLASS B	004-007571	20:1-180TC-1-1/4	052-008864
DPX4T 224120	40	DRAG-8"	3HP-1750RPM-60HZ- 575V-3P 182TC-1-1/8-CLASS B	004-007571	15:1 180TC-1 1/8	052-008865
DPX8T 6440	10	AUGER-8"	1HP-1750RPM-60HZ- 575V-3P 143TC- 7/8-CLASS B	004-007424	5:1 140TC-7/8	052-008861
DPX8T 9660	15	N/A				
DPX8T 12880	20	AUGER-8"	2HP-1750RPM-60HZ- 575V-3P 145TC- 7/8-CLASS B	004-007616	5:1 140TC-7/8	052-008861
DPX8T 160120	25	DRAG-8"	3HP-1750RPM-60HZ- 575V-3P 182TC-1-1/8-CLASS B	004-007571	20:1-180TC-1-1/4	052-008864
DPX8T 192120	30	DRAG-8"	3HP-1750RPM-60HZ- 575V-3P 182TC-1-1/8-CLASS B	004-007571	20:1-180TC-1-1/4	052-008864
DPX8T 256160	40	DRAG-8"	3HP-1750RPM-60HZ- 575V-3P 182TC-1-1/8-CLASS B	004-007571	15:1 180TC-1 1/8	052-008865
DPX12T 7250	10	AUGER-8"	1HP-1750RPM-60HZ- 575V-3P 143TC- 7/8-CLASS B	004-007424	5:1 140TC-7/8	052-008861
DPX12T 10860	15	AUGER-8"	2HP-1750RPM-60HZ- 575V-3P 145TC- 7/8-CLASS B	004-007616	5:1 140TC-7/8	052-008861
DPX12T 144100	20	AUGER-8"	2HP-1750RPM-60HZ- 575V-3P 145TC- 7/8-CLASS B	004-007616	5:1 140TC-7/8	052-008861
DPX12T 175120	25	DRAG-8"	3HP-1750RPM-60HZ- 575V-3P 182TC-1-1/8-CLASS B	004-007571	20:1-180TC-1-1/4	052-008864
DPX12T 216150	30	DRAG-8"	3HP-1750RPM-60HZ- 575V-3P 182TC-1-1/8-CLASS B	004-007571	15:1 180TC-1 1/8	052-008865
DPX12T 288200	40	DRAG-8"	5HP-1750RPM-60HZ- 575V-3P 184TC-1-1/8-CLASS B	004-007631	30:1 180TC-1-7/8	052-008866

NOTE: 1. ALL MOTORS SHOWN 575V-3P.

2. DRAG DISCHARGE CAPACITIES @ 5 POINTS
   30:1 UP TO 1200 BU/HR DRYER MAX. 2310 BU 2HP (DRAG 8″ WIDE X 10″ HIGH)
   20:1 UP TO 1900 BU/HR DRYER MAX. 3465 BU 3HP (DRAG 8″ WIDE X 10″ HIGH)
   15:1 UP TO 2560 BU HR DRYER MAX. 4620 BU 3HP (DRAG 8″ WIDE X 10″ HIGH
   30:1 UP TO 2880 BU/HR DRYER MAX. 5355 BU 5HP (DRAG 8″ WIDE X 14″ HIGH) - DPX12T ONLY

3. WHEN ORDERING GEAR REDUCERS STATE: BRAND – RATIO - FRAME - SHAFT DIAMETER.

AUTOMATIC MOISTURE CONTROL SYSTEM

SCR CONTROL: KB DC DRIVE – MODIFIED	100-009171
FUSE: 15 AMP - SCR CONTROL (KB DC DRIVE)	000-004705
FUSE: 20 AMP - SCR CONTROL (KB DC DRIVE)	000-00XXXX
MOISTURE CONTROL PID: WATLOW EZ-ZONE (PM6C1FA-AAAAAAA)	006-009168
MOISTURE SENSOR:(ONLY) MINCO – 100 OHM-RTD 3-WIRE LENGTH 9FT	009-007200
MOISTURE SENSOR ASS'Y MINCO – 100 OHM-RTD 3-WIRE LENGTH 9FT	400-008027
MOISTURE SENSOR:(ONLY) MINCO – 100 OHM-RTD 3-WIRE LENGTH 19FT	009-007201
MOISTURE SENSOR ASS'Y MINCO – 100 OHM-RTD 3-WIRE LENGTH 19FT	400-008028
MOISTURE SENSOR:(ONLY) MINCO – 100 OHM-RTD 3-WIRE LENGTH 29FT	009-007202
MOISTURE SENSOR ASS'Y MINCO – 100 OHM-RTD 3-WIRE LENGTH 29FT	400-008029
POT MANUAL SPEED CONTROL SCR: 5K	006-003003
KNOB: POT MANUAL SPEED CONTROL SCR	016-005484
SCR SELECTOR SWITCH MAN/AUTO: TOGGLE - DPDT ON/OFF/ON	010-003132
BOOT PROTECTOR: SCR SELECTOR SWITCH MAN/AUTO	016-004791
DC VOLTMETER: SIMPSON MODEL 1227 0 TO 100VDC	017-007946
MOISTURE RELAY: (8)PIN - DPDT - 120V	007-000725
RELAY SOCKET: 8 PIN 120V - MOISTURE	007-008938

AUTOMATIC TEMPERATURE CONTROL SYSTEM

AUTOMATIC TEMP CONT. /H. LIMIT: WATLOW EZ-ZONE (PM6CFA-ALEJAAA)		006-009149
TEMPERATURE CONROL SENSOR: WATLOW 100Ω RTD STEM		009-007199
HIGH LIMIT SENSOR: WATLOW 100Ω RTD STEM		009-007199
SENSOR BOX: 4X4X2 PVC W/COVER		016-003537
SENSOR CORD GRIP:		016-000976
HIGH LIMIT RELAY: 8 PIN-DPDT-120V		007-000725
RELAY SOCKET: 8 PIN 120V – HIGH LIMIT		007-008938
HIGH LIMIT CONTROL: SPST - 100/300F - 6FT	(MSF ONLY)	006-005470
VAPOR HIGH LIMIT: SPST - OPEN - 220F	(MSF ONLY)	006-005472
QUICK ACTING VALVE: 1/2"		028-003013
QUICK ACTING VALVE: 3/4"		028-005529
RELIEF VALVE W/ RAIN CAP: POP ACTION		028-003014
RAIN CAP: RELIEF VALVE		028-003015
LIQUID VALVE: ASCO 1/2"		028-003097
LIQUID VALVE: ASCO 3/4"		028-005482
REPLACEMENT COIL LIQUID VALVE: ASCO 1/2" & 3/4"		014-006291
REPLACEMENT DIAPHRAGM KIT LIQUID VALVE: ASCO 1/2"		028-005206
REPLACEMENT DIAPHRAGM KIT LIQUID VALVE: ASCO 3/4"		028-007150
VAPORIZER: 4-ROW (10FT DP/DPSL)		031-003093
VAPORIZER: 6-ROW (15FT & 20FT DP/DPSL)		031-003094
VAPORIZER: 8-ROW (25FT & 30FT DP/DPSL)		031-003095
VAPORIZER: ROUND 24 1/2" DIA.	(MSF ONLY)	031-005477
LIQUID PROPANE REGULATOR: REGO 1/2" MAX 30#		028-003012
REGULATOR REPAIR KIT: REGO 1/2"		028-005483
LIQUID PROPANE REGULATOR: REGO 2" MAX 500# (BIG JOE)		028-006316

AUTOMATIC TEMPERATURE CONTROL SYSTEM

TEMPERATURE CONTROL BUTTERFLY VALVE: ECLIPSE 1-1/4″	028-008957
TEMPERATURE CONTROL BUTTERFLY VALVE: ECLIPSE 2″	028-005933
BUTTERFLY VALVE MOUNT KIT: ECLIPSE	028-005936
TEMPERATURE CONTROL MODULATING MOTOR: JOHNSON CONTROL M150X	004-005418
TEMPERATURE CONTROL INTERFACE BOARD: JOHNSON R81GAA-2	006-005421
TEMPERATURE CONTROL MOTOR LINKAGE ARM:	028-008958
TEMPERATURE CONTROL MOTOR WEATHER COVER	004-005931
TEMPERATURE CONTROL TRANSFORMER: 24VAC	008-000754
PRESSURE GAUGE: MAX 30#	017-001033
PRESSURE GAUGE: MAX 60#	017-008459
BALL VALVE: 1/2" FULL PORT	028-003026
BALL VALVE: 1 1/4" FULL PORT	028-003027
BALL VALVE: 2" FULL PORT	028-005362
VAPOR VALVE: ASCO 1 1/4"	028-003098
VAPOR VALVE: ASCO 2"	028-004623
REPLACEMENT COIL VAPOR VALVE: ASCO 1 1/4" - 2"	014-000852
REPLACEMENT HOUSING KIT VAPOR VALVE: ASCO 1 1/4" - 2"	028-005508
REPLACEMENT DIAPHRAGM KIT VAPOR VALVE: ASCO 1 1/4"	028-005145
REPLACEMENT DIAPHRAGM KIT VAPOR VALVE: ASCO 2"	028-005296
MANUAL SHUTOFF VALVE: MAXON 1 1/4"	028-001309
REPLACEMENT COIL MANUAL SHUTOFF VALVE: MAXON 1 1/4"	014-000853
MANUAL SHUTOFF VALVE: MAXON 2"	028-001311
REPLACEMENT COIL MANUAL SHUTOFF VALVE: MAXON 2"	014-000854

NOTE: FOR ORIFICE SIZES, MANIFOLD PIPE SIZES, LIQUID PIPE SIZES, VAPOR PIPE SIZES, SOLENOID VALVE SIZES, PARTLOW VALVE SIZES, LIQUID VALVE SIZES AND VAPORIZERS REFER TO CHARTS.

CANADIAN STANDARD ASSEMBLY OR OPTIONAL

MANUAL SHUTOFF VALVE: MAXON 1 1/4" (AUTOMATIC SLOW OPENING)	028-007558
REPLACEMENT COIL MANUAL SHUTOFF VALVE: MAXON 1 1/4"	014-000853
MANUAL SHUTOFF VALVE: MAXON 2" (AUTOMATIC SLOW OPENING)	028-007778
REPLACEMENT COIL MANUAL SHUTOFF VALVE: MAXON 2"	014-000854
SWITCH – HIGH/LOW PRESSURE LIMIT: ASCO	010-007559
PRESSURE TRANSDUCER: 0- 9 PSI – ASCO	010-007736
PRESSURE TRANSDUCER: 4-36 PSI – ASCO	010-007738

AIR AND HEAT SPECIFICATIONS

MODEL	FT	DRYING AIRFLOW CFM	NUMBER OF BURNERS	BTU - MILLION 210 OPERATING TEMP. AMBIENT TEMPERATURE 0°	10°	20°	40°	60°	70°
MSF-31010-CF	10	13435	1	3.05	2.90	2.76	2.47	2.18	2.03
MSF-31010-AB	10	13435	1	3.05	2.90	2.76	2.47	2.18	2.03
MSF-41515-CF	10	19150	1	4.34	4.14	3.93	3.52	3.10	2.90
MSF-41515-AB	10	19150	1	4.34	4.14	3.93	3.52	3.10	2.90
MSF-62520-CF	15	21863	1	4.96	4.72	4.49	4.01	3.54	3.31
MSF-62520-AB	15	21863	1	4.96	4.72	4.49	4.01	3.54	3.31
MSF-72525-CF	15	24804	1	5.63	5.36	5.09	4.55	4.02	3.75
MSF-72525-AB	15	24804	1	5.63	5.36	5.09	4.55	4.02	3.75
DP 2510 1P	10	10077	1	1.96	1.85	1.74	1.52	1.31	1.20
DP 3015 1P	10	14985	1	2.91	2.75	2.59	2.27	1.94	1.78
DP 4020 1P	15	20154	2	3.92	3.70	3.48	3.05	2.61	2.39
DP 5020 1P	20	20154	2	3.92	3.70	3.48	3.05	2.61	2.39
DP 7530 1P	30	30231	3	5.88	5.55	5.22	4.57	3.92	3.59
DP 10040 1P	40	40308	4	7.84	7.40	6.97	6.09	5.22	4.88
DP 3015 3P	10	14985	1	2.91	2.75	2.59	2.27	1.94	1.78
DP 4025 3P	15	20511	1	3.99	3.77	3.54	3.10	2.66	2.44
DP 6030 3P	20	29970	2	5.83	5.50	5.18	4.53	3.88	3.56
DP 7550 3P	25	41022	2	7.97	7.53	7.9	6.20	5.32	4.87
DP 9045 3P	30	44955	3	8.74	8.25	7.77	6.80	5.83	5.34
DP 12060 3P	40	59940	4	11.65	11.00	10.36	9.06	7.77	7.12
DP-SL 3520	10	17808	1	3.46	3.27	3.08	2.70	2.31	2.12
DP-SL 4530	15	22896	1	4.45	4.20	3.96	3.46	2.97	2.72
DP-SL 7040	20	35616	2	6.92	6.54	6.15	5.39	4.62	4.23
DP-SL 8560	25	45792	2	8.90	8.41	7.91	6.92	5.93	5.44
DP-SL 10560	30	53424	3	10.39	9.81	9.23	8.08	6.92	6.35
DP-SL 14080	40	71232	4	13.85	13.08	12.31	10.77	9.23	8.46
DPX 4525	10	20511	1	3.99	3.77	3.54	3.10	2.66	2.44
DPX 7040	15	35616	2	6.92	6.54	6.15	5.39	4.62	4.23
DPX 9050	20	41022	2	7.97	7.53	7.09	6.20	5.32	4.87
DPX 13575	30	61533	3	11.96	11.30	10.63	9.30	7.97	7.31
DPX 180100	40	82044	4	15.95	15.06	14.18	12.41	10.63	9.75

AIR AND HEAT SPECIFICATIONS

MODEL	FT	DRYING AIRFLOW CFM	NUMBER OF BURNERS	BTU - MILLION 210 OPERATING TEMP. AMBIENT TEMPERATURE 0°	10°	20°	40°	60°	70°
DPX-SL 5030	10	22896	1	4.45	4.20	3.96	3.46	2.97	2.72
DPX-SL 8050	15	41022	2	7.97	7.53	7.09	6.20	5.32	4.87
DPX-SL 10060	20	45792	2	8.90	8.41	7.91	6.92	5.93	5.44
DPX-SL 12560	25	57876	2	11.25	10.63	10.00	8.75	7.50	6.88
DPX-SL 15090	30	68688	3	13.35	12.61	11.87	10.39	8.90	8.16
DPX-SL 200120	40	91584	4	17.80	16.81	15.83	13.85	11.87	10.88
DPX4T 5630	10	28938	1	5.63	5.31	5.00	4.38	3.75	3.44
DPX4T 8460	15	44043	1	8.56	8.09	7.61	6.66	5.71	5.23
DPX4T 11260	20	57876	2	11.25	10.63	10.00	8.75	7.50	6.88
DPX4T 140100	25	79500	2	15.45	14.60	13.74	12.02	10.30	9.44
DPX4T 16890	30	86814	3	16.88	15.94	15.00	13.13	11.25	10.31
DPX4T 224120	40	115752	4	22.50	21.25	20.00	17.50	15.00	13.75
DPX8T 6440	10	34201	1	6.65	6.28	5.91	5.17	4.43	4.06
DPX8T 9660	15	N/A							
DPX8T 12880	20	68402	2	13.30	12.56	11.82	10.34	8.86	8.13
DPX8T 160120	25	88036	2	17.11	16.16	15.21	13.31	11.41	10.46
DPX8T 192120	30	102603	3	19.95	18.84	17.73	15.51	13.30	12.19
DPX8T 256160	40	136804	4	26.60	25.12	23.64	20.68	17.73	16.25
DPX12T 7250	10	39750	1	7.73	7.30	6.87	6.01	5.15	4.72
DPX12T 10860	15	57876	2	11.25	10.63	10.00	8.75	7.50	6.88
DPX12T 144100	20	79500	2	15.46	14.60	13.74	12.02	10.30	9.45
DPX12T 175120	25	88086	2	17.12	16.17	15.22	13.32	11.42	10.47
DPX12T 216150	30	119250	3	23.18	21.89	20.61	18.03	15.46	14.17
DPX12T 288200	40	159000	4	30.91	29.19	27.48	24.04	20.61	18.89

FUEL TRAIN VAPORIZER *ROUND* PIPE SIZES

MODEL	FT	L.P. LIQUID VALVES & PIPE	L.P. VAPORIZER SIZES *ROUND*	L.P. VAPOR REGULATOR, VALVES & PIPE	MANIFOLD SOLENOID VALVE & PIPE	MANIFOLD PARTLOW VALVE
MSF-31010-CF	10	1/2	24 1/2"	1/2	1 1/4	1 1/4
MSF-31010-AB	10	1/2	24 1/2"	1/2	1 1/4	1 1/4
MSF-41515-CF	10	1/2	24 1/2"	1/2	1 1/4	1 1/4
MSF-41515-AB	10	1/2	24 1/2"	1/2	1 1/4	1 1/4
MSF-62520-CF	15	1/2	24 1/2"	1/2	1 1/4	1 1/4
MSF-62520-AB	15	1/2	24 1/2"	1/2	1 1/4	1 1/4
MSF-72525-CF	15	1/2	24 1/2"	1/2	1 1/4	1 1/4
MSF-72525-AB	15	1/2	24 1/2"	1/2	1 1/4	1 1/4
DP 2510	10	1/2	4R	1/2	1 1/4	1 1/4
DP 3015	10	1/2	4R	1/2	1 1/4	1 1/4
DP 4020	15	1/2	8R	1/2	1 1/4	1 1/4
DP 5020	20	1/2	8R	1/2	1 1/4	1 1/4
DP 7530	30	1/2	12R	1/2	1 1/4	1 1/4
DP 10040	40	3/4	8R/8R	2	2	1 1/4
DP 3015	10	1/2	4R	1/2	1 1/4	1 1/4
DP 4025	15	1/2	8R	1/2	1 1/4	1 1/4
DP 6030	20	1/2	8R	1/2	1 1/4	1 1/4
DP 7550	25	1/2	12R	1/2	1 1/4	1 1/4
DP 9045	30	1/2	12R	1/2	1 1/4	1 1/4
DP 12060	40	3/4	8R/8R	2	2	1 1/4
DP-SL 3520	10	1/2	4R	1/2	1 1/4	1 1/4
DP-SL 4530	15	1/2	8R	1/2	1 1/4	1 1/4
DP-SL 7040	20	1/2	8R	1/2	1 1/4	1 1/4
DP-SL 8560	25	1/2	12R	1/2	1 1/4	1 1/4
DP-SL 10560	30	1/2	12R	1/2	1 1/4	1 1/4
DP-SL 14080	40	3/4	8R/8R	2	2	1 1/4
DPX 4525	10	1/2	8R	1/2	1 1/4	1 1/4
DPX 7040	15	1/2	12R	1/2	1 1/4	1 1/4
DPX 9050	20	1/2	12R	1/2	1 1/4	1 1/4
DPX 13575	30	3/4	8R/8R	2	2	1 1/4
DPX 180100	40	3/4	12R/12R	2	2	2

FUEL TRAIN VAPORIZER *ROUND* PIPE SIZES

MODEL	FT	L.P. LIQUID VALVES & PIPE	L.P. VAPORIZER SIZES *ROUND*	L.P. VAPOR REGULATOR, VALVES & PIPE	MANIFOLD SOLENOID VALVE & PIPE	MANIFOLD PARTLOW VALVE
DPX-SL 5030	10	1/2	8R	1/2	1 1/4	1 1/4
DPX-SL 8050	15	1/2	12R	1/2	1 1/4	1 1/4
DPX-SL 10060	20	1/2	12R	1/2	1 1/4	1 1/4
DPX-SL 12560	25	3/4	8R/8R	2	2	1 1/4
DPX-SL 15090	30	3/4	8R/8R	2	2	1 1/4
DPX-SL 200120	40	3/4	12R/12R	2	2	2
DPX4T 5630	10	1/2	8R	1/2	1 1/4	1 1/4
DPX4T 8460	15	1/2	12R	1/2	1 1/4	1 1/4
DPX4T 11260	20	3/4	8R/8R	2	2	1 1/4
DPX4T 140100	25	3/4	8R/12R	2	2	1 1/4
DPX4T 16890	30	3/4	12R/12R	2	2	2
DPX4T 224120	40	3/4	12R/12R	2	2	2
DPX8T 6440	10	1/2	8R	1/2	1 1/4	1 1/4
DPX8T 9660	15	N/A	-	-	-	-
DPX8T 12880	20	3/4	8R/8R	2	2	1 1/4
DPX8T 160120	25	3/4	8R/12R	2	2	2
DPX8T 192120	30	3/4	12R/12R	2	2	2
DPX8T 256160	40	3/4	8R/12R/12R	2	2	2
DPX12T 7250	10	1/2	12R	1/2	1 1/4	1 1/4
DPX12T 10860	15	3/4	8R/8R	2	2	1 1/4
DPX12T 144100	20	3/4	8R/12R	2	2	1 1/4
DPX12T 175120	25	3/4	8R/12R	2	2	2
DPX12T 216150	30	3/4	8R/8R/12R	2	2	2
DPX12T 288200	40	3/4	12R/12R/12R	2	2	2

LABELS AND DECALS

DECAL: "DELUX" - 12" HIGH - WHITE OR BLUE	018-001078
DECAL: "DELUX" - 6" HIGH - WHITE/BLUE	018-006813
DECAL: "MADE IN THE USA"	018-005521
LABEL: "CAUTION DO NOT ENTER"	018-002407
LABEL: "DANGER HIGH VOLAGE"	018-001070
LABEL: "START-UP PROCEDURE"	018-007949
LABEL: "FACTORY - SALES * SERVICE * PARTS	018-006254
LABEL: "WARNING "STOP"	018-004742
LABEL: "POWER BELT WARNING"	018-004743
LABEL: "WARNING POWER AUGER"	018-004744
LABEL: "CAUTION KEEP HANDS CLEAR"	018-001071
LABEL: "BURNER COVER"	018-003401
LABEL: "EMERGENCY SLIDE GATES"	018-006806
LABEL: "DO NOT WALK ON GARNER (ROOF)"	018-006809
LABEL: "OPEN FRESH AIR DOOR "FULL OPEN"	018-006808
LABEL: "OPEN FRESH AIR DOOR AS NEEDED" NOT LESS THAN.."	018-006807
LABEL: "OPEN FRESH AIR DOOR "FULL OPEN"	018-006808
LABEL: "OPEN FRESH AIR DOOR AS NEEDED" NOT LESS THAN.."	018-006807
LABEL: SERIAL NO. TAG ENGLISH / FRENCH – CANADA	018-007989
LABEL: "FULL LOAD AMPS……"	018-008024

DOOR HANDLES, LATCHES AND HINGES

DOOR HANDLE: LOCKING	- PANEL BOX BRAND: AUSTIN KEY # BP112	040-001476
CAM LATCH: UPPER DOOR	- PANEL BOX	200-004058
CAM LATCH: LOWER DOOR	- PANEL BOX	040-006848
DOOR LATCH: SPRING	- SWITCH PANEL - PANEL BOX	040-002941
DOOR HANDLE: NON-LOCKING	- COOLING CHAMBER	040-004822
CAM LATCH: COOLING CHAMBER		200-006868
DOOR LATCH: PLENUM DOOR		040-002934
HINGE: PLENUM DOOR		043-001507
DOOR LATCH: RECLAIM DOOR		043-001503

MISC. ITEMS

VIEWING WINDOW ASS'Y: WINDOW AND HOLDER	- PLENUM	040-003398
VIEWING WINDOW	- PLENUM	100-006167
VIEWING WINDOW HOLDER	- PLENUM	100-006168

OPTIONAL FEATURES AND UP-DATE KITS

(OPTIONAL FEATURE) EXHAUST AIR COLUMN CONTROLS

SENSOR ONLY: 10FT	006-006148
SENSOR ONLY: 15FT	006-006149
SENSOR ONLY: 20FT	006-006925

(OPTIONAL FEATURE) ALARM KIT

SHUT DOWN ALARM KIT: HORN & LIGHT	035-002865
HORN: 120V	016-001007
LIGHT FIXTURE ASS'Y: 90 DEGREE	016-005975
LIGHT: RED BULB	019-001091

MODEL: _____LENGTH_____FT

SERIAL NO:____-____-____-_____-_____

SHIPPING LIST - GARNER ASSEMBLY - MSF/DP/DPSL MODELS

PARTS LISTED ARE FOR AUGERS W/ 1 1/4" SHAFTS

3P - DENOTES 240V/480V-3P DRYERS

W/ 8" OR W/O 8" INDICATES WITH OR WITHOUT 8" DIA FILLING HOLE

PART NUMBER	PART DESCRIPTION (FT)	3P 10	3P 15	3P 20	3P 25	3P 30	3P 40
400-009208	TOP ASS'Y 10FT W/ONE DOOR W/ 8"	1	-	-	-	-	-
400-009205	TOP ASS'Y 10FT W/ONE DOOR W/O 8"	-	1	1	1	1	1
200-002976	TOP ASS'Y 10FT INTERMEDIATE	-	-	-	1	1	2
200-OO5516	TOP ASS'Y 5FT REAR W/ 8"	-	1	-	1	-	-
200-002978	TOP ASS'Y 10FT REAR W/ 8"	-	-	1	-	1	1
400-007623	GARNER SIDE ASS'Y 5FT - 22"	-	2	-	2	-	-
400-007624	GARNER SIDE ASS'Y 10FT - 22"	2	2	4	4	6	8
100-002599	CROSS STRAP	2	2	4	4	6	8
100-002589	TOP GARNER SIDE STIFFENING BRACKET	2	2	4	4	6	8
100-007641	LADDER SUPPORT BRACKET	1	1	1	1	1	1
100-002852	END PLATE FRONT W/SWITCH	1	1	1	1	1	1
100-006819	END PLATE REAR STANDARD	1	1	1	1	1	-
100-006820	END PLATE REAR W/SWITCH 40FT	-	-	-	-	-	1
400-009196	ASS'Y LOW GRAIN SWITCH (MOTOR END)	1	1	1	1	1	1
400-009197	ASS'Y LOW GRAIN SWITCH (FILL END)	1	1	1	1	1	1
100-006824	AUGER HEAD PLATE FRONT	1	1	1	1	1	1
100-006825	AUGER HEAD PLATE REAR	1	1	1	1	1	1
200-006834	AUGER ONLY 10FT ONLY - 8"	1	-	-	-	-	-
200-006723	AUGER ONLY FRONT 1OFT - 8"	-	1	1	1	1	1
200-006724	AUGER ONLY INTER 10FT - 8"	-	-	-	1	1	2
200-006721	AUGER ONLY REAR 5FT - 8"	-	1	-	1	-	-
200-006720	AUGER ONLY REAR 10FT - 8"	-	-	1	-	1	1
100-006727	AUGER SHAFT 1 1/4" FT-KEYED	1	1	1	1	1	1
100-006726	AUGER SHAFT 1 1/4" INTER	-	1	1	2	2	3
100-006728	AUGER SHAFT 1 1/4" RE-NON-KEYED	1	1	1	1	1	1
040-005324	BOLT HEX 7/16-14UNC X 3"	4	8	8	12	12	16
040-006732	NUT -LOCK 7/16-14UNC	4	8	8	12	12	16
400-006827	AUGER SUPPORT HANGER ASS'Y - 8"	-	1	1	2	2	3

MODEL: _____LENGTH_____FT

SERIAL NO:____-____-____-_____-_____

SHIPPING LIST - GARNER ASSEMBLY - MSF/DP/DPSL MODELS

PARTS LISTED ARE FOR AUGERS W/ 1 1/4" SHAFTS

3P - DENOTES 240V/480V-3P DRYERS

W/ 8" OR W/O 8" INDICATES WITH OR WITHOUT 8" DIA FILLING HOLE

PART NUMBER	PART DESCRIPTION (FT)		3P 10	3P 15	3P 20	3P 25	3P 30	3P 40
200-006992	AUGER TROUGH INTER 10FT - 8"		-	-	1	1	1	2
200-007002	AUGER TROUGH REAR 5FT - 8"		1	1	-	1	-	-
200-006993	AUGER TROUGH REAR 10FT - 8"		-	-	1	-	1	1
200-005388	BELT GUARD		1	1	1	1	1	1
100-003343	BELT GUARD BACK PLATE		1	1	1	1	1	1
049-003364	BELT "B82" 83.3PITCH		1	2	2	2	2	2
056-005370	SHEAVE AUGER 1B18.4		1	-	-	-	-	-
056-005372	SHEAVE AUGER 2B18.4		-	1	1	1	1	1
056-006830	BUSHING QD-SK 1-1/4		1	1	1	1	1	1
056-005371	SHEAVE MOTOR 1B3.4		1	-	-	-	-	-
056-005373	SHEAVE MOTOR 2B3.4		-	1	1	1	1	1
056-005375	BUSHING QD-SH 7/8		1	1	1	-	-	-
056-005376	BUSHING QD-SH 1-1/8		-	-	-	1	1	1
044-001510	AUGER BEARING W/FLANGE 1 1/4"		2	2	2	2	2	2
004-002355	MOTOR 1HP 1750RPM 240/480V-3P	143T 7/8	1	-	-	-	-	-
004-002673	MOTOR 2HP 1750RPM 240/480V-3P	145T 7/8	-	1	1	-	-	-
004-002671	MOTOR 3HP 1750RPM 240/480V-3P	182T 1-1/8	-	-	-	1	1	-
004-002672	MOTOR 5HP 1750RPM 240/480V-3P	184T 1-1/8	-	-	-	-	-	1
100-002486	KEY-MOTOR 1/4" X 1/4" X 1"		1	1	1	1	1	1
100-007397	MOTOR ADAPTER PLATE		1	1	1	-	-	-
100-007396	MOTOR PLATE TOP		1	1	1	1	1	1
100-002855	MOTOR PLATE BOT		1	1	1	1	1	1
040-002739	TCS 5/16-18UNC X 3/4		29	29	29	29	29	29
040-005321	BOLT WHIZ 5/16-18UNC X 3/4		120	150	190	230	300	375
040-001459	NUT WHIZ 5/16-18UNC		120	150	190	230	300	375
040-001483	BOLT WHIZ 3/8 -16UNC X 1		23	25	27	28	32	36
040-001440	BOLT WHIZ 3/8 -16UNC X 1 1/4		4	4	4	4	4	4
040-001460	NUT WHIZ 3/8 -16UNC		27	29	31	32	36	40

MODEL: _____LENGTH_____FT

SERIAL NO:____-____-____-_____-_____

SHIPPING LIST - GARNER ASSEMBLY - MSF/DP/DPSL MODELS

PARTS LISTED ARE FOR AUGERS W/ 1 1/4" SHAFTS

3P - DENOTES 380V-3P DRYERS

W/ 8" OR W/O 8" INDICATES WITH OR WITHOUT 8" DIA FILLING HOLE

PART NUMBER	PART DESCRIPTION (FT)	3P 10	3P 15	3P 20	3P 25	3P 30	3P 40
400-009208	TOP ASS'Y 10FT W/ONE DOOR W/ 8"	1	-	-	-	-	-
400-009205	TOP ASS'Y 10FT W/ONE DOOR W/O 8"	-	1	1	1	1	1
200-002976	TOP ASS'Y 10FT INTERMEDIATE	-	-	-	1	1	2
200-OO5516	TOP ASS'Y 5FT REAR W/ 8"	-	1	-	1	-	-
200-002978	TOP ASS'Y 10FT REAR W/ 8"	-	-	1	-	1	1
400-007623	GARNER SIDE ASS'Y 5FT - 22"	-	2	-	2	-	-
400-007624	GARNER SIDE ASS'Y 10FT - 22"	2	2	4	4	6	8
100-002599	CROSS STRAP	2	2	4	4	6	8
100-002589	TOP GARNER SIDE STIFFENING BRACKET	2	2	4	4	6	8
100-007641	LADDER SUPPORT BRACKET	1	1	1	1	1	1
100-002852	END PLATE FRONT W/SWITCH	1	1	1	1	1	1
100-006819	END PLATE REAR STANDARD	1	1	1	1	1	-
100-006820	END PLATE REAR W/SWITCH 40FT	-	-	-	-	-	1
400-009196	ASS'Y LOW GRAIN SWITCH (MOTOR END)	1	1	1	1	1	2
400-009197	ASS'Y LOW GRAIN SWITCH (FILL END)	1	1	1	1	1	2
100-006824	AUGER HEAD PLATE FRONT	1	1	1	1	1	1
100-006825	AUGER HEAD PLATE REAR	1	1	1	1	1	1
200-006834	AUGER ONLY 10FT ONLY - 8"	1	-	-	-	-	-
200-006723	AUGER ONLY FRONT 1OFT - 8"	-	1	1	1	1	1
200-006724	AUGER ONLY INTER 10FT - 8"	-	-	-	1	1	2
200-006721	AUGER ONLY REAR 5FT - 8"	-	1	-	1	-	-
200-006720	AUGER ONLY REAR 10FT - 8"	-	-	1	-	1	1
100-006727	AUGER SHAFT 1 1/4" FT-KEYED	1	1	1	1	1	1
100-006726	AUGER SHAFT 1 1/4" INTER	-	1	1	2	2	3
100-006728	AUGER SHAFT 1 1/4" RE-NON-KEYED	1	1	1	1	1	1
040-005324	BOLT HEX 7/16-14UNC X 3"	4	8	8	12	12	16
040-006732	NUT -LOCK 7/16-14UNC	4	8	8	12	12	16
400-006827	AUGER SUPPORT HANGER ASS'Y - 8"	-	1	1	2	2	3

MODEL: _____LENGTH_____FT

SERIAL NO:____-____-____-_____-_____

SHIPPING LIST - GARNER ASSEMBLY - MSF/DP/DPSL MODELS

PARTS LISTED ARE FOR AUGERS W/ 1 1/4" SHAFTS

3P - DENOTES 380V-3P DRYERS

W/ 8" OR W/O 8" INDICATES WITH OR WITHOUT 8" DIA FILLING HOLE

PART NUMBER	PART DESCRIPTION (FT)	3P 10	3P 15	3P 20	3P 25	3P 30	3P 40
200-006992	AUGER TROUGH INTER 10FT - 8"	-	-	1	1	1	2
200-007002	AUGER TROUGH REAR 5FT - 8"	1	1	-	1	-	-
200-006993	AUGER TROUGH REAR 10FT - 8"	-	-	1	-	1	1
200-005388	BELT GUARD	1	1	1	1	1	1
100-003343	BELT GUARD BACK PLATE	1	1	1	1	1	1
049-007874	BELT "B76" 77.8PITCH	1	2	2	2	2	2
056-007871	SHEAVE AUGER 1B15.4	1	-	-	-	-	-
056-007872	SHEAVE AUGER 2B15.4	-	1	1	1	1	1
056-006830	BUSHING QD-SK 1-1/4	1	1	1	1	1	1
056-005371	SHEAVE MOTOR 1B3.4	1	-	-	-	-	-
056-005373	SHEAVE MOTOR 2B3.4	-	1	1	1	1	1
056-005375	BUSHING QD-SH 7/8	1	1	1	-	-	-
056-005376	BUSHING QD-SH 1-1/8	-	-	-	1	1	1
044-001510	AUGER BEARING W/FLANGE 1 1/4"	2	2	2	2	2	2
004-007853	MOTOR 1HP 1450RPM 380V-3P 143T 7/8	1	-	-	-	-	-
004-007854	MOTOR 2HP 1450RPM 380V-3P 145T 7/8	-	1	1	-	-	-
004-007855	MOTOR 3HP 1450RPM 380V-3P 182T 1-1/8	-	-	-	1	1	-
004-007629	MOTOR 5HP 1450RPM 380V-3P 184T 1-1/8	-	-	-	-	-	1
100-002486	KEY-MOTOR 1/4" X 1/4" X 1"	1	1	1	1	1	1
100-007397	MOTOR ADAPTER PLATE	1	1	1	-	-	-
100-007396	MOTOR PLATE TOP	1	1	1	1	1	1
100-002855	MOTOR PLATE BOT	1	1	1	1	1	1
040-002739	TCS 5/16-18UNC X 3/4	29	29	29	29	29	29
040-005321	BOLT WHIZ 5/16-18UNC X 3/4	120	150	190	230	300	375
040-001459	NUT WHIZ 5/16-18UNC	120	150	190	230	300	375
040-001483	BOLT WHIZ 3/8 -16UNC X 1	23	25	27	28	32	36
040-001440	BOLT WHIZ 3/8 -16UNC X 1 1/4	4	4	4	4	4	4
040-001460	NUT WHIZ 3/8 -16UNC	27	29	31	32	36	40

MODEL: _____LENGTH_____FT

SERIAL NO:____-____-____-_____-_____

SHIPPING LIST - GARNER ASSEMBLY – MSF/DP MODELS

PARTS LISTED ARE FOR AUGERS W/ 1 1/4" SHAFTS

1P - DENOTES 230V-1P DRYERS

W/ 8" OR W/O 8" INDICATES WITH OR WITHOUT 8" DIA FILLING HOLE

PART NUMBER	PART DESCRIPTION	1P (FT)10	1P 15	1P 20	1P 30	1P 40
400-009208	TOP ASS'Y 10FT W/ONE DOOR W/ 8"	1	-	-	-	-
400-009205	TOP ASS'Y 10FT W/ONE DOOR W/O 8"	-	1	1	1	1
200-002976	TOP ASS'Y 10FT INTERMEDIATE	-	-	-	1	2
200-005516	TOP ASS'Y 5FT REAR W/ 8"	-	1	-	-	-
200-002978	TOP ASS'Y 10FT REAR W/ 8"	-	-	1	1	1
400-007623	GARNER SIDE ASS'Y 5FT - 22"	-	2	-	-	-
400-007624	GARNER SIDE ASS'Y 10FT - 22"	2	2	4	6	8
100-002599	CROSS STRAP	2	2	4	6	8
100-002589	TOP GARNER SIDE STIFFENING BRACKET	2	2	4	6	8
100-007641	LADDER SUPPORT BRACKET	1	1	1	1	1
100-002852	END PLATE FRONT W/SWITCH	1	1	1	1	1
100-006819	END PLATE REAR STANDARD	1	1	1	1	-
100-006820	END PLATE REAR W/SWITCH 40FT	-	-	-	-	1
400-009196	ASS'Y LOW GRAIN SWITCH (MOTOR END)	1	1	1	1	1
400-009197	ASS'Y LOW GRAIN SWITCH (FILL END)	-	-	-	-	1
100-006824	AUGER HEAD PLATE FRONT	1	1	1	1	1
100-006825	AUGER HEAD PLATE REAR	1	1	1	1	1
200-006834	AUGER ONLY 10FT ONLY - 8"	1	-	-	-	-
200-006723	AUGER ONLY FRONT 1OFT - 8"	-	1	1	1	1
200-006724	AUGER ONLY INTER 10FT - 8"	-	-	-	1	2
200-006721	AUGER ONLY REAR 5FT - 8"	-	1	-	-	-
200-006720	AUGER ONLY REAR 10FT - 8"	-	-	1	1	1
100-006727	AUGER SHAFT 1 1/4" FT-KEYED	1	1	1	1	1
100-006726	AUGER SHAFT 1 1/4" INTER	-	1	1	2	3
100-006728	AUGER SHAFT 1 1/4" RE-NON-KEYED	1	1	1	1	1
040-005324	BOLT HEX 7/16-14UNC X 3"	4	8	8	12	16
040-006732	NUT -LOCK 7/16-14UNC	4	8	8	12	16
400-006827	AUGER SUPPORT HANGER ASS'Y - 8"	-	1	1	2	3
200-006992	AUGER TROUGH INTER 10FT - 8"	-	-	-	1	2
200-007002	AUGER TROUGH REAR 5FT - 8"	1	1	-	-	-
200-006993	AUGER TROUGH REAR 10FT - 8"	-	-	1	1	1

MODEL: _____LENGTH_____FT

SERIAL NO:____-____-____-_____-_____

SHIPPING LIST - GARNER ASSEMBLY – MSF/DP MODELS

PARTS LISTED ARE FOR AUGERS W/ 1 1/4" SHAFTS

1P - DENOTES 230V-1P DRYERS

W/ 8" OR W/O 8" INDICATES WITH OR WITHOUT 8" DIA FILLING HOLE

PART NUMBER	PART DESCRIPTION	(FT)	1P 10	1P 15	1P 20	1P 30	1P 40
200-005388	BELT GUARD		1	1	1	1	1
100-003343	BELT GUARD BACK PLATE		1	1	1	1	1
049-003364	BELT "B82" 83.3PITCH		1	2	2	2	2
056-005370	SHEAVE AUGER 1B18.4		1	-	-	-	-
056-005372	SHEAVE AUGER 2B18.4		-	1	1	1	1
056-006830	BUSHING QD-SK 1-1/4		1	1	1	1	1
056-005371	SHEAVE MOTOR 1B3.4		1	-	-	-	-
056-005373	SHEAVE MOTOR 2B3.4		-	1	1	1	1
056-005375	BUSHING QD-SH 7/8		1	-	-	-	-
056-005376	BUSHING QD-SH 1-1/8		-	1	1	1	1
044-001510	AUGER BEARING W/FLANGE 1 1/4"		2	2	2	2	2
004-003236	MOTOR 1HP 1750RPM 230V-1P 143T	7/8	1	-	-	-	-
004-007779	MOTOR 2HP 1750RPM 230V-1P 182T	1-1/8	-	1	1	-	-
004-005417	MOTOR 3HP 1750RPM 230V-1P 182T	1-1/8	-	-	-	1	-
004-004869	MOTOR 5HP 1750RPM 230V-1P 184T	1-1/8	-	-	-	-	1
100-002486	KEY-MOTOR 1/4" X 1/4" X 1"		1	1	1	1	1
100-007397	MOTOR ADAPTER PLATE		1	-	-	-	-
100-007396	MOTOR PLATE TOP		1	1	1	1	1
100-002855	MOTOR PLATE BOT		1	1	1	1	1
040-002739	TCS 5/16-18UNC X 3/4		29	29	29	29	29
040-005321	BOLT WHIZ 5/16-18UNC X 3/4		120	150	190	300	375
040-001459	NUT WHIZ 5/16-18UNC		120	150	190	300	375
040-001483	BOLT WHIZ 3/8 -16UNC X 1		23	25	27	32	36
040-001440	BOLT WHIZ 3/8 -16UNC X 1 1/4		4	4	4	4	4
040-001460	NUT WHIZ 3/8 -16UNC		27	29	31	36	40

MODEL: _____LENGTH_____FT

SERIAL NO:____-____-____-_____-_____

SHIPPING LIST - GARNER ASSEMBLY - MSF/DP/DPSL MODELS

PARTS LISTED ARE FOR AUGERS W/ 1 1/4" SHAFTS

3P - DENOTES 575V-3P DRYERS

W/ 8" OR W/O 8" INDICATES WITH OR WITHOUT 8" DIA FILLING HOLE

PART NUMBER	PART DESCRIPTION (FT)	3P 10	3P 15	3P 20	3P 25	3P 30	3P 40
400-009208	TOP ASS'Y 10FT W/ONE DOOR W/ 8"	1	-	-	-	-	-
400-009205	TOP ASS'Y 10FT W/ONE DOOR W/O 8"	-	1	1	1	1	1
200-002976	TOP ASS'Y 10FT INTERMEDIATE	-	-	-	1	1	2
200-OO5516	TOP ASS'Y 5FT REAR W/ 8"	-	1	-	1	-	-
200-002978	TOP ASS'Y 10FT REAR W/ 8"	-	-	1	-	1	1
400-007623	GARNER SIDE ASS'Y 5FT - 22"	-	2	-	2	-	-
400-007624	GARNER SIDE ASS'Y 10FT - 22"	2	2	4	4	6	8
100-002599	CROSS STRAP	2	2	4	4	6	8
100-002589	TOP GARNER SIDE STIFFENING BRACKET	2	2	4	4	6	8
100-007641	LADDER SUPPORT BRACKET	1	1	1	1	1	1
100-002852	END PLATE FRONT W/SWITCH	1	1	1	1	1	1
100-006819	END PLATE REAR STANDARD	1	1	1	1	1	-
100-006820	END PLATE REAR W/SWITCH 40FT	-	-	-	-	-	1
400-009196	ASS'Y LOW GRAIN SWITCH (MOTOR END)	1	1	1	1	1	2
400-009197	ASS'Y LOW GRAIN SWITCH (FILL END)	-	-	-	-	-	1
100-006824	AUGER HEAD PLATE FRONT	1	1	1	1	1	1
100-006825	AUGER HEAD PLATE REAR	1	1	1	1	1	1
200-006834	AUGER ONLY 10FT ONLY - 8"	1	-	-	-	-	-
200-006723	AUGER ONLY FRONT 1OFT - 8"	-	1	1	1	1	1
200-006724	AUGER ONLY INTER 10FT - 8"	-	-	-	1	1	2
200-006721	AUGER ONLY REAR 5FT - 8"	-	1	-	1	-	-
200-006720	AUGER ONLY REAR 10FT - 8"	-	-	1	-	1	1
100-006727	AUGER SHAFT 1 1/4" FT-KEYED	1	1	1	1	1	1
100-006726	AUGER SHAFT 1 1/4" INTER	-	1	1	2	2	3
100-006728	AUGER SHAFT 1 1/4" RE-NON-KEYED	1	1	1	1	1	1
040-005324	BOLT HEX 7/16-14UNC X 3"	4	8	8	12	12	16
040-006732	NUT -LOCK 7/16-14UNC	4	8	8	12	12	16
400-006827	AUGER SUPPORT HANGER ASS'Y - 8"	-	1	1	2	2	3

MODEL: _____LENGTH_____FT

SERIAL NO:____-____-____-_____-_____

SHIPPING LIST - GARNER ASSEMBLY - MSF/DP/DPSL MODELS

PARTS LISTED ARE FOR AUGERS W/ 1 1/4" SHAFTS

3P - DENOTES 575V-3P DRYERS

W/ 8" OR W/O 8" INDICATES WITH OR WITHOUT 8" DIA FILLING HOLE

PART NUMBER	PART DESCRIPTION (FT)	3P 10	3P 15	3P 20	3P 25	3P 30	3P 40
200-006992	AUGER TROUGH INTER 10FT - 8"	-	-	1	1	1	2
200-007002	AUGER TROUGH REAR 5FT - 8"	1	1	-	1	-	-
200-006993	AUGER TROUGH REAR 10FT - 8"	-	-	1	-	1	1
200-005388	BELT GUARD	1	1	1	1	1	1
100-003343	BELT GUARD BACK PLATE	1	1	1	1	1	1
049-003364	BELT "B82" 83.3PITCH	1	2	2	2	2	2
056-005370	SHEAVE AUGER 1B18.4	1	-	-	-	-	-
056-005372	SHEAVE AUGER 2B18.4	-	1	1	1	1	1
056-006830	BUSHING QD-SK 1-1/4	1	1	1	1	1	1
056-005371	SHEAVE MOTOR 1B3.4	1	-	-	-	-	-
056-005373	SHEAVE MOTOR 2B3.4	-	1	1	1	1	1
056-005375	BUSHING QD-SH 7/8	1	1	1	-	-	-
056-005376	BUSHING QD-SH 1-1/8	-	-	-	1	1	1
044-001510	AUGER BEARING W/FLANGE 1 1/4"	2	2	2	2	2	2
004-007630	MOTOR 1HP 1750RPM 575V-3P 143T 7/8	1	-	-	-	-	-
004-007425	MOTOR 2HP 1750RPM 575V-3P 145T 7/8	-	1	1	-	-	-
004-007615	MOTOR 3HP 1750RPM 575V-3P 182T 1-1/8	-	-	-	1	1	-
004-007629	MOTOR 5HP 1750RPM 575V-3P 184T 1-1/8	-	-	-	-	-	1
100-002486	KEY-MOTOR 1/4" X 1/4" X 1"	1	1	1	1	1	1
100-007397	MOTOR ADAPTER PLATE	1	1	1	-	-	-
100-007396	MOTOR PLATE TOP	1	1	1	1	1	1
100-002855	MOTOR PLATE BOT	1	1	1	1	1	1
040-002739	TCS 5/16-18UNC X 3/4	29	29	29	29	29	29
040-005321	BOLT WHIZ 5/16-18UNC X 3/4	120	150	190	230	300	375
040-001459	NUT WHIZ 5/16-18UNC	120	150	190	230	300	375
040-001483	BOLT WHIZ 3/8 -16UNC X 1	23	25	27	28	32	36
040-001440	BOLT WHIZ 3/8 -16UNC X 1 1/4	4	4	4	4	4	4
040-001460	NUT WHIZ 3/8 -16UNC	27	29	31	32	36	40

HANDRAIL PIPE FOR WALKWAYS

MAT'L P/N: 027-001293 PIPE 1 1/4" GALV.

PART NUMBER	LENGTH	
100-006357	11"	
100-000124	12"	1'
100-006358	14"	1' 2"
100-007233	16 3/4"	1' 4 3/4"
100-002947	17"	1' 5"
100-002918	18"	1' 6"
100-008479	18 1/2"	1′ 6 1/2"
100-002435	19"	1' 7"
100-002436	21 3/4"	1' 9 3/4"
100-008621	23 1/2"	1′ 11 1/2"
100-006354	23 3/4"	1' 11 3/4"
100-002731	24 1/4"	2' 1/4"
100-000123	25"	2' 1"
100-002917	26 1/4"	2' 2 1/4"
100-008480	27 1/2"	2′ 3 1/2"
100-006359	30"	2' 6"
100-007960	30" 1/2"	2' 6 1/2"
100-007961	36"	3'
100-006209	36 5/8"	3' 5/8"
100-000122	38"	3' 2"
100-002732 (W/HOLE)	38"	3' 2"
100-007232	41 13/16"	3' 5 13/16"
100-002438	42 5/8"	3' 6 5/8"
100-002919	42 13/16"	3' 6 13/16"
100-006814	44"	3' 8"
100-008620	45″	3′ 9″
100-006355	45 1/2"	3' 9 1/2"
100-005750	46"	3' 10"
100-008481	54″	4′ 6″
100-002730	57 3/4"	4' 9 3/4"
100-006360	58"	4' 10"
100-007962	58 1/16"	4' 10 1/16"
100-000119	58 1/4"	4' 10 1/4"
100-008484	58 1/2"	4′ 10 1/2"
100-008485	59 1/2"	4′ 11 1/2"
100-000403	60"	5'
100-002440	60 1/2"	5' 1/2"
100-006361	61"	5' 1"
100-007963	61" 1/2"	5' 1" 1/2"
100-002446	61 13/16"	5' 1 13/16"
100-006350	62 1/4"	5' 2 1/4"
100-005749	64 1/16"	5′ 4 1/16"
100-008486	67″	5′ 7″
100-000121	69"	5' 9"

HANDRAIL PIPE FOR WALKWAYS

MAT'L P/N: 027-001293 PIPE 1 1/4" GALV.

PART NUMBER	LENGTH	
100-000120	70"	5" 10"
100-002447	81 1/8"	6' 9 1/8"
100-003786	82 5/8"	6' 10 5/8"
100-006362	91"	7' 7"
100-006815	92"	7' 8"
100-000402	120"	10'
100-002444	121 7/8"	10' 1 7/8"
100-007964	121 9/16"	10' 1 9/16'
100-003217	130"	10' 10"
100-006210	133 1/2"	11' 1 1/2"
100-007965	135"	11' 3"
100-002443	141 3/16"	11' 9 3/16"
100-007231	145 3/8"	12' 1 3/8"
100-002442	147"	12' 3"
100-007966	150 5/8"	12' 6 5/8"
100-006364	151"	12' 7"
100-002448	163 3/4"	13' 7 3/4"
100-002456	165 1/2"	13' 9 1/2"
100-003787	168 5/8"	14' 10 5/8"
100-000118	180"	15'
100-003796	182"	15' 2"
100-002455	187"	15' 7"
100-003218	190"	15' 10"
100-003795	203 5/16"	16' 11 5/16"
100-007967	216 3/16"	18' 3/16"
100-006211	217 13/16"	18' 1 13/16"
100-002445	223 13/16"	18' 7 13/16"
100-002449	225 9/16"	18' 9 9/16"
100-000193	240"	20'

MODEL: _____LENGTH_____FT

SERIAL NO:____-____-____-_____-_____

SHIPPING LIST - GARNER WALKWAY (FITTINGS AND RAILINGS)

MSF/DP/DPSL MODELS
==========
LOCATED ON EITHER FRONT OR REAR OR BOTH OF DRYER

SHIPPING LIST - PLENUM WALKWAY (FITTINGS AND RAILINGS)

DPX/DPXSL/DPX4T/DPX8T/DPX12T MODELS
==========
LOCATED ON REAR OF DRYER

ITEM	PART NUMBER	DESCRIPTION	QT'Y	SHIP
1.	034-001397	FITTING - ELL	2	[ ]
2.	034-001782	FITTING - TEE	2	[ ]
3.	034-001400	FITTING - S/O TEE	1	[ ]
4.	034-001399	FITTING - S/O ELL	1	[ ]
5.	100-008621	RAILING - 23 ½″	2	[ ]
6.	100-000122	RAILING – 38″	3	[ ]
7.	100-008620	RAILING – 45″	2	[ ]

NOTE: REFER TO DRAWING 400-008618 FOR PART LOCATION

MODEL: _____LENGTH_____FT

SERIAL NO:____-____-____-_____-_____

SHIPPING LIST - GARNER WALKWAY (FITTINGS AND RAILINGS)

DPX/DPXSL/DPX4T/DPX8T/DPX12T MODELS

LOCATED ON BOTH THE FRONT AND REAR OF DRYER

PARTS SHOWN BY QT'Y ARE FOR (ONE)WALKWAY

ITEM	PART NUMBER	DESCRIPTION	QT'Y	SHIP
1.	034-001397	FITTING - ELL	3	[ ]
2.	034-001782	FITTING - TEE	5	[ ]
3.	034-001400	FITTING - S/O TEE	2	[ ]
4.	034-001399	FITTING - S/O ELL	2	[ ]
6.	100-008479	RAILING – 18 1/2"	2	[ ]
7.	100-008480	RAILING - 27 1/2"	2	[ ]
8.	100-000122	RAILING - 38"	5	[ ]
9.	100-008629	RAILING – 42 1/2"	2	[ ]
10.	100-008486	RAILING - 67"	2	[ ]

NOTE: REFER TO DRAWING 400-008624 FOR PART LOCATION

MODEL: _____LENGTH_____FT

SERIAL NO:____-____-____-_____-_____

SHIPPING LIST - GARNER WALKWAY DRYER MASTER (FITTINGS AND RAILINGS)

DP/DPSL/DPX/DPXSL/DPX4T/DPX8T/DPX12T MODELS

LOCATED ON FILLING END OF DRYER - FRONT OR REAR

PARTS SHOWN BY QT'Y ARE FOR (ONE) WALKWAY

ITEM	PART NUMBER	DESCRIPTION	QT'Y	SHIP
1.	034-001397	FITTING - ELL	3	[ ]
2.	034-001782	FITTING - TEE	6	[ ]
3.	034-001400	FITTING - S/O TEE	2	[ ]
4.	034-001399	FITTING - S/O ELL	2	[ ]
5.	034-001398	FITTING - CROSS	1	[ ]
6.	100-008479	RAILING – 18 1/2"	2	[ ]
7.	100-008480	RAILING - 27 1/2"	2	[ ]
8.	100-000122	RAILING - 38"	6	[ ]
9.	100-008481	RAILING - 54"	2	[ ]
10.	100-006350	RAILING – 62 1/4"	2	[ ]
11.	100-008486	RAILING - 67"	2	[ ]

NOTE: REFER TO DRAWING 400-008625 FOR PART LOCATION

MODEL: _____LENGTH_____FT

SERIAL NO:____-____-____-_____-_____

SHIPPING LIST - WALKWAY (FITTINGS AND RAILINGS)

DPX/DPXSL/DPX4T/DPX8T/DPX12T (10FT) MODELS

LOCATED ON BOTH THE RIGHT AND LEFT SIDES OF DRYER

PARTS SHOWN BY QT'Y ARE FOR RIGHT AND LEFT SIDES

ITEM	PART NUMBER	DESCRIPTION	QT'Y	SHIP ▪
1.	034-001397	FITTING - ELL	4	[ ]
2.	034-001782	FITTING - TEE	8	[ ]
3.	034-001400	FITTING - S/O TEE	4	[ ]
4.	034-001399	FITTING - S/O ELL	4	[ ]
5.	034-001398	FITTING - CROSS	4	[ ]
6.	100-006357	RAILING - 11"	4	[ ]
7.	100-008701	RAILING – 14″	4	[ ]
8.	100-006359	RAILING - 30"	4	[ ]
9.	100-000122	RAILING - 38"	12	[ ]
10.	100-006360	RAILING - 58"	2	[ ]
11.	100-008485	RAILING – 59 1/2"	2	[ ]
12.	100-006350	RAILING - 62 1/4"	4	[ ]
13.	100-002215	WALKWAY SUPPORT ANGLE SIDE	6	[ ]
14.	100-006363	WALKWAY SUPPORT ANGLE FRONT & REAR	2	[ ]
15.	040-002193	BOLT 3/8-16UNC X 3/4	16	[ ]
16.	040-001460	NUT 3/8-16UNC	16	[ ]

* WALKWAY IS SHIPPED ONLY PART ASSEMBLED. BRING WALKWAY TO NINETY DEGREES UP FROM DRYER AND INSTALL WALKWAY SUPPORT ANGLES SIDES, FRONT AND REAR FROM DRYER TO WALKWAY, HARDWARE INCLUDED. (USE BOLTS 3/8-16UNC X 3/4).

SEE ILLUSTRATION DRAWING 900-008640 FOR LOCATION OF FITTINGS AND RAILINGS.

MODEL: _____LENGTH_____FT

SERIAL NO:____-____-____-_____-_____

SHIPPING LIST - WALKWAY (FITTINGS AND RAILINGS)

DPX/DPXSL/DPX4T/DPX8T/DPX12T (15FT) MODELS

LOCATED ON BOTH THE RIGHT AND LEFT SIDES OF DRYER

PARTS SHOWN BY QT'Y ARE FOR RIGHT AND LEFT SIDES

ITEM	PART NUMBER	DESCRIPTION	QT'Y	SHIP
1.	034-001397	FITTING - ELL	4	[ ]
2.	034-001782	FITTING - TEE	10	[ ]
3.	034-001400	FITTING - S/O TEE	4	[ ]
4.	034-001399	FITTING - S/O ELL	4	[ ]
5.	034-001398	FITTING - CROSS	6	[ ]
6.	100-006357	RAILING - 11"	4	[ ]
7.	100-008701	RAILING – 14″	4	[ ]
8.	100-006359	RAILING - 30"	4	[ ]
9.	100-000122	RAILING - 38"	14	[ ]
10.	100-006360	RAILING - 58"	4	[ ]
11.	100-008485	RAILING – 59 1/2"	4	[ ]
12.	100-006350	RAILING - 62 1/4"	4	[ ]
13.	100-002215	WALKWAY SUPPORT ANGLE SIDE	8	[ ]
14.	100-006363	WALKWAY SUPPORT ANGLE FRONT & REAR	2	[ ]
15.	040-002193	BOLT 3/8-16UNC X 3/4	20	[ ]
16.	040-001460	NUT 3/8-16UNC	20	[ ]

* WALKWAY IS SHIPPED ONLY PART ASSEMBLED. BRING WALKWAY TO NINETY DEGREES UP FROM DRYER AND INSTALL WALKWAY SUPPORT ANGLES SIDES, FRONT AND REAR FROM DRYER TO WALKWAY, HARDWARE INCLUDED. (USE BOLTS 3/8-16UNC X 3/4).

SEE ILLUSTRATION DRAWING 900-008640 FOR LOCATION OF FITTINGS AND RAILINGS

MODEL: _____LENGTH_____FT

SERIAL NO:____-____-____-_____-_____

SHIPPING LIST - WALKWAY (FITTINGS AND RAILINGS)

DPX/DPXSL/DPX4T/DPX8T/DPX12T (20FT) MODELS

LOCATED ON BOTH THE RIGHT AND LEFT SIDES OF DRYER

PARTS SHOWN BY QT'Y ARE FOR RIGHT AND LEFT SIDES

ITEM	PART NUMBER	DESCRIPTION	QT'Y	SHIP
1.	034-001397	FITTING - ELL	4	[ ]
2.	034-001782	FITTING - TEE	12	[ ]
3.	034-001400	FITTING - S/O TEE	4	[ ]
4.	034-001399	FITTING - S/O ELL	4	[ ]
5.	034-001398	FITTING - CROSS	8	[ ]
6.	100-006357	RAILING - 11"	4	[ ]
7.	100-008701	RAILING – 14″	4	[ ]
8.	100-006359	RAILING - 30"	4	[ ]
9.	100-000122	RAILING - 38"	16	[ ]
10.	100-006360	RAILING - 58"	6	[ ]
11.	100-008485	RAILING – 59 1/2"	6	[ ]
12.	100-006350	RAILING - 62 1/4"	4	[ ]
13.	100-002215	WALKWAY SUPPORT ANGLE SIDE	10	[ ]
14.	100-006363	WALKWAY SUPPORT ANGLE FRONT & REAR	2	[ ]
15.	040-002193	BOLT 3/8-16UNC X 3/4	24	[ ]
16.	040-001460	NUT 3/8-16UNC	24	[ ]

* WALKWAY IS SHIPPED ONLY PART ASSEMBLED. BRING WALKWAY TO NINETY DEGREES UP FROM DRYER AND INSTALL WALKWAY SUPPORT ANGLES SIDES, FRONT AND REAR FROM DRYER TO WALKWAY, HARDWARE INCLUDED. (USE BOLTS 3/8-16UNC X 3/4).

SEE ILLUSTRATION DRAWING 900-008640 FOR LOCATION OF FITTINGS AND RAILINGS.

MODEL: _____LENGTH_____FT

SERIAL NO:____-____-____-_____-_____

SHIPPING LIST - WALKWAY (FITTINGS AND RAILINGS)

DPX/DPXSL/DPX4T/DPX8T/DPX12T (25FT) MODELS

LOCATED ON BOTH THE RIGHT AND LEFT SIDES OF DRYER

PARTS SHOWN BY QT'Y ARE FOR RIGHT AND LEFT SIDES

ITEM	PART NUMBER	DESCRIPTION	QT'Y	SHIP
1.	034-001397	FITTING - ELL	4	[ ]
2.	034-001782	FITTING - TEE	14	[ ]
3.	034-001400	FITTING - S/O TEE	4	[ ]
4.	034-001399	FITTING - S/O ELL	4	[ ]
5.	034-001398	FITTING - CROSS	10	[ ]
6.	100-006357	RAILING - 11"	4	[ ]
7.	100-008701	RAILING – 14″	4	[ ]
8.	100-006359	RAILING - 30"	4	[ ]
9.	100-000122	RAILING - 38"	18	[ ]
10.	100-006360	RAILING - 58"	8	[ ]
11.	100-008485	RAILING – 59 1/2"	8	[ ]
12.	100-006350	RAILING - 62 1/4"	4	[ ]
13.	100-002215	WALKWAY SUPPORT ANGLE SIDE	12	[ ]
14.	100-006363	WALKWAY SUPPORT ANGLE FRONT & REAR	2	[ ]
15.	040-002193	BOLT 3/8-16UNC X 3/4	28	[ ]
16.	040-001460	NUT 3/8-16UNC	28	[ ]

* WALKWAY IS SHIPPED ONLY PART ASSEMBLED. BRING WALKWAY TO NINETY DEGREES UP FROM DRYER AND INSTALL WALKWAY SUPPORT ANGLES SIDES, FRONT AND REAR FROM DRYER TO WALKWAY, HARDWARE INCLUDED. (USE BOLTS 3/8-16UNC X 3/4).

SEE ILLUSTRATION DRAWING 900-008640 FOR LOCATION OF FITTINGS AND RAILINGS

MODEL: _____LENGTH_____FT

SERIAL NO:____-____-____-_____-_____

SHIPPING LIST - WALKWAY (FITTINGS AND RAILINGS)

DPX/DPXSL/DPX4T/DPX8T/DPX12T (30FT) MODELS

LOCATED ON BOTH THE RIGHT AND LEFT SIDES OF DRYER

PARTS SHOWN BY QT'Y ARE FOR RIGHT AND LEFT SIDES

ITEM	PART NUMBER	DESCRIPTION	QT'Y	SHIP
1.	034-001397	FITTING - ELL	4	[ ]
2.	034-001782	FITTING - TEE	16	[ ]
3.	034-001400	FITTING - S/O TEE	4	[ ]
4.	034-001399	FITTING - S/O ELL	4	[ ]
5.	034-001398	FITTING - CROSS	12	[ ]
6.	100-006357	RAILING - 11"	4	[ ]
7.	100-008701	RAILING – 14″	4	[ ]
8.	100-006359	RAILING - 30"	4	[ ]
9.	100-000122	RAILING - 38"	20	[ ]
10.	100-006360	RAILING - 58"	10	[ ]
11.	100-008485	RAILING – 59 1/2"	10	[ ]
12.	100-006350	RAILING - 62 1/4"	4	[ ]
13.	100-002215	WALKWAY SUPPORT ANGLE SIDE	14	[ ]
14.	100-006363	WALKWAY SUPPORT ANGLE FRONT & REAR	2	[ ]
15.	040-002193	BOLT 3/8-16UNC X 3/4	32	[ ]
16.	040-001460	NUT 3/8-16UNC	32	[ ]

* WALKWAY IS SHIPPED ONLY PART ASSEMBLED. BRING WALKWAY TO NINETY DEGREES UP FROM DRYER AND INSTALL WALKWAY SUPPORT ANGLES SIDES, FRONT AND REAR FROM DRYER TO WALKWAY, HARDWARE INCLUDED. (USE BOLTS 3/8-16UNC X 3/4).

SEE ILLUSTRATION DRAWING 900-008640 FOR LOCATION OF FITTINGS AND RAILINGS.

MODEL: _____LENGTH_____FT

SERIAL NO:____-____-____-_____-_____

SHIPPING LIST - WALKWAY (FITTINGS AND RAILINGS)

DPX/DPXSL/DPX4T/DPX8T/DPX12T (40FT) MODELS

LOCATED ON BOTH THE RIGHT AND LEFT SIDES OF DRYER

PARTS SHOWN BY QT'Y ARE FOR RIGHT AND LEFT SIDES

ITEM	PART NUMBER	DESCRIPTION	QT'Y	SHIP
1.	034-001397	FITTING - ELL	4	[ ]
2.	034-001782	FITTING - TEE	20	[ ]
3.	034-001400	FITTING - S/O TEE	4	[ ]
4.	034-001399	FITTING - S/O ELL	4	[ ]
5.	034-001398	FITTING - CROSS	16	[ ]
6.	100-006357	RAILING - 11"	4	[ ]
7.	100-008701	RAILING – 14″	4	[ ]
8.	100-006359	RAILING - 30"	4	[ ]
9.	100-000122	RAILING - 38"	24	[ ]
10.	100-006360	RAILING - 58"	14	[ ]
11.	100-008485	RAILING – 59 1/2"	14	[ ]
12.	100-006350	RAILING - 62 1/4"	4	[ ]
13.	100-002215	WALKWAY SUPPORT ANGLE SIDE	18	[ ]
14.	100-006363	WALKWAY SUPPORT ANGLE FRONT & REAR	2	[ ]
15.	040-002193	BOLT 3/8-16UNC X 3/4	40	[ ]
16.	040-001460	NUT 3/8-16UNC	40	[ ]

* WALKWAY IS SHIPPED ONLY PART ASSEMBLED. BRING WALKWAY TO NINETY DEGREES UP FROM DRYER AND INSTALL WALKWAY SUPPORT ANGLES SIDES, FRONT AND REAR FROM DRYER TO WALKWAY, HARDWARE INCLUDED. (USE BOLTS 3/8-16UNC X 3/4).

SEE ILLUSTRATION DRAWING 900-008640 FOR LOCATION OF FITTINGS AND RAILINGS.

SLGRW45-MSF-DPSL-DPXSL-DPX4-8-12T (10 FT) REV 1

MODEL: _____LENGTH_____FT

SERIAL NO:____-____-____-_____-_____

SHIPPING LIST – TOP ROOF WALKWAY ON 45 SLOPE (FITTINGS AND RAILINGS)

MSF/DP/DPSL/DPX/DPXSL/DPX4T/DPX8T/DPX12T (10FT) MODELS

LOCATED ON ROOF TOP ON 45 DEGREE SLOPE -0N LEFT OR RIGHT SIDE (LEFT SIDE STANDARD)
VIEWING PANEL BOX [] LEFT SIDE [] RIGHT SIDE
MSF-DP/SL WHEN INSTALLED ON RIGHT SIDE A ADDITIONAL LADDER WILL BE REQUIRED AT REAR OF DRYER

PARTS SHOWN BY QT'Y ARE FOR (ONE) WALKWAY ON ONE SIDE

ITEM	PART NUMBER	DESCRIPTION	QT'Y	SHIP
1.	034-001397	FITTING - ELL	3	[ ]
2.	034-001782	FITTING - TEE	6	[ ]
3.	034-001400	FITTING - S/O TEE	2	[ ]
4.	034-001399	FITTING - S/O ELL	2	[ ]
5.	034-001398	FITTING - CROSS	1	[ ]
6.	100-008479	RAILING – 18 1/2"	2	[ ]
7.	100-008480	RAILING - 27 1/2"	2	[ ]
8.	100-008481	RAILING - 54"	1	[ ]
9.	100-008482	RAILING – 55 1/2"	1	[ ]
10.	100-006350	RAILING – 62 1/4"	2	[ ]
11.	100-008486	RAILING – 67″	2	[ ]

*SEE ILLUSTRATION DRAWING 900-008667

SLGRW45-MSF-DPSL-DPXSL-DPX4-8-12T (15FT) REV 1

MODEL: _____LENGTH_____FT

SERIAL NO:____-____-____-_____-_____

SHIPPING LIST – TOP ROOF WALKWAY ON 45 SLOPE (FITTINGS AND RAILINGS)

MSF/DP/DPSL/DPX/DPXSL/DPX4T/DPX8T/DPX12T (15FT) MODELS

LOCATED ON ROOF TOP ON 45 DEGREE SLOPE -0N LEFT OR RIGHT SIDE (LEFT SIDE STANDARD)
VIEWING PANEL BOX [] LEFT SIDE [] RIGHT SIDE
MSF-DP/SL WHEN INSTALLED ON RIGHT SIDE A ADDITIONAL LADDER WILL BE REQUIRED AT REAR OF DRYER

PARTS SHOWN BY QT'Y ARE FOR (ONE) WALKWAY ON ONE SIDE

ITEM	PART NUMBER	DESCRIPTION	QT'Y	SHIP
1.	034-001397	FITTING - ELL	3	[ ]
2.	034-001782	FITTING - TEE	7	[ ]
3.	034-001400	FITTING - S/O TEE	2	[ ]
4.	034-001399	FITTING - S/O ELL	2	[ ]
5.	034-001398	FITTING - CROSS	2	[ ]
6.	100-008479	RAILING – 18 1/2"	2	[ ]
7.	100-008480	RAILING – 27 1/2"	2	[ ]
8.	100-000122	RAILING - 38"	7	[ ]
9.	100-008481	RAILING - 54"	1	[ ]
10.	100-008482	RAILING – 55 1/2"	1	[ ]
11.	100-006360	RAILING – 58	1	[ ]
12.	100-008485	RAILING – 59 1/2"	1	[ ]
13.	100-006350	RAILING – 62 1/4"	2	[ ]
14.	100-008486	RAILING – 67″	2	[ ]

*SEE ILLUSTRATIOM DRAWING 900-008667

SLGRW45-MSF-DPSL-DPXSL-DPX4-8-12T (20FT) REV 1

MODEL: _____LENGTH_____FT

SERIAL NO:____-____-____-_____-_____

SHIPPING LIST – TOP ROOF WALKWAY ON 45 SLOPE (FITTINGS AND RAILINGS)

MSF/DP/DPSL/DPX/DPXSL/DPX4T/DPX8T/DPX12T (20FT) MODELS

LOCATED ON ROOF TOP ON 45 DEGREE SLOPE -0N LEFT OR RIGHT SIDE (LEFT SIDE STANDARD)
VIEWING PANEL BOX [] LEFT SIDE [] RIGHT SIDE
MSF-DP/SL WHEN INSTALLED ON RIGHT SIDE A ADDITIONAL LADDER WILL BE REQUIRED AT REAR OF DRYER

PARTS SHOWN BY QT'Y ARE FOR (ONE) WALKWAY ON ONE SIDE

ITEM	PART NUMBER	DESCRIPTION	QT'Y	SHIP
1.	034-001397	FITTING - ELL	3	[ ]
2.	034-001782	FITTING - TEE	8	[ ]
3.	034-001400	FITTING - S/O TEE	2	[ ]
4.	034-001399	FITTING - S/O ELL	2	[ ]
5.	034-001398	FITTING - CROSS	3	[ ]
6.	100-008479	RAILING – 18 1/2"	2	[ ]
7.	100-008480	RAILING - 27 1/2"	2	[ ]
8.	100-000122	RAILING - 38"	8	[ ]
9.	100-008481	RAILING - 54"	1	[ ]
10.	100-008482	RAILING – 55 1/2"	1	[ ]
11.	100-006360	RAILING – 58	2	[ ]
12.	100-008485	RAILING – 59 1/2"	2	[ ]
13.	100-006350	RAILING – 62 1/4"	2	[ ]
14.	100-008486	RAILING – 67″	2	[ ]

* SEE ILLUSTRATION DRAWING 900-008667

SLGRW45-MSF-DPSL-DPXSL-DPX4-8-12T (25FT) REV 1

MODEL: _____LENGTH_____FT

SERIAL NO:____-____-____-_____-_____

SHIPPING LIST – TOP ROOF WALKWAY ON 45 SLOPE (FITTINGS AND RAILINGS)

MSF/DP/DPSL/DPX/DPXSL/DPX4T/DPX8T/DPX12T (25FT) MODELS

LOCATED ON ROOF TOP ON 45 DEGREE SLOPE -0N LEFT OR RIGHT SIDE (LEFT SIDE STANDARD)
VIEWING PANEL BOX [] LEFT SIDE [] RIGHT SIDE
MSF-DP/SL WHEN INSTALLED ON RIGHT SIDE A ADDITIONAL LADDER WILL BE REQUIRED AT REAR OF DRYER

PARTS SHOWN BY QT'Y ARE FOR (ONE) WALKWAY ON ONE SIDE

ITEM	PART NUMBER	DESCRIPTION	QT'Y	SHIP
1.	034-001397	FITTING - ELL	3	[ ]
2.	034-001782	FITTING - TEE	9	[ ]
3.	034-001400	FITTING - S/O TEE	2	[ ]
4.	034-001399	FITTING - S/O ELL	2	[ ]
5.	034-001398	FITTING - CROSS	4	[ ]
6.	100-008479	RAILING – 18 1/2"	2	[ ]
7.	100-008480	RAILING - 27 1/2"	2	[ ]
8.	100-000122	RAILING - 38"	9	[ ]
9.	100-008481	RAILING - 54"	1	[ ]
10.	100-008482	RAILING – 55 1/2"	1	[ ]
11.	100-006360	RAILING – 58	3	[ ]
12.	100-008485	RAILING – 59 1/2"	3	[ ]
13.	100-006350	RAILING – 62 1/4"	2	[ ]
14.	100-008486	RAILING – 67″	2	[ ]

* SEE ILLUSTRATION DRAWING 900-008667

SLGRW45-MSF-DPSL-DPXSL-DPX4-8-12T (30FT) REV 1

MODEL: _____LENGTH_____FT

SERIAL NO:____-____-____-_____-_____

SHIPPING LIST – TOP ROOF WALKWAY ON 45 SLOPE (FITTINGS AND RAILINGS)

MSF/DP/DPSL/DPX/DPXSL/DPX4T/DPX8T/DPX12T (30FT) MODELS

LOCATED ON ROOF TOP ON 45 DEGREE SLOPE -0N LEFT OR RIGHT SIDE (LEFT SIDE STANDARD)
VIEWING PANEL BOX [] LEFT SIDE [] RIGHT SIDE
MSF-DP/SL WHEN INSTALLED ON RIGHT SIDE A ADDITIONAL LADDER WILL BE REQUIRED AT REAR OF DRYER

PARTS SHOWN BY QT'Y ARE FOR (ONE) WALKWAY ON ONE SIDE

ITEM	PART NUMBER	DESCRIPTION	QT'Y	SHIP
1.	034-001397	FITTING - ELL	3	[ ]
2.	034-001782	FITTING - TEE	10	[ ]
3.	034-001400	FITTING - S/O TEE	2	[ ]
4.	034-001399	FITTING - S/O ELL	2	[ ]
5.	034-001398	FITTING - CROSS	5	[ ]
6.	100-008479	RAILING – 18 1/2"	2	[ ]
7.	100-008480	RAILING - 27 1/2"	2	[ ]
8.	100-000122	RAILING - 38"	10	[ ]
9.	100-008481	RAILING – 54"	1	[ ]
10.	100-008482	RAILING – 55 1/2"	1	[ ]
11.	100-006360	RAILING – 58	4	[ ]
12.	100-008485	RAILING – 59 1/2"	4	[ ]
13.	100-006350	RAILING – 62 1/2"	2	[ ]
14.	100-008486	RAILING – 67″	2	[ ]

* SEE ILLUSTRATION DRAWING 900-008667

SLGRW45-MSF-DPSL-DPXSL-DPX4-8-12T (40FT) REV 1

MODEL: _____LENGTH_____FT

SERIAL NO:____-____-____-_____-_____

SHIPPING LIST – TOP ROOF WALKWAY ON 45 SLOPE (FITTINGS AND RAILINGS)

MSF/DP/DPSL/DPX/DPXSL/DPX4T/DPX8T/DPX12T (40FT) MODELS

LOCATED ON ROOF TOP ON 45 DEGREE SLOPE -0N LEFT OR RIGHT SIDE (LEFT SIDE STANDARD)
VIEWING PANEL BOX [] LEFT SIDE [] RIGHT SIDE
MSF-DP/SL WHEN INSTALLED ON RIGHT SIDE A ADDITIONAL LADDER WILL BE REQUIRED AT REAR OF DRYER

PARTS SHOWN BY QT'Y ARE FOR (ONE) WALKWAY ON ONE SIDE

ITEM	PART NUMBER	DESCRIPTION	QT'Y	SHIP
1.	034-001397	FITTING - ELL	3	[ ]
2.	034-001782	FITTING - TEE	12	[ ]
3.	034-001400	FITTING - S/O TEE	2	[ ]
4.	034-001399	FITTING - S/O ELL	2	[ ]
5.	034-001398	FITTING - CROSS	7	[ ]
6.	100-008479	RAILING – 18 1/2"	2	[ ]
7.	100-008480	RAILING – 27 1/2"	2	[ ]
8.	100-000122	RAILING - 38"	12	[ ]
9.	100-008481	RAILING – 54"	1	[ ]
10.	100-008482	RAILING – 55 1/2"	1	[ ]
11.	100-006360	RAILING – 58	6	[ ]
12.	100-008485	RAILING – 59 1/2"	6	[ ]
13.	100-006350	RAILING – 62 1/2"	2	[ ]
14.	100-008486	RAILING – 67″	2	[ ]

* SEE ILLUSTRATION DRAWING 900-008667

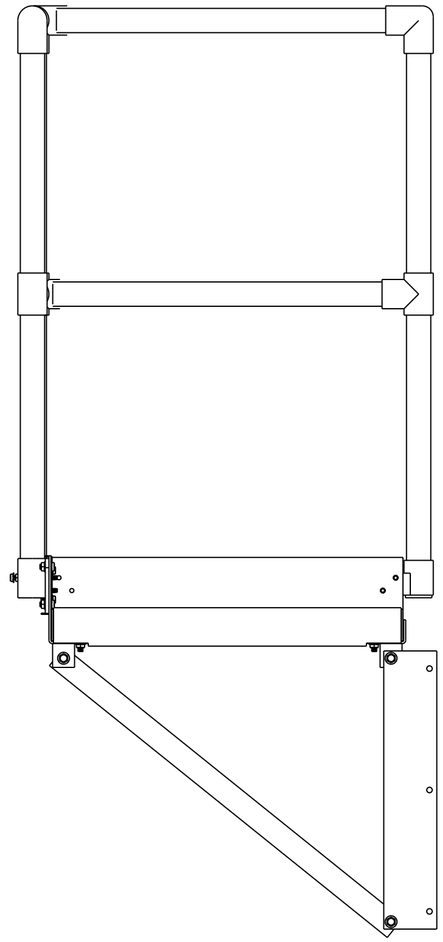

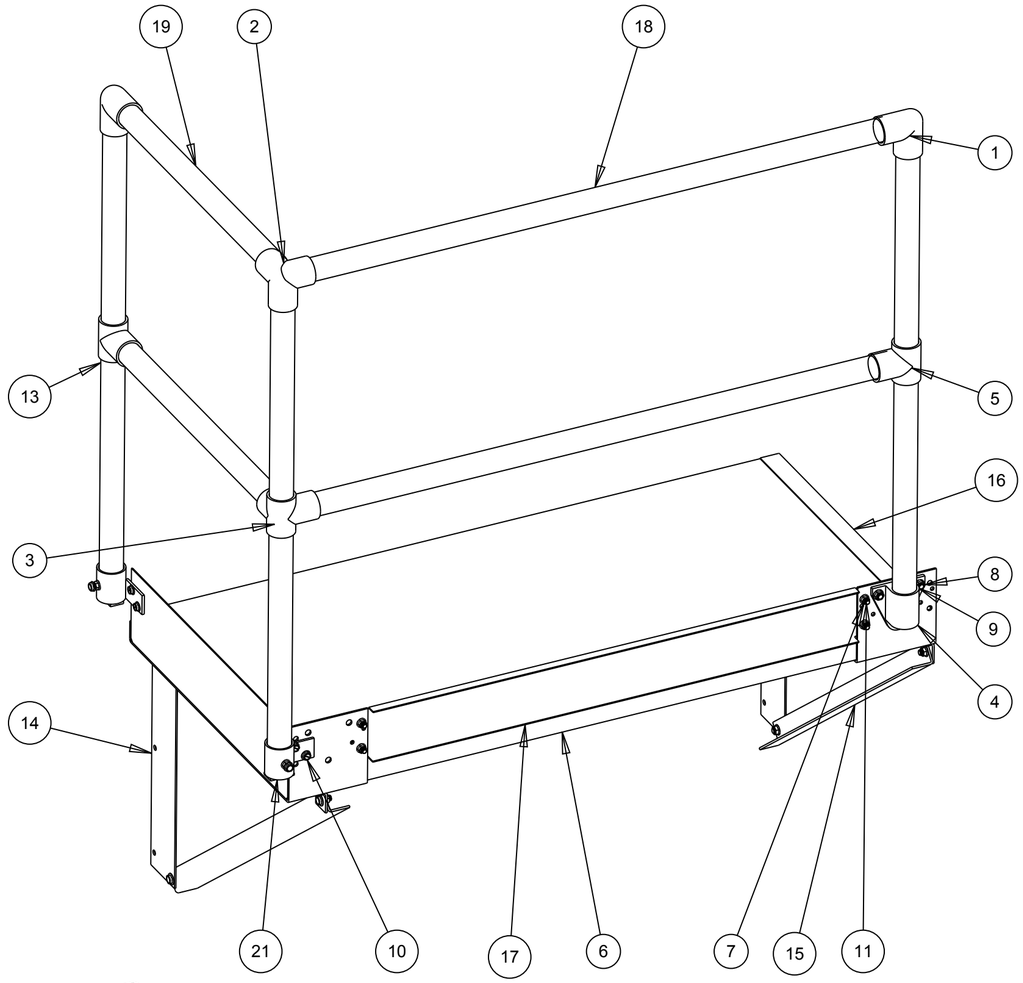

ITEM	PART NUMBER	QTY	DESCRIPTION
1	034-001397	2	PIPE FITTING - ELL
2	034-001399	1	PIPE FITTING - S/O ELBOW
3	034-001400	1	PIPE FITTING - S/O TEE
4	034-001404	1	PIPE FITTING - BASE
5	034-001782	2	PIPE FITTING - TEE
6	038-001412-48000	1	GRIP STRUT - 2" X 24" X 48"
7	040-001459	4	NUT - WHIZ LOCK - 5/16-18UNC
8	040-001460	17	NUT - WHIZ LOCK - 3/8-16UNC
9	040-002193	9	BOLT - WHIZ LOCK - 3/8-16UNC X 3/4
10	040-002739	4	SCREW - TCS - HEX - 5/16-18UNC X 3/4
11	040-005321	4	BOLT - WHIZ LOCK - 5/16-18UNC X 3/4"
12	040-008665	8	BOLT - CARRIAGE - 3/8-18UNC X 1-1/4
13	100-000122	3	PIPE RAILING - 38"
14	100-003133	2	CATWALK SPRT BRKT - ENDWALL
15	100-007345	2	CATWALK ANGLE BRACE - END CATWALK
16	100-007376	1	END COVER - 24" GRIP STRUT
17	100-008617	1	CATWALK TOE GUARD - END CATWALK - GARNER/PLNM
18	100-008620	2	PIPE RAILING - 45"
19	100-008621	2	PIPE RAILING - 23-1/2"
20	100-008623	8	WALKWAY CLAMP
21	200-002274	2	W.A. - HANDRAILING BRACKET - RIGHT
22	200-008493	1	W.A. - CATWALK SPRT BRKT 24" - END CATWALK - TAB RIGHT
23	200-008626	1	W.A. - CATWALK SPRT BRKT 24" - TOE GUARD - TAB MID

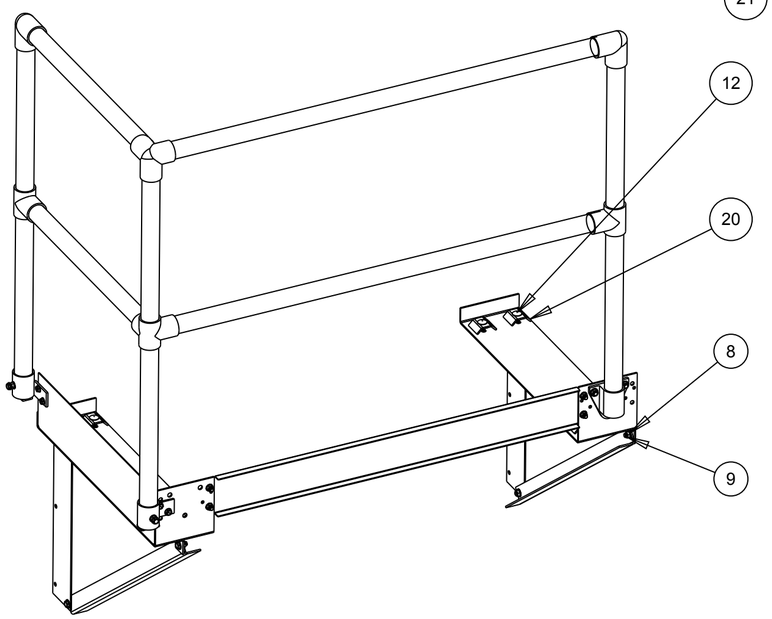

SCALE 0.093
*GRIPSTRUT REMOVED FOR ILLUSTRATION

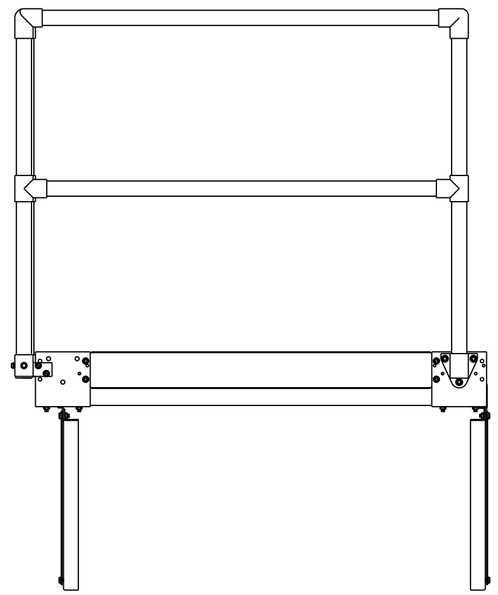

SCALE 0.078

				DRAWN BY	**DELUX MFG. CO.** KEARNEY, NE		TITLE: ASSEMBLY CATWALK & RAILINGS GARNER WALKWAY - DP/DPSL PLENUM WALKWAY - DPX/DPXSL DPX4T-8T-12T
				JGW			
				DATE 09/04/07			
				CHK'D	USED ON:		
					NEXT ASS'Y:		
	A	RE-DRAWN	09/04/07	SCALE .125	MATL.	SHEAR SIZE	DRAWING NO. 400-008618
ECO#	LET	DESCRIPTION	DATE				

TOLERANCE: DECIMAL □ ±.010 FRACTION □ ±1/32 ANGLE □ ±1° UNLESS OTHERWISE SPECIFIED

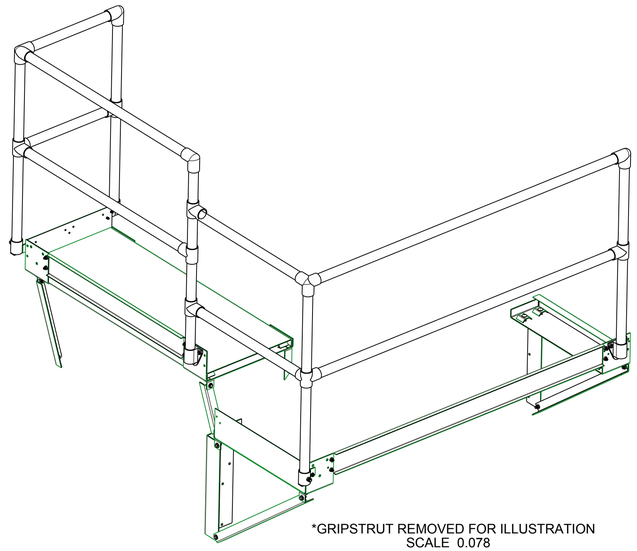

*GRIPSTRUT REMOVED FOR ILLUSTRATION
SCALE 0.078

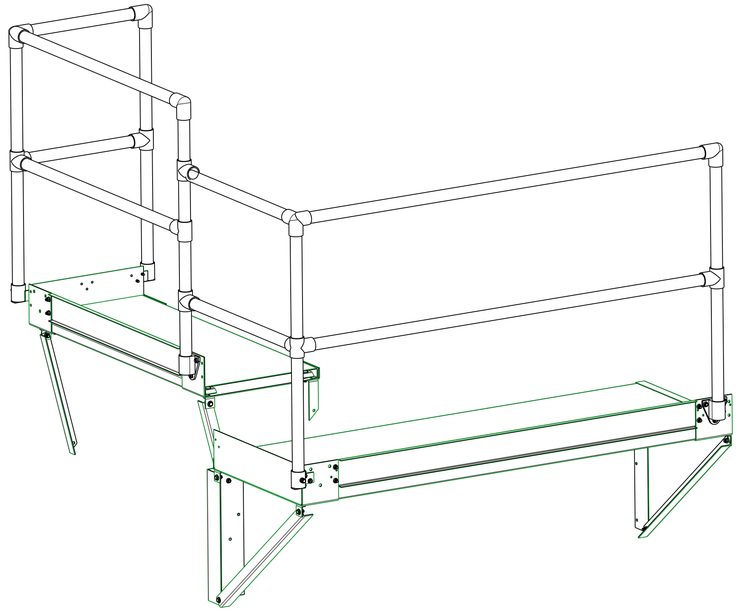

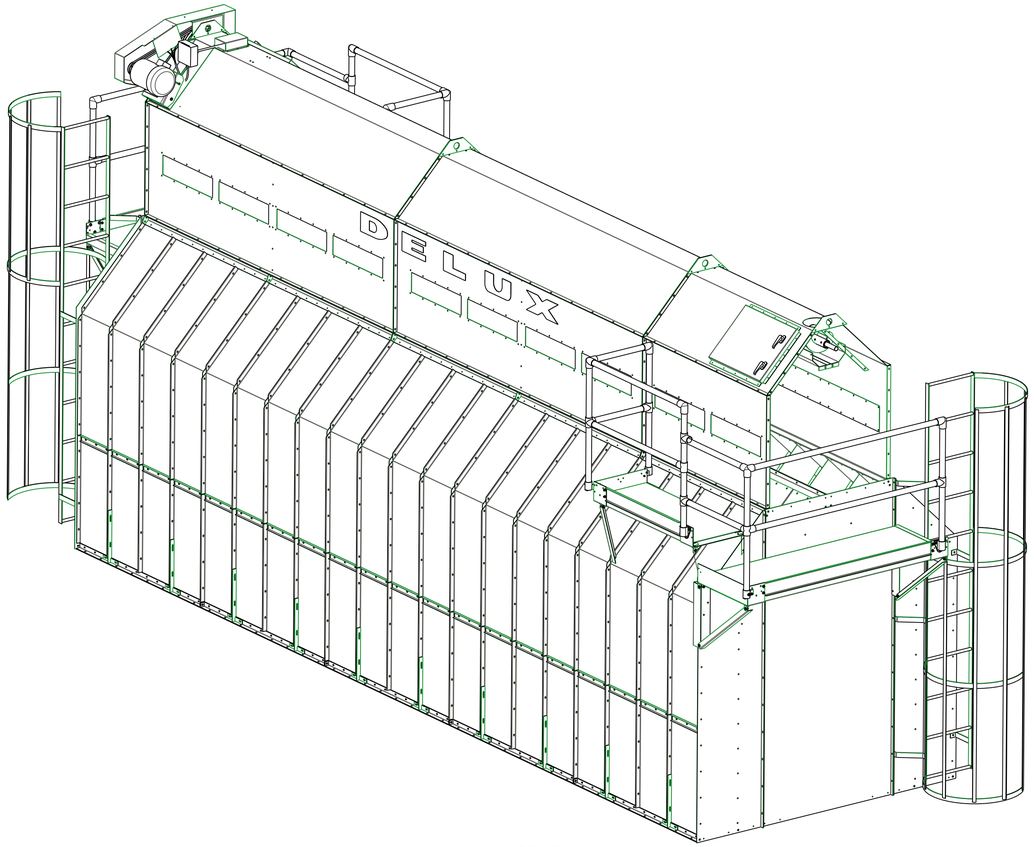

SCALE 0.046

ITEM	PART NUMBER	QTY	DESCRIPTION
1	034-001397	3	PIPE FITTING - ELL
2	034-001399	2	PIPE FITTING - S/O ELBOW
3	034-001400	2	PIPE FITTING - S/O TEE
4	034-001404	2	PIPE FITTING - BASE
5	034-001782	5	PIPE FITTING - TEE
6	038-001411-48000	1	GRIP STRUT - 1-1/2" X 18" X 48"
7	038-001412-71000	1	GRIP STRUT - 2" X 24" X 71"
8	040-001459	9	NUT - WHIZ LOCK - 5/16-18UNC
9	040-001460	30	NUT - WHIZ LOCK - 3/8-16UNC
10	040-002193	14	BOLT - WHIZ LOCK - 3/8-16UNC X 3/4
11	040-002739	6	SCREW - TCS - HEX - 5/16-18UNC X 3/4
12	040-005321	9	BOLT - WHIZ LOCK - 5/16-18UNC X 3/4"
13	040-008665	16	BOLT - CARRIAGE - 3/8-18UNC X 1-1/4
14	100-000122	5	PIPE RAILING - 38"
15	100-003133	1	CATWALK SPRT BRKT - ENDWALL
16	100-005281	1	CATWALK ANGLE BRACE 45- LEFT
17	100-005282	1	CATWALK ANGLE BRACE 45- RIGHT
18	100-007345	2	CATWALK ANGLE BRACE - END CATWALK
19	100-007376	1	END COVER - 24" GRIP STRUT
20	100-008478	1	CATWALK SPRT BRKT - END CATWALK EXT.
21	100-008479	2	PIPE RAILING - 18-1/2"
22	100-008480	2	PIPE RAILING - 27-1/2"
23	100-008486	2	PIPE RAILING - 67"
24	100-008503	1	CATWALK TOE GUARD - END CATWALK EXT.
25	100-008623	16	WALKWAY CLAMP
26	100-008629	2	PIPE RAILING - 42-1/2"
27	100-008630	1	CATWALK TOE GUARD - GARNER PLTFRM
28	200-002274	2	W.A. - HANDRAILING BRACKET - RIGHT
29	200-007387	1	W.A. - HANDRAILING BRACKET - LEFT
30	200-008491	1	W.A. - CATWALK SPRT BRKT 18" - 45 TAB RGHT
31	200-008492	1	W.A. - CATWALK SPRT BRKT 24" - END CTWLK - TOE GRD - TAB LEFT
32	200-008493	1	W.A. - CATWALK SPRT BRKT 24" - END CATWALK - TAB RIGHT
33	200-008622	1	W.A. - CATWALK SPRT BRKT 18" - 45 TOE GRD - TAB MID

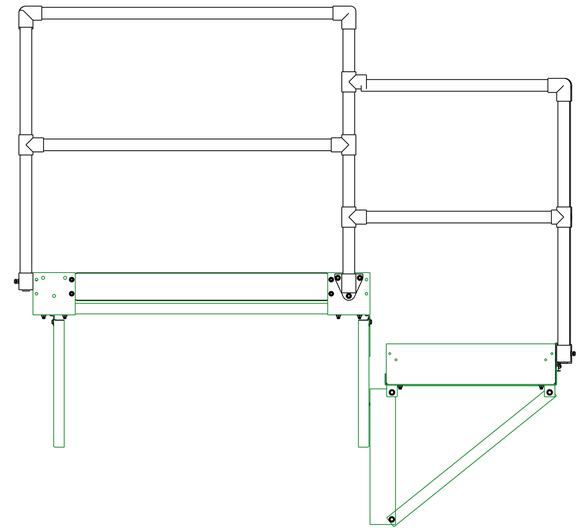

				DRAWN BY	**DELUX MFG. CO.**		TITLE:
				JGW	KEARNEY, NE		ASSEMBLY ILLUSTRATION DRAWING GARNER WALKWAY DPX/DPXSL, DPX4T/8T/12T
				DATE			
				09/05/07			
				CHK'D	USED ON:		
					NEXT ASS'Y:		
	A	REDRAWN	09/05/07	SCALE	MATL.	SHEAR SIZE	DRAWING NO.
ECO#	LET	DESCRIPTION	DATE	.093			400-008624

TOLERANCE: DECIMAL .#10 FRACTION #1/32 ANGLE #° UNLESS OTHERWISE SPECIFIED

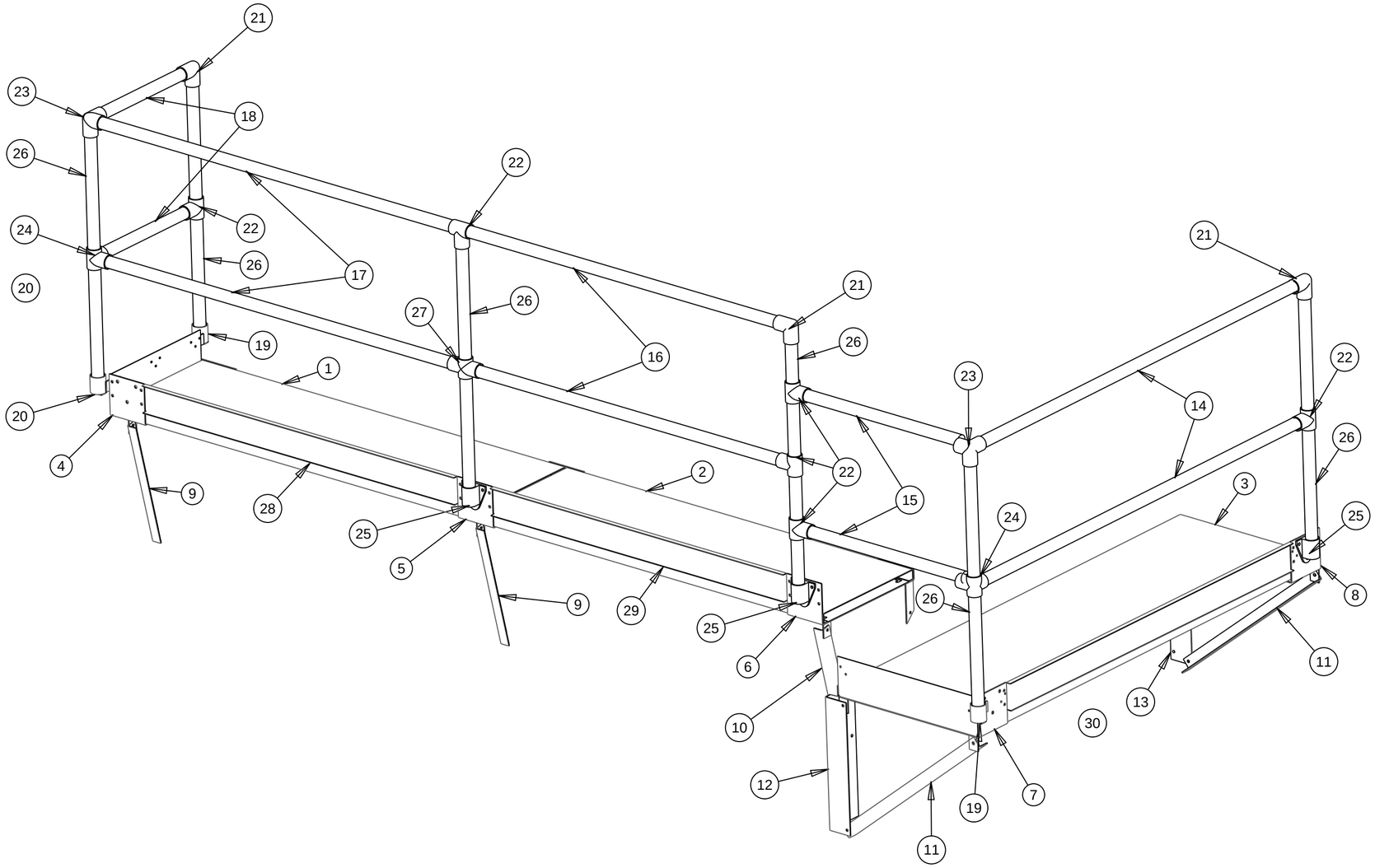

ITEM	PART NUMBER	QTY	DESCRIPTION
1	034-001411	62.5 IN.	GRIP STRUT - 1-1/2" X 18"
2	034-001411	59.5 IN.	GRIP STRUT - 1-1/2" X 18"
3	034-001412	71 IN.	GRIP STRUT - 2" X 24"
4	200-008622	1	CATWALK SPRT BRCKT 18" - 45° TOE GRD - TAB MID
5	200-008490	1	CATWALK SPRT BRCKT 18" - 45" - TAB MID
6	200-008491	1	CATWALK SPRT BRCKT 18" - 45° TAB RGHT
7	200-008492	1	CATWALK SPRT BRCKT 24" - END CATWALK - TOE GRD - TAB LFT
8	200-008493	1	CATWALK SPRT BRCKT 24" - END CATWALK - TAB RGHT
9	100-005281	2	CATWALK ANGLE BRACE 45- LEFT
10	100-005282	1	CATWALK ANGLE BRACE 45- RIGHT
11	100-007345	2	CATWALK ANGLE BRACE - END CATWALK
12	100-008478	1	CATWALK SPRT BRCKT - END CATWALK EXT.
13	100-003133	1	CATWALK SPRT BRCKT - ENDWALL
14	100-008486	2	PIPE RAILING - 67"
15	100-008480	2	PIPE RAILING - 27-1/2"
16	100-008481	2	PIPE RAILING - 54"
17	100-006350	2	PIPE RAILING - 62-1/4"
18	100-008479	2	PIPE RAILING - 14"
19	200-004235	2	PIPE CUP - LEFT
20	200-002274	1	PIPE CUP - RIGHT
21	034-001397	3	PIPE FITTING - ELBOW
22	034-001782	6	PIPE FITTING - TEE
23	034-001399	2	PIPE FITTING - S/O ELBOW
24	034-001400	2	PIPE FITTTING - S/O TEE
25	034-001404	3	PIPE FITTING - BASE
26	100-000122	6	PIPE RAILING - 38"
27	034-001398	1	PIPE FITTING - CROSS
28	100-008496	1	CATWALK TOE GUARD LEFT - 45° SLOPE
29	100-008504	1	CATWALK TOE GUARD RIGHT - 45° SLOPE
30	100-008503	1	CATWALK TOE GUARD - END CATWALK EXT.

ECO#	LET	DESCRIPTION	DATE

DRAWN BY: JGW

DATE: 06/28/06

CHK'D:

SCALE: .078

DELUX MFG. CO.
KEARNEY, NE

USED ON:

NEXT ASS'Y:

MATL.:

SHEAR SIZE:

TITLE:
ASSEMBLY DRAWING
CATWALK & RAILINGS
GARNER WALKWAY
W / DRYER MASTER
DP/DPSL/DPX/DPXSL/DPX4T-8T-12T

DRAWING NO.
400-008625

TOLERANCE: DECIMAL±.010 FRACTION±1/32 ANGLE±1° UNLESS OTHERWISE SPECIFIED

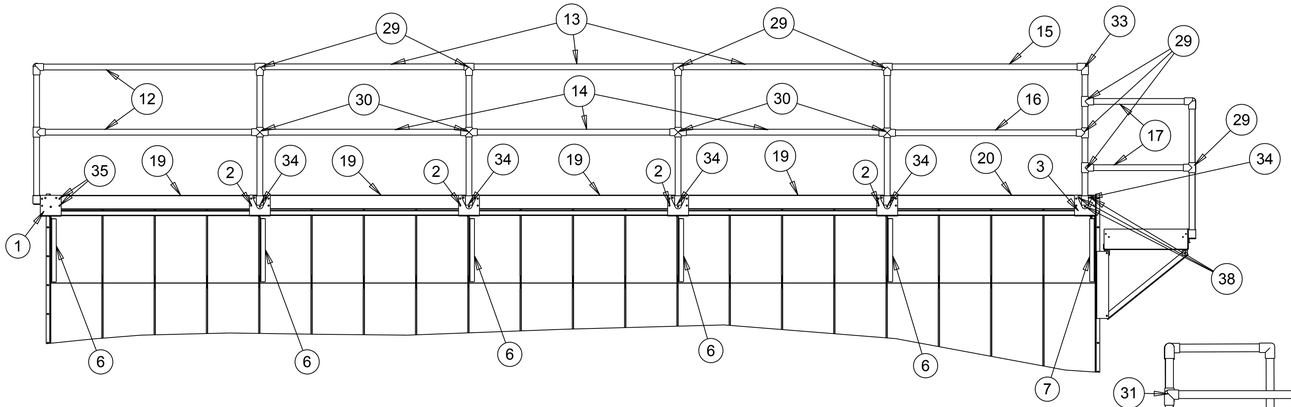

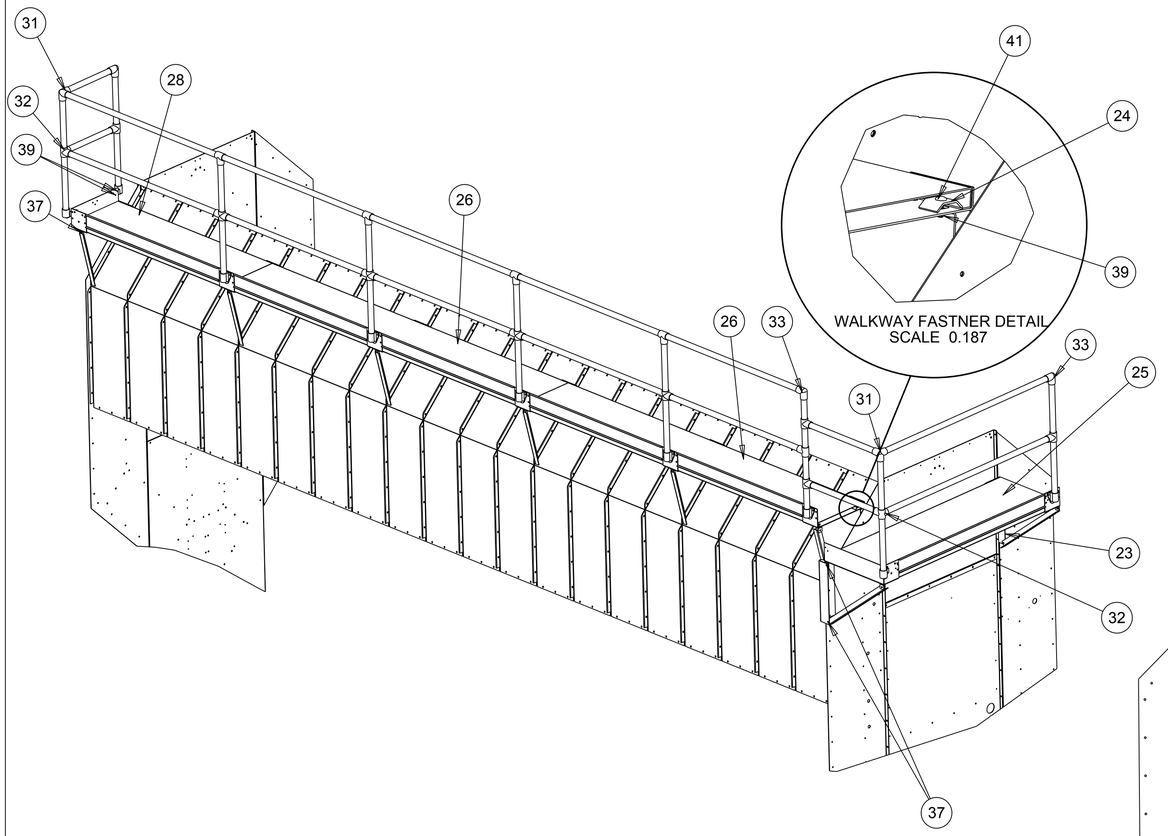

WALKWAY FASTNER DETAIL
SCALE 0.187

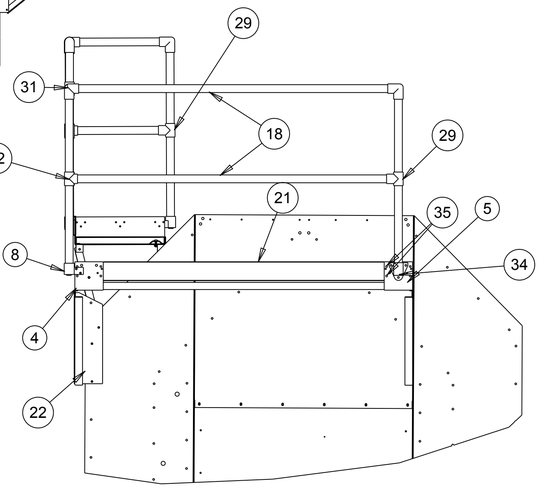

FRONT VIEW
SCALE 0.063

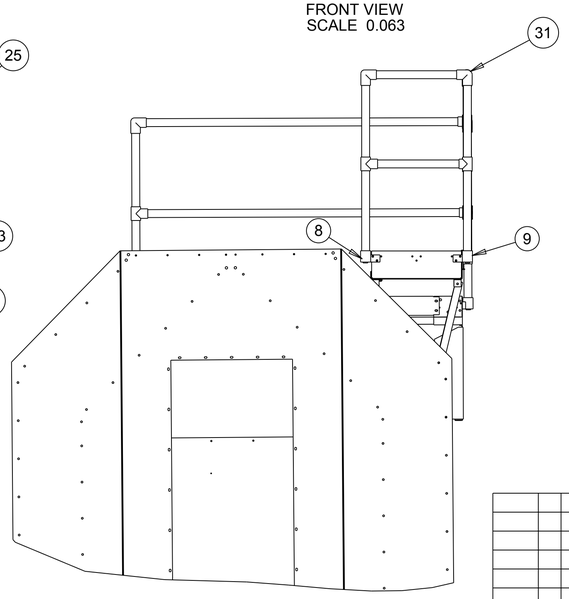

REAR VIEW
SCALE 0.063

ITEM	PART NUMBER	QTY						DESCRIPTION
		10 FT	15FT	20FT	25FT	30FT	40FT	
1	200-008622	1	1	1	1	1	1	CATWALK BRACKET 18" - 45- TOE GRD - TAB MID
2	200-008490	1	2	3	4	5	7	CATWALK BRACKET 18" - 45- INTERMEDIATE - TAB MID
3	200-008491	1	1	1	1	1	1	CATWALK BRACKET 18" - 45- RIGHT - TAB RIGHT
4	200-008492	1	1	1	1	1	1	CATWALK BRACKET 24" - END CATWALK - TOE GRD - TAB LFT
5	200-008493	1	1	1	1	1	1	CATWALK BRACKET 24" - END CATWALK - TAB RIGHT
6*	100-005281	2	3	4	5	6	8	CATWALK ANGLE BRACE 45- LEFT
7*	100-005282	1	1	1	1	1	1	CATWALK ANGLE BRACE 45- RIGHT
8	200-007387	2	2	2	2	2	2	PIPE CUP - LEFT
9	200-002274	1	1	1	1	1	1	PIPE CUP - RIGHT
10	100-008479	2	2	2	2	2	2	PIPE RAILING - 18-1/2"
11	100-000122	6	7	8	9	10	12	PIPE RAILING - 38"
12*	100-006350	2	2	2	2	2	2	PIPE RAILING - 62-1/4"
13*	100-008485	-	1	2	3	4	6	PIPE RAILING - 59-1/2"
14*	100-006360	-	1	2	3	4	6	PIPE RAILING - 58"
15*	100-008482	1	1	1	1	1	1	PIPE RAILING - 55-1/2"
16*	100-008481	1	1	1	1	1	1	PIPE RAILING - 54"
17*	100-008480	2	2	2	2	2	2	PIPE RAILING - 27-1/2"
18*	100-008486	2	2	2	2	2	2	PIPE RAILING - 67"
19	100-008496	1	2	3	4	5	7	CATWALK TOE GUARD - INTERMEDIATE
20	100-008504	1	1	1	1	1	1	CATWALK TOE GUARD - RIGHT - LADDER END
21	100-008503	1	1	1	1	1	1	CATWALK TO GUARD - END CATWALK
22	100-008478	1	1	1	1	1	1	CATWALK SUPPORT BRACKET - END CATWALK - LEFT
23	100-003133	1	1	1	1	1	1	CATWALK SUPPORT BRACKET - END WALL
24	100-008623	20	24	28	32	36	44	WALKWAY CLAMP
25	038-001412	1	1	1	1	1	1	GRIP STRUT - 2" X 24" X 71"
26	038-001411	-	1	1	2	2	3	GRIP STRUT - 1-1/2" X 18" X 120"
27	038-001411	1	-	1	-	1	1	GRIP STRUT - 1-1/2" X 18" X 60"
28	038-001411	1	1	1	1	1	1	GRIP STRUT - 1-1/2" X 18" X 62-1/4"
29*	034-001782	6	7	8	9	10	12	PIPE FITTING - TEE
30*	034-001398	1	2	3	4	5	7	PIPE FITTING - CROSS
31*	034-001399	2	2	2	2	2	2	PIPE FITTING - S/O ELL
32*	034-001400	2	2	2	2	2	2	PIPE FITTING - S/O TEE
33*	034-001397	3	3	3	3	3	3	PIPE FITTING - ELL
34	034-001404	3	4	5	6	7	9	PIPE FITTING - BASE
35	040-001434	12	16	20	24	28	36	WHIZ BOLT - 5/16"-18UNC X 3/4"
36	040-001459	12	16	20	24	28	36	WHIZ NUT - 5/16"-18UNC
37	040-002193	15	18	21	24	27	33	WHIZ BOLT - 3/8"-16UNC X 3/4"
38	040-001483	9	12	15	18	21	24	WHIZ BOLT - 3/8"-16UNC X 1"
39	040-001460	44	54	64	74	84	101	WHIZ NUT - 3/8"-16UNC
40	040-002739	6	6	6	6	6	6	SCREW - TCS - 5/16"-18UNC X 3/4"
41	040-008665	20	24	28	32	36	44	BOLT - CARRIAGE 3/8"-16UNC X 1-1/4"

* INDICATES ITEMS THAT ARE SHIPPED WHEN SIDE WALKWAY IS FACTORY INSTALLED

NOTE:

1. QTY'S SHOWN ARE FOR ONE SIDE OF THE DRYER ONLY.
2. ILLUSTRATION DRAWING SHOWN IS A 25FT DRYER.
3. GARNER AND OTHER FEATURES HAVE BEEN LEFT OFF DRAWING FOR ILLUSTRATION PURPOSES.

ECO#	LET	DESCRIPTION	DATE
	A	BOM REVISED	06/14/07

DRAWN BY: JGW
DATE: 0906/07
CHK'D:
SCALE: .046

DELUX MFG. CO.
KEARNEY, NE

USED ON:
NEXT ASS'Y:
MATL.
SHEAR SIZE

TITLE:
ILLUSTRATION DRAWING
WALKWAY ON 45 DEGREE SLOPE
DP/SL, DPX/SL, 4T, 8T, 12T

DRAWING NO.
900-008667

TOLERANCE: DECIMAL .#10 FRACTION #1/32 ANGLE #1 UNLESS OTHERWISE SPECIFIED

Features

- 2-Way Normally Closed operation.
- For liquid petroleum gases (propane) in both liquified and gaseous states.
- Applications such as grain dryers, incinerators, space heaters, etc.
- Mountable in any position.

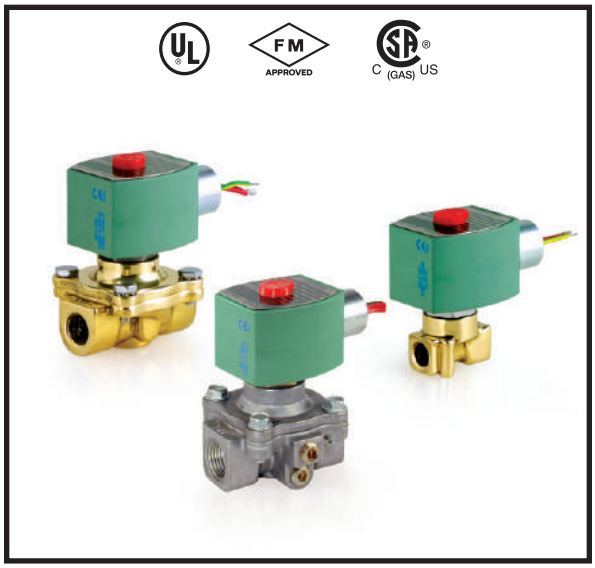

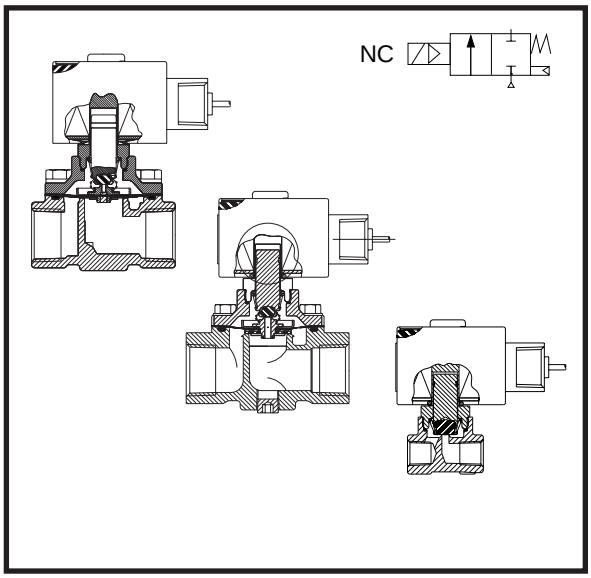

Construction

Valve Parts in Contact with Fluids				
Series	**8262**	**8210**	**8214**	**226787-1**
Body	Brass	Brass	Aluminum	Brass
Seals and Disc	NBR	NBR	NBR	NBR
Core Tube	305 SS	305 SS	305 SS	305 SS
Core Guide	Brass	Brass	Brass	Brass
Core and Plugnut	430F SS	430F SS	430F SS	430F SS
Springs	302 SS	17-7PH SS	17-7PH SS	302 SS
Shading Coil	Copper	Copper	Copper	Copper
Pipe Plug	-	-	Zinc Plated Steel	-

Electrical

Standard Coil Class of Insulation	Watt Rating and Power Consumption AC			Ambient Temp. °F	Spare Coil Family	
					General Purpose	Explosionproof
	Watts	VA Holding	VA Inrush		AC	AC
F	10.1	25	70	-20 to 125	238610	238614
F	17.1	40	93	-20 to 125	238610	238614
F	15.05	28	55	32 to 125	-	064982

Standard Voltages: 24, 120, 240 volts AC, 60 Hz (or 110, 220 volts AC, 50 Hz).

Solenoid Enclosures

(8210, 8214, 8262)
RedHat II Molded Epoxy, Watertight, Types 1, 2, 3, 3S, 4 and 4X with 1/2" conduit hub.

(226787-1)
RedHat Metal, Explosion Proof, Types 3, 7C, 7D, 9E, F&G with 1/2" conduit hub.

Approvals:

UL listed to standard 429 "Electrically Operated Valves," Guide YIOZ, File MP618, Safety Valves.

FM Approved to Class 7400 "Liquid and Gas Safety Shutoff Valves."

CSA Certified to:
1) Standard C22.2 No. 139 "Electrically Operated Valves," File 010381.

2) Automatic Gas Safety Shutoff Valves C/I (3.9), File 112872. (8210 & 8214)

3) Valves for Hazardous Locations, File 013976. (226787-1)

Specifications

Pipe Size (ins.)	Orifice Size (ins.)	CV Flow	Gas Capacity ① Btu/hr.	Operating Pressure Differential (psi) Min.	Operating Pressure Differential (psi) Max.	Max. Fluid Temp.°F	Catalog Number	Const. Ref.	Agency UL	Agency FM	Agency CSA	Wattage	Approx. Shipping Weight (lbs)
COMBUSTION (Fuel Gas) - NORMALLY CLOSED													
1/4	1/8	0.35	27,250	0	250	125	8262G232B	1	❍	-	❍	17.1	2.3
1/4	9/32	0.96	74,700	0	45	125	8262G210B	1	❍	❍	❍	10.1	2.4
3/8	5/8	2.8	218,000	5	250	125	8210H105B	2	❍	❍	❍	17.1	3.2
3/8	3/4	3.4	226,000	0	50	125	8214G010B	3	❍	❍	❍	17.1	2.0
1/2	5/8	3.6	280,000	5	250	125	8210H106B	2	❍	❍	❍	17.1	3.2
1/2	3/4	4.4	374,000	0	50	125	8214G020B	3	❍	❍	❍	17.1	2.0
3/4	3/4	5.1	397,000	0	50	125	8214G030B	4	❍	❍	❍	17.1	2.0
3/4	3/4	6.5	506,000	5	350	125	226787-1	5	❍	-	❍	15.05	3.5

❍ = Safety Shutoff Valve. ① 1" W.C. Drop @ 2" W.C. Inlet Pressure, 2,300 Btu/cu.ft. or more, 1.6 Specific Gravity Gas.

Capabilities Chart

Solenoid Options				Base Catalog Number		Resilient Materials	Standard Rebuild Kit
NEMA Type 3-9	72" Leads	High Temp.	Wiring Box Screw Terminal	Brass	Aluminum	NBR	AC
EF	L	HB	JKP	8262G232B	-	●	304088
EF	L	HT	JKF	8262G210B	-	●	304088
EF	L	HB	JKP	8210H105B	-	●	316669
-	L	HB	JKP	-	8214G010B	●	316667
EF	L	HB	JKP	8210H106B	-	●	316669
-	L	HB	JKP	-	8214G020B	●	316667
-	L	HB	JKP	-	8214G030B	●	316667
-	L	-	-	266787-1	-	●	310038

● = Standard. Other options may be available. All option combinations may not be available.

Dimensions: inches

Const. Ref. No.	A	B	E	H	J	K	L	N	P	R	T	W
1	-	3.03	-	3.16	2.04	1.78	1.56	-	2.75	-	1.95	1.18
2	1.66	3.03	-	3.95	2.04	2.42	2.75	3.42	3.39	-	1.95	2.28
3	1.14	3.03	1.36	4.08	2.04	2.47	2.75	3.42	3.46	1.36	1.95	2.50
4	1.14	3.03	1.25	4.52	2.04	2.66	3.31	3.70	3.64	1.66	1.95	2.39
5	-	3.25	-	4.63	2.76	2.44	3.78	4.38	4.00	1.62	2.50	2.75

Const. Ref. 1

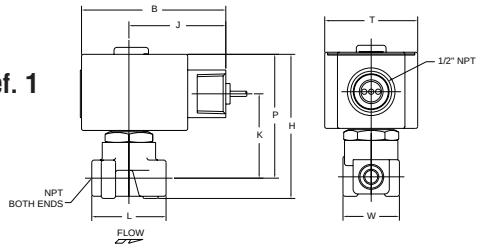

Const. Ref. 3, 4

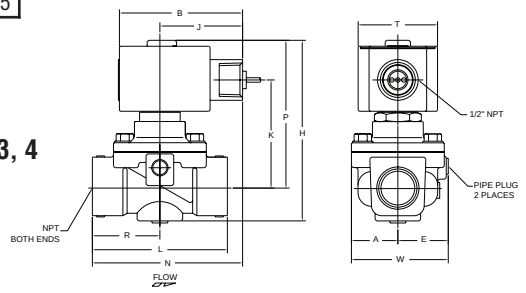

Const. Ref. 2

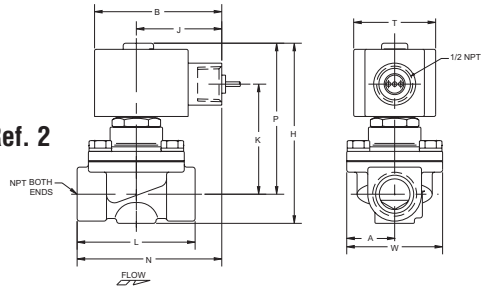

Const. Ref. 5

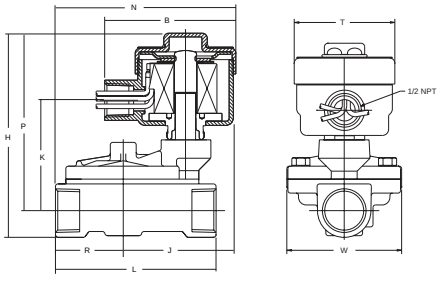

JOHNSON CONTROLS

M100G Series Proportional Actuator with VDC/mA Control Input R81GAA-2 Interface Board

The M100G Series actuator is used in applications where dampers or valves are to be modulated open or closed. Typical applications include positioning a CD-1300 Series damper; opening and closing a diverting valve; positioning a hot water, chilled water, or steam valve; controlling an inlet vane damper on a fan, outdoor air, return air, and exhaust dampers; face and bypass control; and blade positioning for variable volume fans.

The R81GAA-2 electronic circuit board in the actuator accepts a proportional 0 to 10 VDC or 4 to 20 mA control signal. The control signal is jumper selectable for Direct Action (DA) or Reverse Action (RA).

Refer to damper manufacturer's information to properly size the damper and actuator. Return-to-normal spring return actuators are recommended for use with outdoor air dampers.

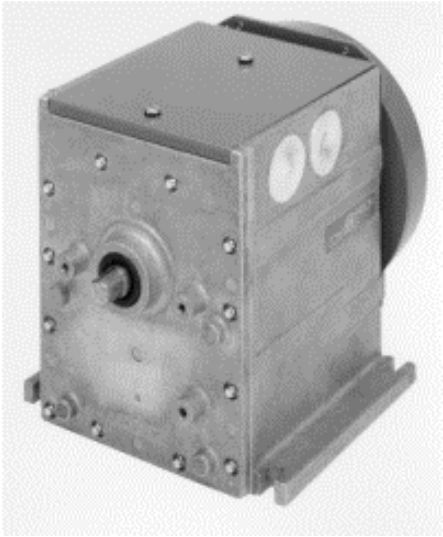

Figure 1: M100G Series Proportional Actuator

Features and Benefits

❑ **Auxiliary Output Shaft**	Allows use of accessories and linkage connections for dampers
❑ **Load Versatility**	Available in torques of 25, 35, 50, 75, and 150 lb·in (2.8, 4.0, 5.7, 8.5, and 17 N·m)
❑ **Travel Adjustment Located in Top Wiring Compartment**	Makes adjustment easy and reduces installation time
❑ **Plug-in Electronic Interface Boards**	Allows faster replacement or conversions, shorter service times, and reduces inventory

© 2000 Johnson Controls, Inc.

Operation

IMPORTANT:	All M100G Series actuators are intended to control equipment under normal operating conditions. Where failure or malfunction of M100G actuators could lead to an abnormal operating condition that could cause personal injury or damage to the equipment or other property, other devices (limit or safety controls) or systems (alarm or supervisory) intended to warn of, or protect against, failure or malfunction of M100G actuators must be incorporated into and maintained as part of the control system.

The M100G proportional actuator is factory set for DA with a 4 to 20 mA input signal for 90° travel.

Dimensions

Dimensions for a CVR83A-600R Weather Cover Kit are shown in Figure 2, an actuator and a switch kit in Figure 3, and a spring return actuator in Figure 4. Allow additional space for the optional cover-mounted transformer (2.5 in. [63.5 mm] height), and the switch kit (2 in. [50.8 mm] length at the auxiliary end).

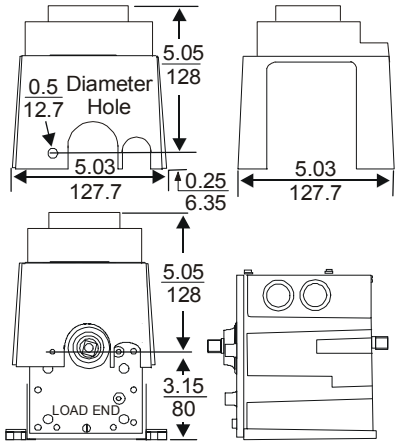

Figure 2: CVR83A-600R Dimensions, in. (mm)

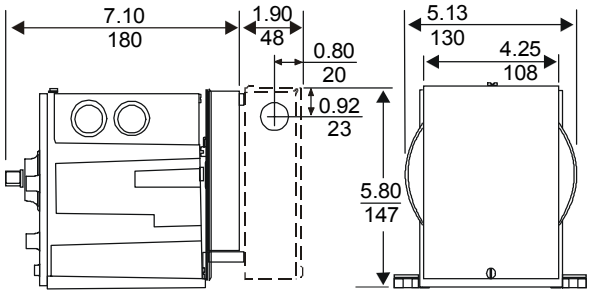

Figure 3: Spring Return with Switch Kit Dimensions, in. (mm)

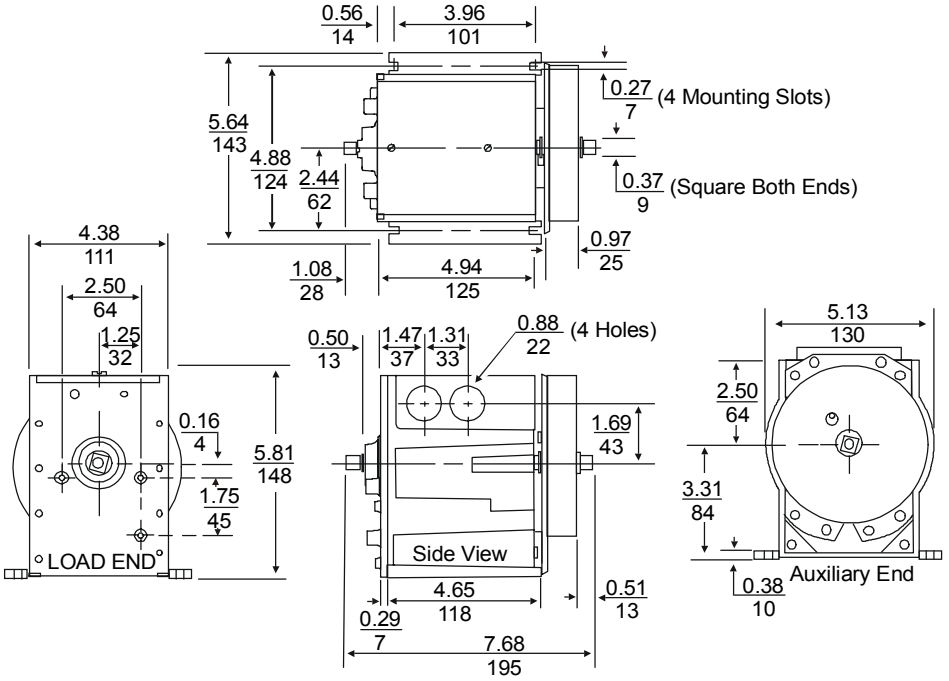

Figure 4: M100 with Spring Return Dimensions, in. (mm)

Repair and Replacement

The drive motor and gear train are immersed in oil and sealed in a die cast case, so maintenance is not necessary. Make no field repairs, except to replace the R81G electronics kit.

Ordering Information

Specify code number R81-GGA-2 to order an electronics kit. Refer to Table 1 or Table 2 for the product code for an actuator or accessory, and contact the nearest Johnson Controls representative.

Table 1: M100G Actuators

Product Code	Description
M110GGA-3	25 lb·in (2.8 N·m) torque, spring return, 24 VAC, VDC/mA input and adjustable zero and span
M120GGA-3	35 lb·in (4.0 N·m) torque, non-spring return, 24 VAC, VDC/mA input and adjustable zero and span
M130GGA-3	50 lb·in (5.6 N·m) torque, spring return, 24 VAC, VDC/mA input and adjustable zero and span
M140GGA-3	75 lb·in (8.5 N·m) torque, non-spring return, 24 VAC, VDC/mA input and adjustable zero and span
M150GGA-3	150 lb·in (17.0 N·m) torque, non-spring return, 24 VAC, VDC/mA input and adjustable zero and span
M110XGA-1*	25 lb·in (2.8 N·m) torque, spring return
M120XGA-1*	35 lb·in (4.0 N·m) torque, non-spring return
M130XGA-1*	50 lb·in (5.6 N·m) torque, spring return
M140XGA-1*	75 lb·in (8.5 N·m) torque, non-spring return
M150XGA-1*	150 lb·in (17 N·m) torque, non-spring return

* Requires the R81G electronics kit.

Table 2: Accessories

Product Code	Description
Y68AA-1	Transformer, 120/24 VAC, 40 VA, 60 Hz, Class 2
Y68DA-1	Transformer, 240/24 VAC, 40 VA, 60 Hz, Class 2
Y68HA-1	Transformer, 24/24 VAC, 40 VA, 60 Hz, Class 2
S91DJ-1	Auxiliary switch kit with one Single-Pole, Double-Throw (SPDT) switch
S91EJ-1	Auxiliary switch kit with two SPDT switches
S91PT-1	Auxiliary potentiometer kit, 1000 ohm, 1/3 watt
CVR83A-600R	Weather cover kit
Y20DAA-2	Mounts actuator to top of duct or any flat surface; includes LVR27A-602, LVR27A-600, ROD16-3, and SWL10A-603Y (2)
Y20DAB-2	Mounts the actuator to the side of a duct or wall; includes all items in the Y20DAA-2 plus one BKT22A-602
Y20EBA-1	Valve linkage kit for mounting Honeywell® valves with 1/4-28 stem connection to M120 or M130 actuators
Y20EBA-2	Valve linkage kit for mounting Honeywell valves with 1/4-28 stem connection to M150 actuators
Y20EBA-3	Valve linkage kit for mounting Barber-Coleman® valves with 1/4-28 stem connection to M120 or M130 actuators
Y20EBA-4	Valve linkage kit for mounting Barber-Coleman valves with 1/4-28 stem connection to M150 actuators
Y20EBD-1	Linkage kit for M120 or M130 actuators and 1-1/4 in. (DN 32) valves, produces 75 lb (334 N) seating force
Y20EBD-2	Linkage kit for M140 actuators and 1-1/4 in. (DN 32) valves, produces 150 lb (607 N) seating force
Y20EBD-3	Linkage kit for M150 actuators and 1-1/4 in. (DN 32) valves, produces 270 lb (1202 N) seating force
Y20EBD-5	Linkage kit for M110 actuators and 1-1/4 in. (DN 32) valves, produces 40 lb (178 N) seating force
Y20EBD-6	Linkage kit for M120 or M130 actuators and 1-1/4 in. (DN 32) valves, produces 100 lb (449 N) seating force
Y20EBE-1	Coupling adaptor to convert valves with a 5/16 in. stem and a hold down nut for Johnson Controls 1/2 to 3 in. valves manufactured prior to March 1969
Y20EBE-2	Stem adaptor and centerpiece collar to adapt VT Series valves with slotted stems (Y20EBD-5 kit also required)
Y20EBE-3	Hold down nut for cast iron and VB Series 2-1/2 to 4 in. valves, yoke nut for Barber-Coleman 1/2 to 2 in. valves
Y20EBE-4	Stem connector for Barber-Coleman 2-1/2 to 4 in. valves (5 per package) used with Y20EBD-3 or Y20EBD-6
Y20EBE-11	Valve linkage adaptor kit for VG7000 valves (Y20EBD Series kit also required)
VG7000-M110	Mounting kit for M110 actuator and 1/2 through 2 in. (DN15 through DN50) valves
VG7000-M130	Mounting kit for M130 actuator and 1/2 through 2 in. (DN15 through DN50) valves
VG7000-M140	Mounting kit for M140 actuator and 1/2 through 2 in. (DN15 through DN50) valves
VG7000-M150	Mounting kit for M150 actuator and 1/2 through 2 in. (DN15 through DN50) valves
Y20DFC-1	Damper linkage kit for mounting the actuator to the inside or outside frame of CD-1300 dampers only

Specifications

Product	M100G Series Proportional Actuator with VDC/mA Control Signal Input R81GAA-2 Interface Board
Power Requirements	24 VAC, Class 2 (20 to 30 VAC) at 50/60 Hz, 25 VA spring return, 20 VA non-spring return
Input Signal	0 to 24 VDC, 0 to 20 mA with 500 ohm resistor; factory calibrated 4.0 to 19.6 mA
Input Signal Adjustments	Direct Acting (DA) or Reverse Acting (RA) operation Zero: Adjustable 0.25 to 24 VDC Span: Adjustable 2.00 to 18 VDC
Mechanical Connection	3/8 in. (9.5 mm) square shaft, both ends Maximum dead weight on output shaft: 200 lb (91 kg), load end; 10 lb (4.5 kg), auxiliary end
Mechanical Output	Running Torque / Breakaway and Stall (minimum) M110 25 lb·in (2.8 N·m) spring return / 100 lb·in (11 N·m) M120 35 lb·in (4.0 N·m) / 70 lb·in (7.9 N·m) M130 50 lb·in (5.6 N·m) spring return / 200 lb·in (23 N·m) M140 75 lb·in (8.5 N·m) / 150 lb·in (17 N·m) M150 150 lb·in (17 N·m) / 300 lb·in (34 N·m)
Rotation Range	Fixed zero, adjustable full travel 65 to 270°; factory set at 90° full travel
Input Impedance	44,000 ohms
Rotation Timing (at Rated Load)	60 seconds for 160° travel nominal, 60 Hz 38 seconds for 90° travel nominal, 60 Hz 75 seconds for 90° spring return
Cycle Life	M110 and M130 spring return models: 150,000 cycles at rated load M120, M140, and M150 non-spring return models: 200,000 cycles at rated load
Electrical Connection	1/4 in. quick-connect spade terminals
Action	Clockwise rotation on increasing signal (DA) and counterclockwise rotation on increasing signal (RA); factory set for DA
Ambient Operating Conditions	Spring Return: -35 to 125°F (-37 to 52°C), 90% RH Non-spring Return: -40 to 125°F (-40 to 52°C), 90% RH
Ambient Storage Conditions	-40 to 140°F (-40 to 60°C), 90% RH
Dimensions (H x W x D)	Spring Return: 5.81 x 5.64 x 7.68 in. (148 x 143 x 195 mm) Non-spring Return: 5.81 x 5.64 x 4.94 in. (148 x 143 x 125mm)
Shipping Weight	Spring Return: 9 lb (4.1 kg) Non-spring Return: 6.5 (2.9 kg)
Enclosure	NEMA 2, IP32
Agency Compliance	M1x0GGA is UL Recognized, File E27734, CCN XAPX2 M1x0GGA is UL Listed, File E107041, CCN PAZX CSA Certified, File LR948, Class 4813 02
EU Directive Compliance	89/336/EEC (CE Mark), M1x0GGA models only

The performance specifications are nominal and conform to acceptable industry standards. For application at conditions beyond these specifications, consult the local Johnson Controls office. Johnson Controls, Inc. shall not be liable for damages resulting from misapplication or misuse of its products.

JOHNSON CONTROLS

Controls Group
507 E. Michigan Street
P.O. Box 423
Milwaukee, WI 53202

Printed in U.S.A.
www.johnsoncontrols.com

Valve model number description

Every MAXON gas electro-mechanical valve can be accurately identified by the model number shown on the valve nameplate. The example below shows a typical gas electro-mechanical valve model number, along with the available choices for each item represented in the model number.

Configured item number						Valve body					Actuator					
Valve size	Flow capacity	Valve type	Normal position	Area classification		Body connection	Body seals & bumper material	Body material	Internal trim package		Solenoid OR circuit board voltage	Motor voltage OR handle side plate	Motor timing (automatic valves only)	Switch options	Enclosure rating	Instruction language
300	C	MA	1	1	-	A	A	1	1	-	B	B	2	0	A	0

Valve size
075 - 3/4" (DN20)
100 - 1" (DN25)
125 - 1-1/4" (DN32)
150 - 1-1/2" (DN40)
200 - 2" (DN50)
250 - 2-1/2" (DN65)
300 - 3" (DN80)
400 - 4" (DN100)
600 - 6" (DN150)

Flow capacity
S - Standard
C - CP body construction
H - High capacity

Valve reset type
MA - MAXON automatic (motorized) valve
MM - MAXON manual valve

Normal position
1 - Normally closed shut-off valve
2 - Normally open vent valve

Area classification
1 - General purpose
2 - Non-incendive, Class I, II and III Division 2
4 - Valve body only (400 & 600 high capacity valves only)

Body connection
A - ANSI (NPT) threaded
B - ANSI flanged (PN20)
C - ISO 7/1 threaded
D - DIN PN16 flanged
E - Socket welded nipple
F - Socket welded nipple w/Class 150 flange (ISO 7005 PN20)
H - EN1092-1 PN16 flanged (ISO 7005-1 PN16)

Body seals & bumper material
A - Buna o-rings/Buna bumper
B - Viton o-rings/Buna bumper
C - Viton o-rings/Viton bumper [1]
D - Ethylene Propylene o-rings/Ethylene Propylene bumper [1]
E - Omniflex o-rings/Buna bumper
F - Omniflex o-rings/Viton bumper [1]

Body material
1 - Cast iron
2 - Carbon steel
5 - Stainless steel
6 - Low temp carbon steel

Internal trim package
1 - Trim package 1
2 - Trim package 2
4 - Trim package 2, oxy clean [1]

Solenoid OR circuit board voltage
A - 115VAC 50 Hz
B - 115VAC 60 Hz
C - 230VAC 50 Hz
D - 230VAC 60 Hz
E - 208VAC 50 Hz
F - 24VDC
G - 120VDC

Motor voltage
A - 115VAC 50 Hz
B - 115VAC 60 Hz
C - 230VAC 50 Hz
D - 230VAC 60 Hz
E - 24VDC

OR

Handle side plate
A - Standard handle
B - Tandem main
C - Tandem blocking
D - Tandem overhead
E - Wheel and chain

Motor timing
1 - 2.5 second
2 - 6 second
3 - 12 second
* - N/A with manual valves

Switch options

Automatic valves
0 - VOS1/none
1 - VOS1/VCS1
2 - VOS2/VCS2
3 - VOS2/VCS1
4 - VOS1HC/VCS1HC

Manual valves
0 - None
1 - VOS1/VCS1
2 - VOS2/VCS2
3 - VOS2/VCS1

Enclosure rating
A - NEMA 4
B - NEMA 4X

Instruction language
0 - English

[1] -18°C minimum ambient temperature limit

Maxon reserves the right to alter specifications and data without prior notice.
© 2009 Copyright Maxon Corporation. All rights reserved.

Available voltages and electrical data - Non-incendive areas

All MAXON valves are electrically actuated from a power source through the flame safeguard and/or safety control circuits. Standard valve assemblies include an internal holding solenoid on standard flow and CP body constructions, or a printed circuit board on high capacity valves. The solenoid (or printed circuit board) is energized whenever the valve is powered. The motor operator on automatic reset valves is powered only during the opening stroke for normally-closed valves, or the closing stroke for normally-open versions.

Standard flow and CP body constructions

Solenoids					
3/4" - 1-1/2" standard flow		2" - 3" standard flow		2-1/2"CP - 4"CP & 6" standard flow	
Voltage	Power	Voltage	Power	Voltage	Power
115VAC, 50 Hz	23VA	115VAC, 50 Hz	23VA	115VAC, 50 Hz	34VA
115VAC, 60 Hz	16VA	115VAC, 60 Hz	16VA	115VAC, 60 Hz	26VA
230VAC, 50 Hz	23VA	230VAC, 50 Hz	23VA	230VAC, 50 Hz	34VA
230VAC, 60 Hz	16VA	230VAC, 60 Hz	16VA	230VAC, 60 Hz	26VA
24VDC	18W	24VDC	24W	24VDC	24W
120VDC	26W	120VDC	34W	120VDC	34W

Motor operators	
Voltage	Power
115VAC, 50 Hz	322VA
115VAC, 60 Hz	196VA
230VAC, 50 Hz	322VA
230VAC, 60 Hz	198VA

To determine valve OPENING power: (or CLOSING power for normally-open versions)

Automatic reset valves

- Total power is the sum of the motor and solenoid power ratings for the appropriate voltage/frequency in the tables above.
- If supply voltages are different, then the circuits must be segregated.

Manual reset valves

- Total power consists of only the solenoid power rating.

To determine valve HOLDING power:

- Holding power consists of the solenoid power rating for the appropriate voltage/frequency.

Maxon reserves the right to alter specifications and data without prior notice.
© 2009 Copyright Maxon Corporation. All rights reserved.

Dimensions and weights

Valve bodies: 3/4” (DN20) to 3” (DN80)

1) (2) 1/4” NPT test connection

Body connection A & C

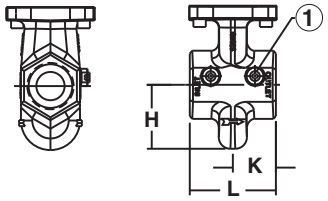

Body connection B, D & H

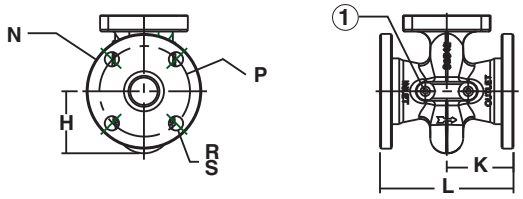

Body connection E

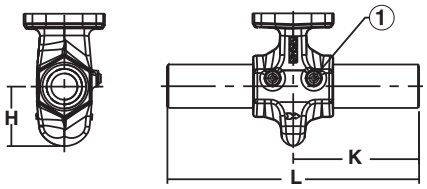

Body connection F

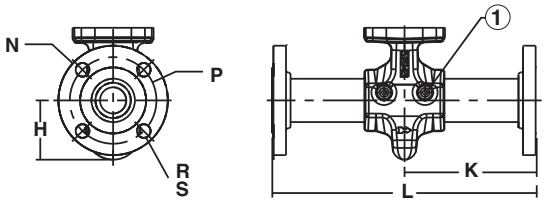

Valve size	Flow capacity	Body Connection	Body/ bonnet material	Approximate dimensions (in mm)							Approximate weight (in kg)		
				H	K	L	N Ø	P Ø	R Ø	S # of holes	Body assembly	Actuator assembly	Total weight
3/4” (DN20)	S	A, C	Cast iron	51	48	96	N/A				3.6	5	8.6
1” (DN25)	S	A, C	Cast iron				N/A				3.6		8.6
		A, C	Carbon steel & stainless steel				N/A				4		9
		E			175	350	N/A				5		10
		F			185	368	109	79	16	4	6.8		11.8
1-1/4” (DN32)	S	A, C	Cast iron	61	51	102	N/A				4		9
1-1/2” (DN40)	S	A, C	Cast iron	68			N/A				5		10
		A, C	Carbon steel & stainless steel				N/A				5		10
		E			173	345	N/A				6		11
		F			183	366	127	99	16	4	9.5		14.5
2” (DN50)	S	A, C	Cast iron	84	56	112	N/A				7	6	13
		B			89	178	152	122	19	4	12		18
		D, H					165	124	18		12		18
		A, C	Carbon steel & stainless steel		56	112	N/A				8		14
		E			175	350	N/A				10		16
		F			185	368	152	122	19	4	15		21
2-1/2” (DN65)	S	A, C	Cast iron	74	63	127	N/A				8.6		14.6
		B		79	96	190	178	140	19	4	13.5		19.5
		D, H					185	145	18		13.5		19.5
3” (DN80)	S	A, C	Cast iron	76	66	132	N/A				9		15

Flow capacity:
S - Standard
C - CP body construction
H - High capacity

Body connection:
A - NPT
B - ANSI flanged (ISO 7005 PN20)
C - ISO 7-1 threaded
D - DIN PN16 flanged
E - Socket welded nipple
F - Socket welded nipple w/Class 150 flange (ISO 7005 PN20)
H - EN 1092-1 PN16 (ISO 7005-1 PN16)

Maxon reserves the right to alter specifications and data without prior notice.
© 2009 Copyright Maxon Corporation. All rights reserved.

MAXON
A Honeywell Company

Valve bodies and actuators: 4” & 6” high capacity valves

1) (2) 3/4” NPT conduit connection
2) (2) 1/4” NPT test connection
3) Pipe size

HMA11 versions only
(formerly 7000)

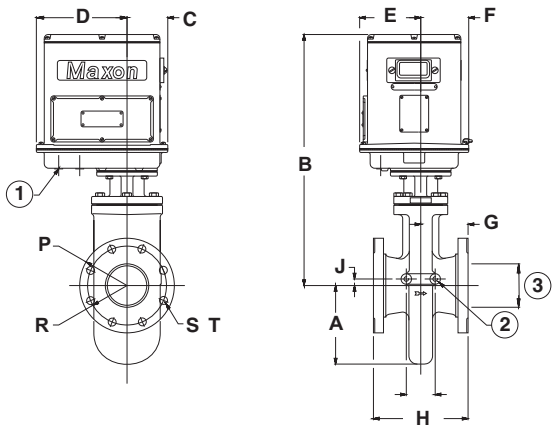

Valve size	Flow capacity	Valve type	Approximate dimensions (in mm)					
			A	B	C	D	E	F
4” (DN100)	H	MA11	186	606	98	219	106	116
6” (DN150)	H	MA11	213	635			147	

Valve size	Body connection	Body/bonnet material	Approximate dimensions (in mm)							Approximate weight (in kg)		
			G	H	J	P Ø	R Ø	S Ø	T # of holes	Body assembly	Actuator assembly	Total weight
4” (DN100)	B	Cast iron	114	229	16	229	190	19	8	43	20	63
	D, H					221	180	18		43		63
	B	Carbon steel & stainless steel				229	190	19		43		63
	D, H					221	180	18		43		63
6” (DN150)	B	Cast iron	133	267	16	279	241	22	8	53	20	73
	D, H					284	239	22		53		73
	B	Carbon steel & stainless steel				279	241	22		57		77
	D, H					284	239	22		57		77

Flow capacity:
S - Standard
C - CP body construction
H - High capacity

Body connection:
A - NPT
B - ANSI flanged (ISO 7005 PN20)
C - ISO 7-1 threaded
D - DIN PN16 flanged
E - Socket welded nipple
F - Socket welded nipple w/Class 150 flange (ISO 7005 PN20)
H - EN1092-1 PN16 (ISO 7005-1 PN16)

Maxon reserves the right to alter specifications and data without prior notice.
© 2009 Copyright Maxon Corporation. All rights reserved.

Available top assembly positions

The valve top assembly can be positioned on the body in four different orientations. See sketches below to determine the designation of the required orientation for your application.

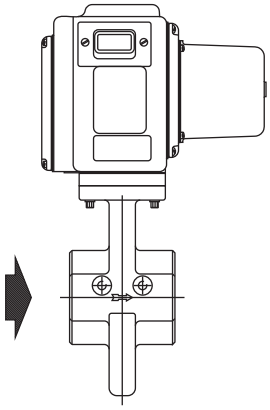

Position “R”

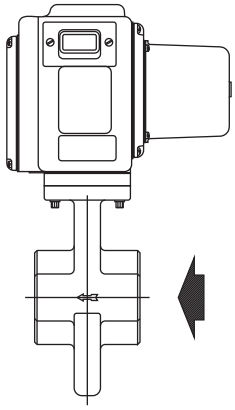

Position “L”

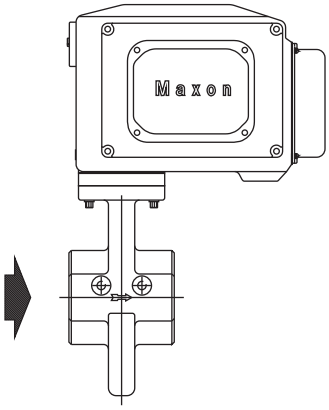

Position “AW”

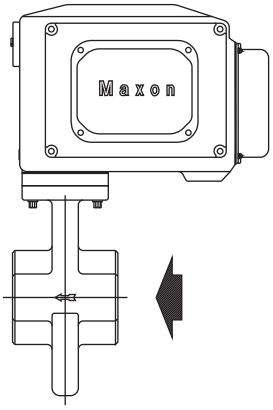

Position “TO”

Maxon reserves the right to alter specifications and data without prior notice.
© 2009 Copyright Maxon Corporation. All rights reserved.

Actuator assembly rotation



MAXON electro-mechanical valves should be ordered in a configuration compatible with planned piping. If valve orientation is not correct, the actuator assembly can be rotated in 90° increments around the valve body centerline axis using the procedure below.

1. Shut off all electrical power and close off upstream manual cock.
2. Remove terminal block cover plate and disconnect power lead wires. (Tag carefully for later re-assembly.)
3. Remove conduit and electrical leads.
4. Note physical position of any signal switch actuator wands on auxiliary signal switches.
5. Unscrew the two actuator bolts screwed up from the bottom to 6 mm. DO NOT completely remove. These bolts secure the valve body to the valve's top assembly housing.
6. Gently lift the top assembly (not more than 6 mm in height); just enough to break the seal between the valve body assembly and the rubber gasket adhering to the bottom of the top housing.



WARNING: Lifting too far may dislodge some small parts inside the top housing, requiring complex re-assembly and retesting by trained factory personnel.

7. Remove the two actuator bolts screwed up from the bottom (were partially unscrewed in step 5).
8. Carefully rotate top assembly to the desired position in a plane parallel to the top of the valve body casting. Rotate the top housing about 30° beyond this position, and then rotate it back. Reposition the top housing back down onto the valve body casting. This should align the open/shut indicator with its window and provide proper alignment of the internal mechanism.
9. Realign holes in valve body casting with the corresponding tapped holes in the bottom of the top assembly housing. Be sure the gasket is still in place between the body and top housing.
10. Reinsert the actuator bolts up from the bottom through the body and carefully engage threads of the top assembly. Tighten securely.
11. Reconnect conduit and electrical leads, then check that signal switch wands are properly positioned and that the open/shut indicator moves freely. Failure to correct any such misalignment can result in extensive damage to the internal mechanism of your valve.
12. Energize valve and cycle several times from closed to full open position. Also electrically trip the valve in a partially opened position to prove valve operates properly.
13. Replace and secure terminal block cover plate and place valve in service.

Maxon reserves the right to alter specifications and data without prior notice.
© 2009 Copyright Maxon Corporation. All rights reserved.

Field installation of valve position switch

General

- Shut off fuel supply upstream of valve, then de-energize valve electrically.
- Remove terminal block and access cover to provide access, being careful not to damage gaskets.
- Compare with illustrations below to identify your valve type.

Replacement switches

- Note wand position and mounting hole location carefully, then remove 2 screws and lift existing switch.
- Install replacement switch in same mounting holes on bracket and verify correct wand position.
- Replace existing wiring one connection at a time, following original route and placement.

Add switches

NOTE: Instructions below are written for normally-closed valves. For normally-open valves, reverse switch nomenclature (VOS becomes VCS and vice versa).

- Check illustrations below. If your valve uses a switch mounting bracket as in Fig. 1 & 2, mount switches to bracket using the mounting holes appropriate for valve type and size. For high capacity valves, mount switches on the support stand.
- Position bracket so VCS wand just touches top of actuator, then move downward slightly, depressing wand until switch clicks, then tighten mounting screws to hold this position.
- Pin bracket by drilling 3 mm diameter holes 6 mm deep into bracket mounting pad through drive pin holes, then tap drive pin in until flush (not required for high capacity valves).
- Route wires to wiring compartment as shown, then complete wiring connections and clean out metal drilling chips from previous procedure.
- Cycle valve, checking switch actuation points carefully. (VCS actuates at top of stem stroke, VOS at bottom.) Simultaneously the valve body must be tested for switch continuity and seat leakage. Bend VOS switch wands slightly if necessary to insure valve is opening fully.
- Replace covers, then return valve to service.

Fig. 1
Manual reset actuator
3/4” - 3” standard flow

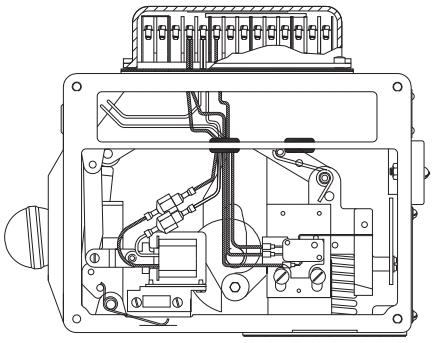

Reference mounting bracket A

Fig. 2
Automatic reset actuator
2-1/2” CP - 4” CP and 6” standard flow

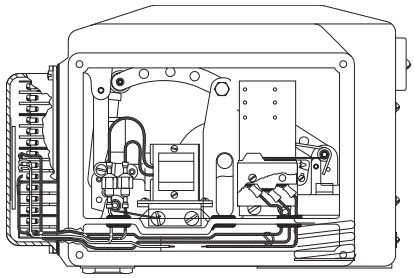

Reference mounting bracket B

Fig. 3
Automatic reset actuator
4” & 6” high capacity

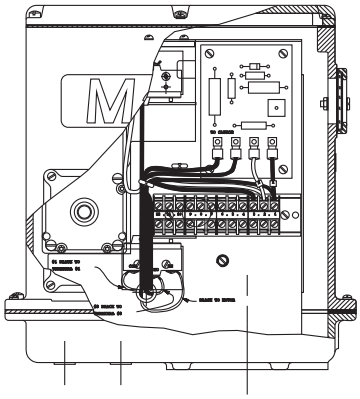

Switches mount on support stand

Maxon reserves the right to alter specifications and data without prior notice.
© 2009 Copyright Maxon Corporation. All rights reserved.

MAXON
A Honeywell Company

Wand position (for normally-closed valves)

VOS switch wand should be actuated from above



VCS switch wand should be actuated from below



Mounting brackets

Mounting bracket A

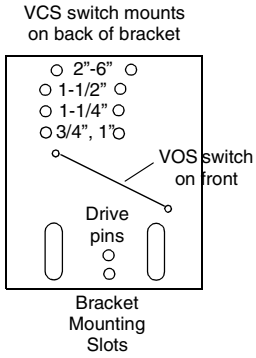

Mounting bracket B

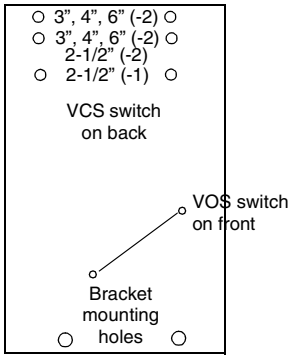

Maxon reserves the right to alter specifications and data without prior notice.
© 2009 Copyright Maxon Corporation. All rights reserved.

Tandem arrangements

(for simultaneous opening of main and blocking valves)

Installation instructions for tandem arrangements

1. Review and comply with all general valve installation instructions provided separately. (See sketch below.)
2. Mount both valves in fuel line with center to center spacing as originally specified, and blocking valve (without handle) downstream of main valve (with handle).
3. Check valve alignment to be certain that operating wheels lie in the same plane.
4. Remove tape from the wheel of the main valve and unwind the attached chain. Do not remove the screw holding chain to wheel; it has been factory positioned to assure correct alignment. Do not remove tension spring attached to one end of chain or the wooden block insert which preloads the spring.
5. Take free end of chain and loop it around the wheels of both main and blocking valve as shown in sketch below. Depending on the specific valve series and arrangement, tension spring may be located either above or below the wheel centerline.
6. Draw free end of chain and tension spring together so that as much slack as possible is eliminated, then insert the open eye of the spring “S” hook through the link in the chain that will most nearly maintain this position.
7. Crimp the “S” hook shut around the chain link, then cut and discard excess chain.
8. Remove spring preload wood block insert from the tension spring, and verify that the chain is drawn tight.
9. Rotate the operating handle of the main valve fully to latching position for your particular valve, then hold handle firmly in this position while performing the next few steps.
10. Rotate blocking valve wheel fully counter-clockwise until it strikes a stop (it will slide within the loop of chain).
11. Still holding main valve wheel in place, move blocking valve wheel approximately 6 mm to 12 mm back in the clockwise direction. Insert the #10-24 X 1/2” screw (furnished) through the chain link that lines up with the tapped hole on bottom of blocking valve wheel, then fasten securely.
12. Verify that the valves are wired in parallel as shown in wiring schematic on page 10-30.1-13.

1) Tandem main valve
2) Tandem blocking valve
3) Tension spring
4) Piping by others
5) Flow direction

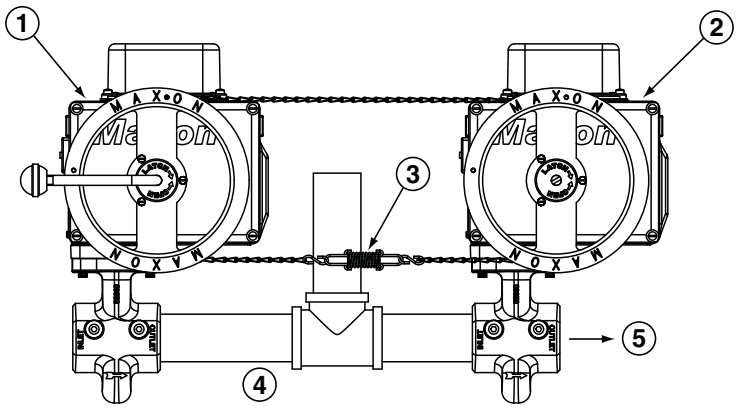

Maxon reserves the right to alter specifications and data without prior notice.
© 2009 Copyright Maxon Corporation. All rights reserved.

To add wheel & chain assembly to existing tandem valves

1. Verify that both valves are in the same top assembly position (TO or AW). Rotate if necessary. (See top assembly rotation instructions on page 10-30.1-33.)
2. Bend handle of main valve outward about 25°.
3. Cut off handle of blocking valve at outer wheel face.
4. Remove hardware holding main valve wheel in place and mount new wheel and spacer to the existing wheel with new hardware provided.
5. Cut chain loop to the desired length and secure to both wheels.

Maxon reserves the right to alter specifications and data without prior notice.
© 2009 Copyright Maxon Corporation. All rights reserved.

Maintenance instructions

MAXON electro-mechanical valves are endurance tested far in excess of the most stringent requirements of the various approval agencies. They are designed for long life even if frequently cycled, and to be as maintenance-free and trouble-free as possible. A valve operational test should be performed on an annual basis. If abnormal opening or closing is observed, the valve should be removed from service and your MAXON representative should be contacted. (See MAXON Technical Document 10-35.1.)

Valve leak test should be performed on an annual basis to assure continued safe and reliable operation. Every MAXON valve is operationally tested and meets the requirements of FCI 70-2 Class VI Seat Leakage when in good operable condition. Zero leakage may not be obtained in the field after it has been in service. For specific recommendations on leak test procedures, see MAXON Technical Document 10-35.2. Any valve that exceeds the allowable leakage, as set forth by your local codes or insurance requirements should be removed from service and your MAXON representative should be contacted.

Actuator assembly components require no field lubrication and should never be oiled.

Auxiliary switches, solenoids, motors, clutches or circuit boards may be replaced in the field.



Do not attempt field repair of valve body or actuator. Any alterations void all warranties and can create potentially hazardous situations.

If foreign material or corrosive substances are present in the fuel line, it will be necessary to inspect the valve to make certain it is operating properly. If abnormal opening or closing is observed, the valve should be removed from service. Contact your MAXON representative for instructions.

Operator should be aware of and observe characteristic opening/closing action of the valve. Should operation ever become sluggish, remove valve from service and contact MAXON for recommendations.

Address inquiries to MAXON. Local worldwide offices may be located at www.maxoncorp.com. Include valve serial number and nameplate information.

Maxon reserves the right to alter specifications and data without prior notice.
© 2009 Copyright Maxon Corporation. All rights reserved.

INSTALLATION AND MAINTENANCE INSTRUCTIONS

TRIPOINT® switches

FIXED DEADBAND COMPACT LINE SWITCHES OPEN FRAME, GENERAL PURPOSE OR WATERTIGHT SWITCH ENCLOSURES

SERIES

PB10, PB11, PB16
PB20, PB21, PB26
PB30, PB31, PB36

Form No. P7034—T88

DESCRIPTION

The Fixed Deadband Compact Line Switch is of rugged aluminum alloy construction. The switch may be provided with a General Purpose NEMA Type 1 Switch Enclosure, a Watertight NEMA Type 3 and 4 Switch Enclosure or an open-frame switch.

The compact line switch may be supplied as a complete unit, that is, the switch assembly unit and transducer are completely assembled or as separate units to be assembled upon installation. The actuation (set) point is adjustable over the full range of the switch. The reactuation (reset) point is fixed relative to the actuation point and cannot be adjusted. The switch assembly can be mated with a wide selection of interchangeable pressure, temperature and mechanical transducers to cover a broad range of pressures, fluids, temperatures and mechanical movements. The switch will control electrical circuits in response to changes in pressure, temperature or mechanical signals.

IMPORTANT: This sheet is designed to cover the installation and use of this switch on pressure transducers, temperature transducers and mechanical transducers. Review this sheet and select the paragraphs that apply to your particular installation and application. Throughout the sheet, the word "signal" will be used in place of pressure, temperature or mechanical changes.

INSTALLATION

Check the nameplate for the correct catalog number, pressure range, temperature range, media and rated over range pressure or temperature. Nameplates are located on side cover and on the bottom of the transducer. Check to be sure the third digit in each number is the same. If not, the unit should not be used. (Refer to Figure 2)

IMPORTANT: All internal adjustments have been made at the factory. Any adjustment, alteration or repair to the internal parts of the switch other than stated herein voids all warranties. Signal setting adjustments required are made by adjusting nut on the top of the switch.

TEMPERATURE LIMITATIONS

Ambient temperature limits are −4°F (−20°C) to 122°F (50°C). To determine fluid temperature limitations, see Form No. P7035 for Pressure Transducer catalog numbers and construction materials, then refer to chart below.

TRANSDUCER CONSTRUCTION MATERIALS	RATINGS FLUID TEMPERATURE
Buna N or Neoprene	4°F (−20°C) to 179°F (82°C)
VITON*	−4°F (−20°C) to 250°F (121°C)
316 Stainless Steel	50°F (−45°C) to 300°F (149°C)
All Nylon	Maximum 179°F (82°C)
All Nylon For Water Service	Maximum 130°F (55°C)

For steam service, the fluid temperature with a pigtail (siphon tube or condensate loop) installed directly into the transducer will be below 179°F (82°C).

ASSEMBLY OF SWITCH AND TRANSDUCER UNITS (Refer to Figure 2)

IMPORTANT: The switch unit and transducer unit may be provided as a complete assembly or as separate units. If separate units are provided, refer to Form No. P7035 for a complete listing of switch unit and transducer unit combinations. Form No. P7035 is provided to insure that the proper switch unit be assembled to the proper transducer unit.

Pay careful attention to exploded view provided in Figure 2 for assembly of switch unit and transducer unit. Proceed in the following manner:

1. CAUTION: The third digit in the catalog number on both the switch unit and the transducer unit must be identical. If not, do not assemble to each other. If the same, proceed.
2. Remove bolts (4) from base of switch unit. On general purpose and watertight constructions, remove switch cover.
3. Remove instruction label and pressure, temperature or mechanical switch range scale from the transducer unit.
4. Place transducer unit on base of switch unit and assemble. Start bolts (4) approximately two turns by hand to avoid the possibility of cross threading. After initial engagement, torque bolts (4) in a crisscross manner to 80 ± 10 inch-pounds.
5. Remove backing paper from range scale and install on the front of the switch body over the opening for the adjusting indicator point.

POSITIONING

Switch may be mounted in any position.

MOUNTING

For mounting dimensions for open-frame switch, refer to Figure 2. For mounting dimensions for general purpose switch enclosures, refer to Figure 3. For all switches, an optional mounting bracket is available. For mounting bracket dimensions, refer to Figure 6.

PIPING/TUBING (PRESSURE TRANSDUCER)

Adequate support of piping and proper mounting of switch should be made to avoid excessive shock or vibration. To minimize the effect of vibration on a switch, mount perpendicular to vibration. Connect piping or tubing to switch at base of transducer. It is recommended that flexible tubing be used whenever possible. Apply pipe compound sparingly to male pipe threads only. If applied to transducer threads, it may enter the transducer and cause operational difficulty. Pipe strain on switch should be avoided by proper support and alignment of piping. When tightening pipe, do not use switch as a lever. Wrenches applied to transducer body or piping are to be located as close as possible to connection point. **IMPORTANT: For steam service, install a condensate loop (pigtail or steam syphon tube) directly into the pressure transducer.**

CAUTION: To avoid damage to the transducer body, DO NOT OVERTIGHTEN PIPE CONNECTIONS. If TEFLON* tape, paste or similar lubricant is used, use extra care due to reduced friction.

IMPORTANT: To eliminate the effect of undesirable pressure fluctuations in the system, install a surge suppressor.

WIRING

Wiring must comply with local codes and the National Electrical Code. The general purpose switch enclosure is provided with a 7/8" diameter hole to accommodate 1/2" electrical hub or connector. It is recommended that a flexible conduit connection be used. If rigid conduit is used, do not consider it or use it as a means of supporting (mounting). For watertight switch enclosures, a watertight conduit hub must be installed in the 7/8" diameter hole; use conduit hub Part No. PP01 or equivalent. **IMPORTANT: Electrical load must be within range stated on nameplate. Failure to stay within the electrical range of the switch rating may result in damage to or premature failure of the electrical switch. Use No. 14 AWG copper wire rated for 60°C minimum. CAUTION: Do not exert excessive screwdriver force on snap switch when making terminal connections. When connections are made, be sure there is no stress on the wire leads. Either condition may cause malfunction of switch.**

Electrical Ratings For Standard & Suffix J or K Switches	
Ratings for Limit Controls and Pressure Operated Switches:	Ratings for Industrial Controls and Temperature Indicating and Regulating Equipment:
5 Amps Res., 125 or 250 VAC 1/8 HP or 90 Watts, 125 VAC 1/4 HP or 180 Watts, 250 VAC 1/2 Amp Res., 125 VDC 1/4 Amp Res., 250 VDC	15 Amps Res., 125 VAC 10 Amps Res., 250 VAC 1/8 HP or 90 Watts, 125 VAC 1/4 HP or 180 Watts, 250 VAC 1/2 Amp Res., 125 VDC 1/4 Amp Res., 250 VDC

SCHEMATIC FOR STANDARD AND SUFFIX "J" SWITCHES

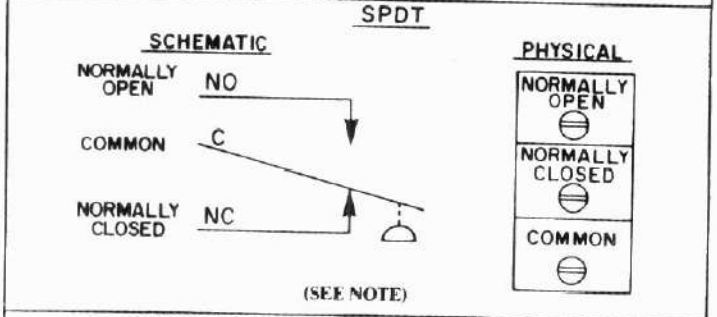

SCHEMATIC FOR SUFFIX "K" SWITCH (OPTIONAL)
DOUBLE POLE DOUBLE THROW

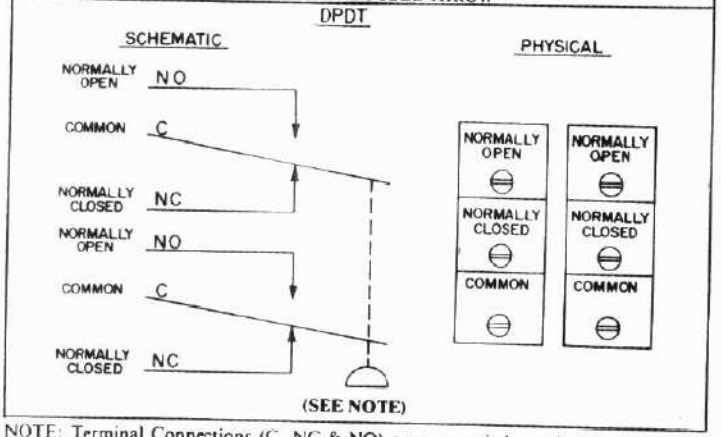

NOTE: Terminal Connections (C, NC & NO) on snap switch are located differently then shown in schematic above. Common "C" is located at the bottom. Normally Closed "NC" is located in the center. Normally Open "NO" is located at the top.

*DuPont Co. Registered Trademark

Form No. P7034 PRINTED IN MEXICO 1978 Automatic Switch Co. FLORHAM PARK, NEW JERSEY 07932

© Automatic Switch Co. 1978 ALL RIGHTS RESERVED

INSTALLATION OF TEMPERATURE TRANSDUCERS

(Refer to Figure 5)

DIRECT PROBE

The Direct Probe (local) Temperature Transducer is provided with 1/2 inch N.P.T. connection. When installing, do not use switch unit as a lever for tightening. Use wrenching flats provided at base of transducer for tightening.

CAPILLARY AND BULB

The Capillary and Bulb (remote) Temperature Transducers are provided with a length of capillary and a 3/8 inch diameter sensing bulb. CAUTION: Do not bend capillary at sharp angles. For proper operation, be sure sensing bulb is completely immersed in fluid and not in contact with heating element or anything that would directly affect the temperature of the fluid being sensed.

THERMAL WELL (Optional Feature)

A Thermal Well may be used for Capillary and Bulb (remote) or Direct Probe (local) Temperature Transducers. The thermal well affords protection for the sensing bulb and allows removal of the sensing bulb while maintaining a pressure-tight vessel. When installing sensing bulb in thermal well, be sure that it is fully inserted. Where a thermal well already exists, jam nuts may be obtained to adapt the capillary and bulb to the existing thermal well. The existing thermal well must be for a 3/8 diameter sensing bulb.

UNION CONNECTOR (Optional Feature)

A union connector will allow direct mounting of the sensing bulb in the fluid being [illegible]. Install union into piping connection before tightening union onto bulb. For maximum performance, the bulb should be inserted in the union connection so that the end of the sensing bulb is even with the end of the union connector nut. Do not apply excessive torque when tightening union connector nut.

ADJUSTMENT (SIGNAL SETTING) OF FIXED DEADBAND SWITCH

To make adjustments, (signal setting) a 1/4 inch wrench and a pressure or temperature gage (within suitable range) are required. If electrical connection (to line of final application) of the switch is not desirable, a battery powered test lamp or ohm meter may be used. Pressure, temperature or mechanical range scales should be used for initial signal setting. These will be accurate within 5%. Adjust switch until pointer is in the middle of the solid red line below the desired range. For exact signal setting, proceed as follows:

ADJUSTMENT (SIGNAL SETTING) OF NORMALLY CLOSED AND NORMALLY OPEN FIXED DEADBAND SWITCH, INCREASING SIGNAL (Refer to Figure 1)

1. If the fixed deadband switch is in the line of final application when adjustment (signal setting) is made, be sure switch can be test operated without affecting other equipment.
2. On general purpose and watertight constructions, remove switch cover.
3. Turn adjustment nut until signal setting indicator is fully up. Use a 1/4 inch wrench for adjusting nut. **CAUTION: Adjusting nut will turn easily until it hits a stop. Do not over torque; over torquing may cause damage.**
4. Follow steps in chart below to make signal setting.

Steps of Adjustment	Normally Closed		Normally Open	
	Electrical Connection To Switch	Position Of Test Lamp On-Off	Electrical Connection To Switch	Position Of Test Lamp On-Off
1. Starting with zero signal connect test lamp to common and . . .	Normally Closed Terminal	On	Normally Open Terminal	Off
2. Apply desired actuation signal. Then back off signal adjusting nut until switch actuates.	Normally Closed Terminal	Off (Switch Open)	Normally Open Terminal	On (Switch Closed)
3. Lower signal to check reactuation signal.	Normally Closed Terminal	On (Switch Closed)	Normally Open Terminal	Off (Switch Open)

5. Cycle between actuation and reactuation signals and make minor adjustment to nut as required to achieve the exact signal setting.
6. After setting has been made, make permanent electrical connections. **WARNING: Be sure power is off when electrical connections are made.**

ADJUSTMENT (SIGNAL SETTING) OF NORMALLY CLOSED AND NORMALLY OPEN FIXED DEADBAND SWITCH, DECREASING SIGNAL (Refer to Figure 1)

1. If the fixed deadband switch is in the line of final application when adjustment (signal setting) is made, be sure switch can be test operated without affecting other equipment.
2. On general purpose and watertight constructions, remove switch cover.
3. Turn adjustment nut until signal setting indicator is fully down. Use a 1/4 inch wrench for adjusting nut. **CAUTION: Adjusting nut will turn easily until it hits a stop. Do not over torque; overtorquing may cause damage.**
4. Follow steps in the chart below to make signal setting.

Steps of Adjustment	Normally Closed		Normally Open	
	Electrical Connection To Switch	Position Of Test Lamp On-Off	Electrical Connection To Switch	Position Of Test Lamp On-Off
1. Starting with initial signal above desired actuation setting, connect test lamp to common and . . .	Normally Closed Terminal	Off	Normally Open Terminal	On
2. Decrease signal to desired actuation signal. Then advance signal adjusting nut until switch actuates.	Normally Closed Terminal	On (Switch Closed)	Normally Open Terminal	Off (Switch Open)
3. Increase signal to check reactuation signal.	Normally Closed Terminal	Off (Switch Open)	Normally Open Terminal	On (Switch Closed)

5. Cycle between actuation and reactuation signals and make minor adjustment to nut as required to achieve the exact signal setting.
6. After setting has been made, make permanent electrical connections. **WARNING: Be sure power is off when electrical connections are made.**

TESTING OF INSTALLATION

If the adjustment of the switch has been made outside of the line of final application, the switch should be retested when installed in the line of final application. Follow adjustment instructions. Be sure switch can be test operated without affecting other equipment.

MAINTENANCE

WARNING: Turn off electrical power supply and line pressure to switch before removal or inspection.

IMPORTANT: Repair of the switch shall never be attempted in the field. The switch must be returned to the factory (Automatic Switch Company, Florham Park, New Jersey) or serviced only by an authorized factory representative. Address all service inquires to Automatic Switch Company, 50-56 Hanover Road, Florham Park, New Jersey 07932. The only adjustment which may be performed on the switch is changing the position of signal setting adjusting nut and replacement of the transducer unit. Replacement of transducer should be done if external leakage is evident.

PREVENTIVE MAINTENANCE

1. While in service, operate (cycle between two desired signals) the fixed deadband switch at least once a month to insure proper operation. If necessary, electrical wiring and pipe connection should be made so that switch can be test operated without affecting other equipment.
2. Periodic inspection of the switch, external surfaces only, should be carried out. Switch should be kept clean and free from paint, foreign matter, corrosion, icing and freezing conditions.
3. Keep the medium entering the switch as free from dirt and foreign material as possible.

IMPROPER OPERATION

Switch will not actuate or actuates and reactuates undesirably.

1. **Incorrect Electrical Connection:** Check leads to switch. Be sure they are properly connected. Switch is marked "NO" for Normally Open, "NC" for Normally Closed and "C" for Common.
2. **Faulty Control Circuit:** Check electrical power supply to switch. Check for loose or blown-out fuses, open-circuited or grounded wires, loose connections at terminal block or switch. See nameplate for electrical rating and range.
3. **Incorrect Pressure:** Check pressure in system with suitable pressure gage. Pressure must be within range specified on nameplate.
4. **Incorrect Adjustment:** Check adjusting nut for proper setting. Refer to adjustment instructions.
5. **External Leakage:** Check to see that bolts (4) holding transducer to pressure switch are properly torqued (80 ± 10 inch-pounds). If bolts are tight and leakage is still evident, replace transducer. Refer to paragraph on "Assembly of Switch Unit and Transducer Unit."
6. **Excessive Vibration or Surges Causing Switch to Actuate and Reactuate:** Check for fluctuations in system and install pressure surge suppressor. Check switch mounting and be sure there is no excess vibration.
7. **Incorrect Temperature:** Check temperature in system with suitable thermometer. Temperature must be within range specified on nameplate. Check location of capillary and bulb for incorrect mounting. Refer back to paragraphs on "Installation of Temperature Transducers."

If the operation of the fixed deadband switch cannot be corrected by the above means, the entire switch unit should be replaced or an authorized factory representative consulted.

FOR SERVICE, REPLACEMENT OR NEW TRANSDUCER

Consult Factory or Authorized Factory Representative or Distributors

ORDERING INFORMATION

For Fixed Deadband Switch or New Transducer

When Ordering, Specify Catalog Numbers, Fluid, Pressure Range, Temperature Range, Serial Numbers and Maximum Sustained Pressure or Temperature.

NAMEPLATES ARE LOCATED ON SWITCH COVER AND BOTTOM OF TRANSDUCER.

ASCO Automatic Switch Co. FLORHAM PARK, NEW JERSEY 07932 Form No. P7034 PRINTED IN U.S.A. 1978

© Automatic Switch Co. 1978. ALL RIGHTS RESERVED

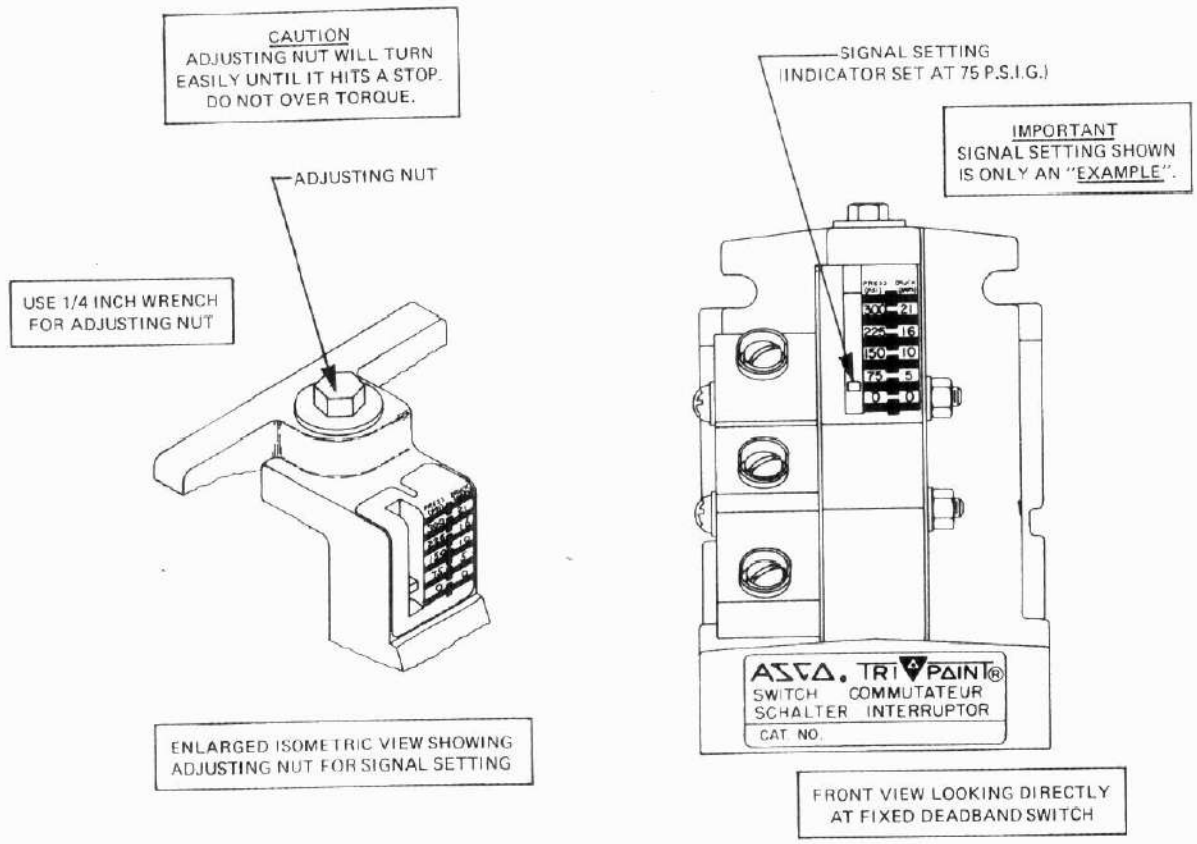

Figure 1. **Adjustment (Signal Setting) of Fixed Deadband Switch**

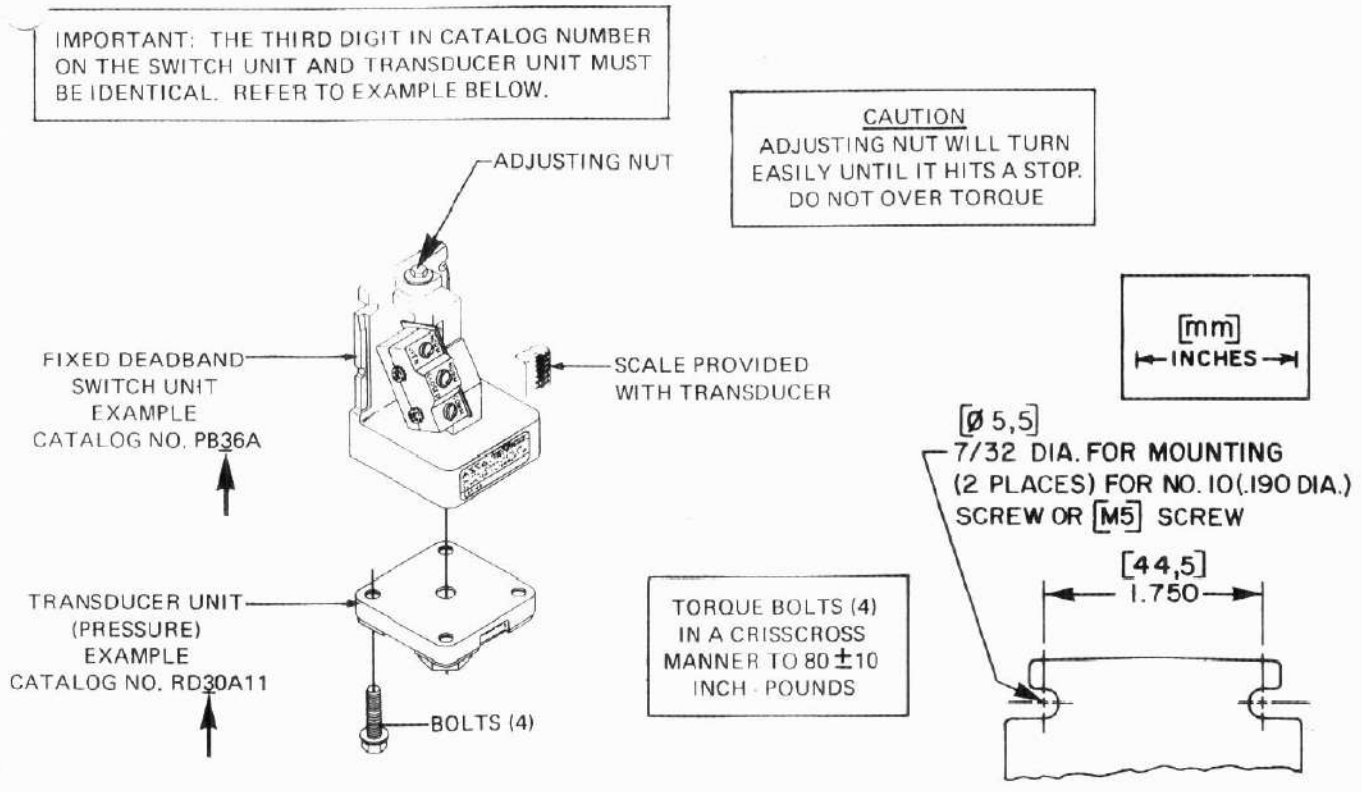

Figure 2. **Open Frame Switch and Mounting Dimensions (Switch Unit and Transducer Unit to be Assembled)**

© Automatic Switch Co. 1978, ALL RIGHTS RESERVED

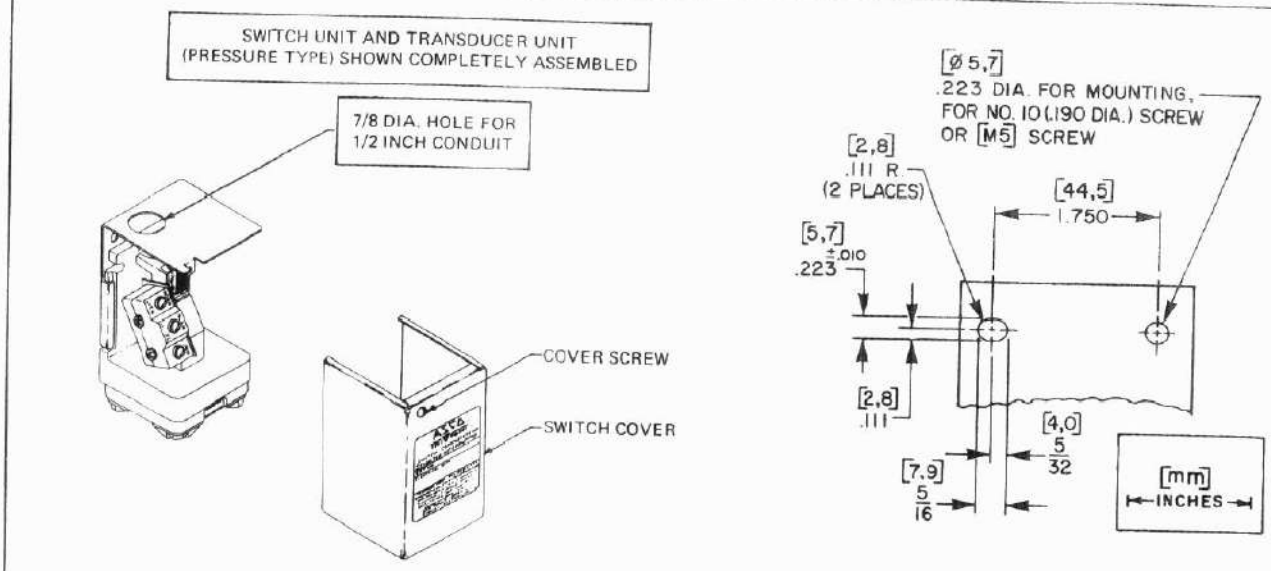

Figure 3. General Purpose Switch Enclosure With Mounting Dimensions

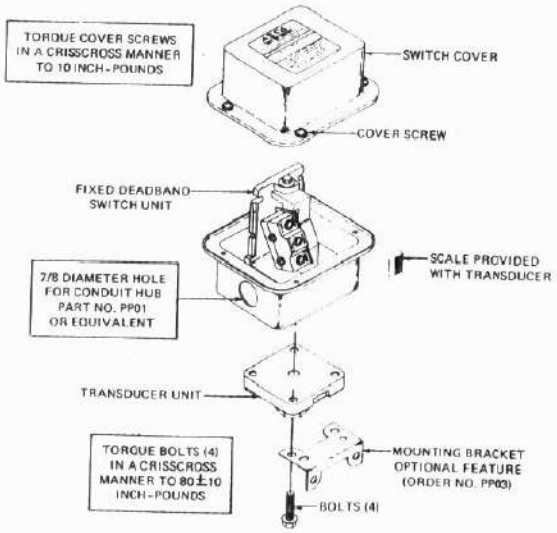

Figure 4. Watertight Switch Enclosure

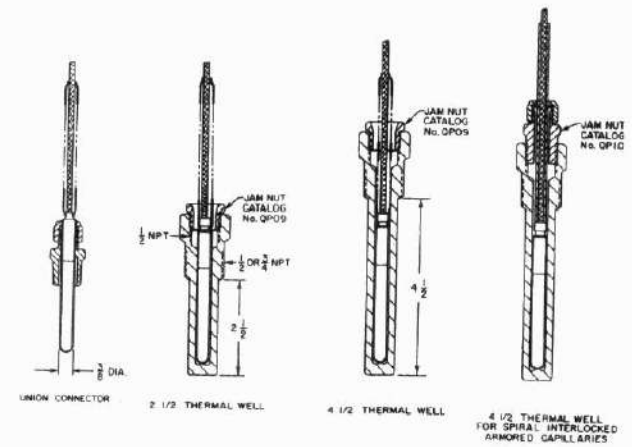

Figure 5. Union Connector and Thermal Wells (Optional Feature)

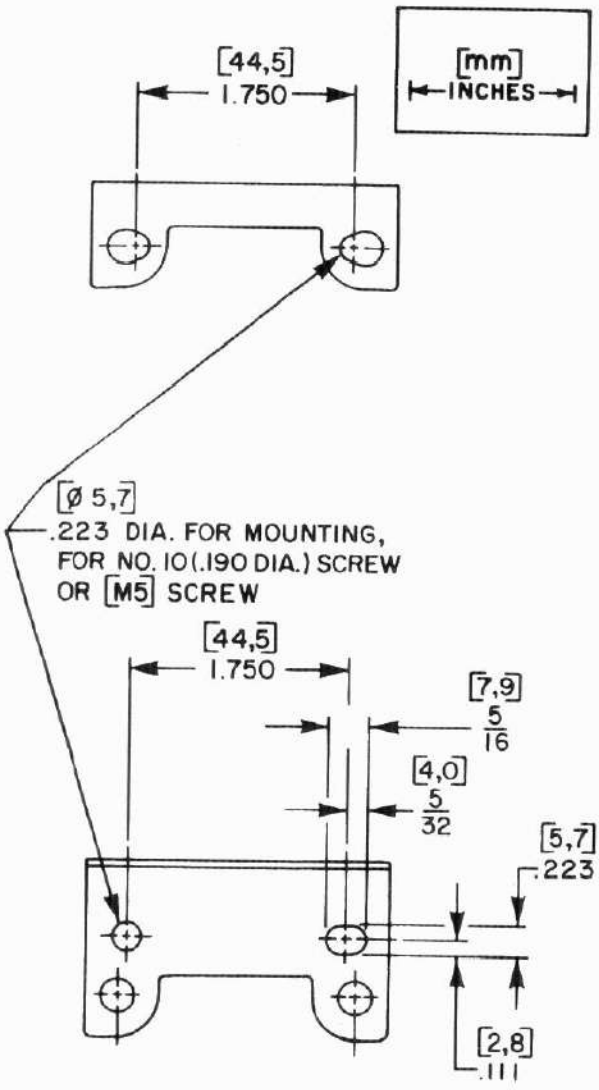

Figure 6. Mounting Bracket (Optional Feature)

ASCO
Automatic Switch Co. FLORHAM PARK, NEW JERSEY 07932 Form No. P7034 PRINTED IN U.S.A. 1978
© Automatic Switch Co. 1978, ALL RIGHTS RESERVED

INSTALLATION AND MAINTENANCE INSTRUCTIONS

2-WAY INTERNAL PILOT-OPERATED SOLENOID VALVES NORMALLY CLOSED OPERATION – 3/8 AND 1/2 NPT VALVES FOR LP GAS SYSTEMS

BULLETINS
8210
8211

ASCO

Form No. V6279

DESCRIPTION

Bulletin 8210 valves are 2-way internal pilot-operated solenoid valves designed for LP gas (propane) service. Valves are of forged brass construction. Standard valves have a TYPE 1, General Purpose Solenoid Enclosure.

Bulletin 8211 valves are the same as Bulletin 8210's except the solenoids are equipped with a combination Watertight & Explosion-Proof Solenoid Enclosure designed to meet Enclosure TYPE 4-Watertight, TYPE 7 (C & D) Explosion-Proof Class I, Groups C & D and TYPE 9 (E, F, & G)–Dust Ignition-Proof Class II, Groups E, F, & G. Installation and Maintenance Instructions for the Watertight & Explosion-Proof Solenoid Enclosure are provided on Form No. V5380.

OPERATION

Normally Closed: Valve is closed when solenoid is de-energized. Valve opens when solenoid is energized.

IMPORTANT: Minimum operating pressure differential is 5 psi.

INSTALLATION

Check nameplate for correct catalog number, pressure, voltage, and service.

POSITIONING

This valve is designed to perform properly when mounted in any position. However, for optimum life and performance, the solenoid should be mounted vertical and upright so as to reduce the possibility of foreign matter accumulating in the core tube area.

MOUNTING

For mounting bracket (optional feature) dimensions, refer to Figure 1.

PIPING

Connect piping to valve according to markings on valve body. Apply pipe compound sparingly to male pipe threads only; if applied to valve threads, it may enter the valve and cause operational difficulty. Pipe strain should be avoided by proper support and alignment of piping. When tightening the pipe, do not use valve as a lever. Wrenches applied to valve body or piping are to be located as close as possible to connection point.

IMPORTANT: For the protection of the solenoid valve, install a strainer or filter suitable for the service involved in the inlet side as close to the valve as possible. Periodic cleaning is required depending on the service conditions. See Bulletins 8600, 8601, and 8602 for strainers.

WIRING

Wiring must comply with Local and National Electrical Codes. Housings for all solenoids are made with connections or accommodations for 1/2 inch conduit. The general purpose solenoid enclosure may be rotated to facilitate wiring by removing the retaining cap or clip. CAUTION: When metal retaining clip disengages, it will spring upward. Rotate solenoid enclosure to desired position. Replace retaining cap or clip before operating.

SOLENOID TEMPERATURE

Standard catalog valves are supplied with coils designed for continuous duty service. When the solenoid is energized for a long period, the solenoid enclosure becomes hot and can be touched with the hand only for an instant. This is a safe operating temperature. Any excessive heating will be indicated by the smoke and odor of burning coil insulation.

MAINTENANCE

WARNING: Turn off electrical power supply and depressurize valve before making repairs.

NOTE: It is not necessary to remove the valve from the pipeline for repairs.

CLEANING

A periodic cleaning of all solenoid valves is desirable. The time between cleaning will vary depending on medium and service conditions. In general, if the voltage to the coil is correct, sluggish valve operation, excessive noise or leakage will indicate that cleaning is required. Clean valve strainer or filter when cleaning solenoid valve.

PREVENTIVE MAINTENANCE

1. Keep the medium flowing through the valve as free from dirt and foreign material as possible.
2. While in service, operate the valve at least once a month to insure proper opening and closing.
3. Periodic inspection (depending on medium and service conditions) of internal valve parts for damage or excessive wear is recommended. Thoroughly clean all parts. Replace any parts that are worn or damaged.

IMPROPER OPERATION

1. **Faulty Control Circuit:** Check the electrical system by energizing the solenoid. A metallic click signifies the solenoid is operating. Absence of the click indicates loss of power supply. Check for loose or blownout fuses, open-circuited or grounded coil, broken lead wires splice connections.
2. **Burned-Out Coil:** Check for open-circuited coil. Replace coil if necessary.
3. **Low Voltage:** Check voltage across the coil leads. Voltage must be at least 85% of nameplate rating.
4. **Incorrect Pressure:** Check valve pressure. Pressure to valve must be within range specified on nameplate.
5. **Excessive Leakage:** Disassemble valve and clean all parts. Replace worn or damaged parts with a complete Spare Parts Kit for best results.

COIL REPLACEMENT (Refer to Figure 2.)

Turn off electrical power supply and disconnect coil lead wires.

1. Remove retaining cap or clip, nameplate, and housing. CAUTION: When metal retaining clip disengages, it will spring upward.
2. Slip spring washer, insulating washer and coil off the solenoid base sub-assembly. Insulating washers are omitted when a molded coil is used.
3. Reassemble in reverse order of disassembly paying careful attention to exploded view provided for identification and placement of parts.

CAUTION: **The solenoid must be fully reassembled as the housing and internal parts are part of and complete the magnetic circuit. Be sure to replace insulating washer at each end of non-molded coil.**

ASCO Valves
FLORHAM PARK, NEW JERSEY 07932

© Automatic Switch Co. 1982 ALL RIGHTS RESERVED

Installation & Maintenance Instructions

2-WAY INTERNAL PILOT-OPERATED SOLENOID VALVES

NORMALLY CLOSED OPERATION - 3/4", 1", 1-1/4", 1-1/2" OR 2" NPT

SERIES 8215

Form No. V5996R3

IMPORTANT: See separate solenoid installation and maintenance instructions for information on: Wiring, Solenoid Temperature, Causes of Improper Operation, and Coil Replacement.

DESCRIPTION

Series 8215 valves are 2-way normally closed internal pilot-operated solenoid valves. Valve bodies are made of rugged aluminum with trim and internal parts made of steel and stainless steel. Series 8215 valves may be provided with a general purpose or explosionproof solenoid enclosure.

OPERATION

Normally Closed: Valve is closed when solenoid is de-energized; open when energized.

Note: No minimum operating pressure differential required.

INSTALLATION

⚠ CAUTION: Not all valves are approved for fuel gas service. Check nameplate for correct catalog number, pressure, voltage, frequency, and service. Never apply incompatible fluids or exceed pressure rating of the valve. Installation and valve maintenance to be performed by qualified personnel.

Future Service Considerations

Provision should be made for performing seat leakage, external leakage, and operational tests on the valve with a nonhazardous, noncombustible fluid after disassembly and reassembly.

Temperature Limitations

For maximum valve ambient and fluid temperatures, refer to chart below. Check catalog number prefix on nameplate to determine maximum temperatures.

Construction	Coil Class	Catalog Number Prefix	Max. Ambient Temp°F	Max. Fluid Temp°F
AC Construction	F	FT	125	125
	H	HT	140	140
DC Construction	B or H	None or HT	77	77

Positioning

Valve must be mounted with solenoid vertical and upright.

Piping

Connect piping to valve according to markings on valve body. Apply pipe compound sparingly to male pipe threads only. If applied to valve threads the compound may enter the valve and cause operational difficulty. Avoid pipe strain by properly supporting and aligning piping. When tightening the pipe, do not use valve or solenoid as a lever. Locate wrenches applied to valve body or piping as close as possible to connection point.

⚠ CAUTION: To avoid damage to the valve body, DO NOT OVERTIGHTEN PIPE CONNECTIONS. If Teflon* tape, paste, spray or similar lubricant is used, use extra care when tightening due to reduced friction.

IMPORTANT: To protect the solenoid valve, install a strainer or filter, suitable for the service involved, in the inlet side as close to the valve as possible. Clean periodically depending on service conditions. See ASCO Series 8600, 8601 and 8602 for strainers.

MAINTENANCE

⚠ WARNING: To prevent the possibility of severe personal injury or property damage, turn off electrical power, depressurize valve, extinguish all open flames and avoid any type of sparking or ignition. Vent hazardous or combustible fluid to a safe area before servicing the valve.

NOTE: It is not necessary to remove the valve from the pipeline for repairs.

Cleaning

All solenoid valves should be cleaned periodically. The time between cleanings will vary depending on the medium and service conditions. In general, if the voltage to the coil is correct, sluggish valve operation, excessive noise or leakage will indicate that cleaning is required. In the extreme case, faulty valve operation will occur and the valve may fail to open or close. Clean valve strainer or filter when cleaning the valve.

*Dupont's Registered Trademark

•Automatic Switch Co. MCMXCI All Rights Reserved

VALVE DISASSEMBLY (Refer to Figure 2.)

Depressurize valve and turn off electrical power supply. Proceed in the following manner:

1. Disassemble valve in an orderly fashion paying careful attention to exploded view provided for identification of parts.
2. Remove retaining cap or clip and slip the entire solenoid enclosure off the solenoid base sub-assembly. CAUTION: When metal retaining clip disengages, it will spring upward.
3. Unscrew solenoid base sub-assembly and remove bonnet gasket, core assembly, core spring and core guide.
4. Remove valve bonnet screws, valve bonnet, diaphragm assembly, and body gasket from valve body.
5. All parts are now accessible for cleaning or replacement. Replace worn or damaged parts with a complete Spare Parts Kit for best results.

VALVE REASSEMBLY

1. Reassemble in reverse order of disassembly paying careful attention to exploded view provided for identification and placement of parts.
2. Replace body gasket and diaphragm assembly in valve body. Locate the bleed hole in the diaphragm assembly approximately 45° from the valve outlet.
3. Replace valve bonnet and valve bonnet screws (4). Torque bonnet screws in a crisscross manner to 95 ± 10 inch-pounds [10,7 ± 1,1 newton meters].
4. Lubricate bonnet gasket with DOW CORNING® 111 Compound lubricant or an equivalent high-grade silicone grease.
5. Position bonnet gasket in valve bonnet.
6. Install core assembly, core spring and core guide in solenoid base sub-assembly. Engage this assembly into the valve bonnet. Torque solenoid base sub-assembly to 175 ± 25 inch-pounds [19,8 ± 2,8 newton meters].
7. Replace solenoid enclsoure and retaining cap or clip.
8. After maintenance, operate the valve a few times to be sure of proper opening and closing.

SPARE PARTS KITS

Spare Parts Kits and Coils are available for ASCO valves. Parts marked with an asterisk (*) are supplied in Spare Parts Kits.

ORDERING INFORMATION FOR SPARE PARTS KITS

When Ordering Spare Parts Kits or Coils, Specify Valve Catalog Number, Serial Number, Voltage and Hertz.

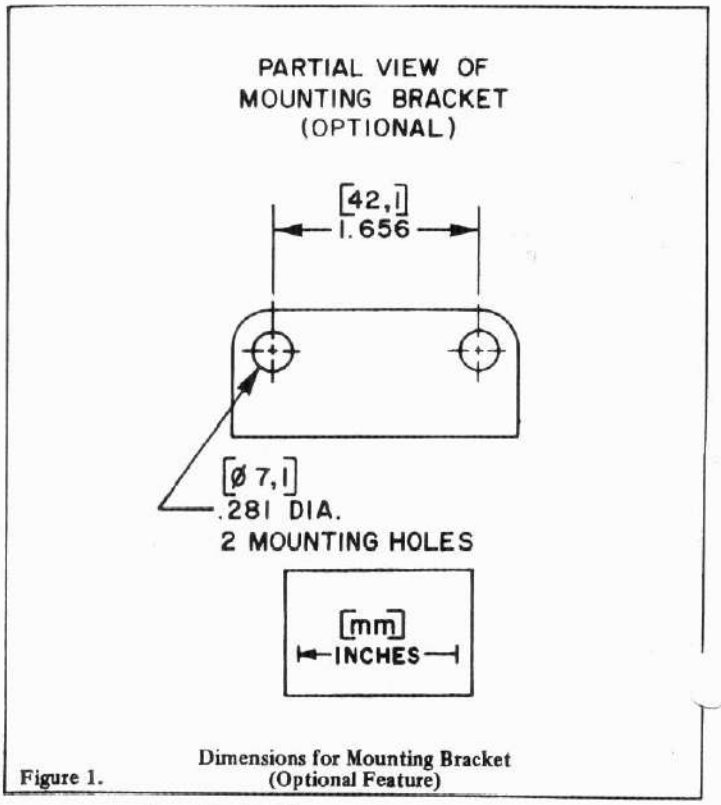

Figure 1. Dimensions for Mounting Bracket (Optional Feature)

ASCO Valves
Automatic Switch Co. FLORHAM PARK, NEW JERSEY 07932 Form No. V6279 1982

© Automatic Switch Co. 1982 ALL RIGHTS RESERVED

INSTALLATION AND MAINTENANCE INSTRUCTIONS

2-WAY INTERNAL PILOT OPERATED SOLENOID VALVES NORMALLY CLOSED OPERATION — 3/4 N.P.T. VALVES FOR LP GAS SYSTEMS

BULLETINS
8210
8211

ASCO

FORM NO. V-5963

DESCRIPTION

Bulletin 8210 valves are 2-way, normally closed internal pilot operated solenoid valves designed for LP gas (propane) service. Valves are of brass construction.

Bulletin 8211 valves are the same as Bulletin 8210 except the solenoids are equipped with an enclosure which is designed to meet NEMA Type 4 - Watertight, NEMA Type 7 (C or D) Hazardous Locations - Class I Groups C or D and NEMA Type 9 (E, F or G) Hazardous Locations - Class II, Groups E, F or G. Installation and Maintenance Instructions for the Explosion-Proof/Watertight Solenoid Enclosures are provided on Form No. V-5380.

OPERATION

Normally Closed: Valve is closed when solenoid is de-energized. Valve opens when solenoid is energized.

IMPORTANT: Minimum operating pressure differential is 5 psi.

INSTALLATION

Check nameplate for correct catalog number, pressure, voltage and service.

POSITIONING/MOUNTING (Refer to Figure 1)

This valve is designed to perform properly when mounted in any position. However, for optimum life and performance, the solenoid should be mounted vertical and upright so as to reduce the possibility of foreign matter accumulating in the core tube area. For mounting bracket (optional feature) dimensions, refer to Figure 1.

PIPING

Connect piping to valve according to markings on valve body. Apply pipe compound sparingly to male pipe threads only; if applied to valve threads, it may enter valve and cause operational difficulty. Pipe strain should be avoided by proper support and alignment of piping. When tightening pipe, do not use valve as a lever. Wrenches applied to valve body or piping are to be located as close as possible to connection point.

IMPORTANT: For the protection of the solenoid valve, install a strainer or filter suitable for the service involved in the inlet side as close to the valve as possible. Periodic cleaning is required, depending on service conditions. See Bulletins 8600, 8601 and 8602 for strainers.

WIRING

Wiring must comply with Local and National Electrical Codes. Housings for all solenoids are made with connections for 1/2 inch conduit. The general purpose solenoid enclosure may be rotated to facilitate wiring by removing the retaining cap or clip. **CAUTION: When metal retaining clip disengages, it will spring upward.** Rotate to desired position. Replace retaining cap or clip before operating.

SOLENOID TEMPERATURE

Standard catalog valves are supplied with coils designed for continuous duty service. When the solenoid is energized for a long period, the solenoid enclosure becomes hot and can be touched with the hand only for an instant. This is a safe operating temperature. Any excessive heating will be indicated by the smoke and odor of burning coil insulation.

MAINTENANCE

WARNING: Turn off electrical power supply and depressurize valve before making repairs. It is not necessary to remove the valve from the pipe line for repairs.

CLEANING

A periodic cleaning of all solenoid valves is desirable. The time between cleanings will vary depending on media and service conditions. In general, if the voltage to the coil is correct, sluggish valve operation, excessive noise or leakage will indicate that cleaning is required. Clean valve strainer or filter when cleaning solenoid valve.

PREVENTIVE MAINTENANCE

1. Keep the medium flowing through the valve as free from dirt and foreign material as possible.
2. While in service, operate the valve at least once a month to insure proper opening and closing.
3. Periodic inspection (depending on media and service conditions) of internal valve parts for damage or excessive wear is recommended. Thoroughly clean all parts. Replace any parts that are worn or damaged.

IMPROPER OPERATION

1. **Faulty Control Circuit:** Check the electrical system by energizing the solenoid. A metallic click signifies the solenoid is operating. Absence of the click indicates loss of power supply. Check for loose or blown-out fuses, open-circuited or grounded coil, broken lead wires or splice connections.
2. **Burned-Out Coil:** Check for open-circuited coil. Replace coil if necessary.
3. **Low Voltage:** Check voltage across the coil leads. Voltage must be at least 85% of nameplate rating.
4. **Incorrect Pressure:** Check valve pressure. Pressure to valve must be within range specified on nameplate.
5. **Excessive Leakage:** Disassemble valve and clean all parts. Replace worn or damaged parts with a complete Spare Parts Kit for best results.

COIL REPLACEMENT (Refer to Figure 1)

Turn off electrical power supply and disconnect coil lead wires.

1. Remove retaining cap or clip, nameplate and cover. **CAUTION: When metal retaining clip disengages, it will spring upward.**
2. Slip spring washer, insulating washer and coil off the solenoid base sub-assembly. Insulating washers are omitted when a molded coil is used.
3. Reassemble in reverse order of disassembly paying careful attention to exploded view provided for identification and placement of parts.

CAUTION: The solenoid must be fully reassembled as the housing and internal parts are part of and complete the magnetic circuit. Place an insulating washer at each end of coil, if required.

VALVE DISASSEMBLY AND REASSEMBLY (Refer to Figure 1)

Depressurize valve and turn off electrical power supply. Proceed in the following manner:

1. Remove retaining cap or clip and slip the entire solenoid enclosure off the solenoid base sub-assembly. **CAUTION: When metal retaining clip disengages, it will spring upward.**
2. Unscrew solenoid base sub-assembly and remove bonnet gasket and core assembly with core spring and core guide attached.
3. Remove bonnet screws (4), valve bonnet, diaphragm spring, diaphragm assembly, body gasket and body passage gasket.
4. All parts are now accessible for cleaning or replacement. Replace worn or damaged parts with a complete Spare Parts Kit for best results.
5. Reassemble in reverse order of disassembly paying careful attention to exploded view provided for identification and placement of parts.
6. Torque bonnet screws in a crisscross manner to 130 ± 15 inch-pounds.
7. Torque solenoid base sub-assembly to 175 ± 25 inch-pounds.
8. After maintenance, operate the valve a few times to be sure of proper operation.

SPARE PARTS KITS

Spare Parts Kits and Coils are available for ASCO valves. Parts marked with an asterisk (*) are supplied in Spare Parts Kits.

ORDERING INFORMATION FOR SPARE PARTS KITS

When Ordering Spare Parts Kits or Coils, Specify Valve Catalog Number, Serial Number and Voltage.

Form No. V-5963 PRINTED IN U.S.A. 1977 Automatic Switch Co.

ASCO Valves
FLORHAM PARK, NEW JERSEY 07932

© Automatic Switch Co. 1977 ALL RIGHTS RESERVED

Preventive Maintenance

- Keep the medium flowing through the valve as free from dirt and foreign material as possible.
- While in service, the valve should be operated at least once a month to insure proper opening and closing.
- Depending on the medium and service conditions, periodic inspection of internal valve parts for damage or excessive wear is recommended. Thoroughly clean all parts. If parts are worn or damaged, install a complete ASCO Rebuild Kit.

Causes of Improper Operation

- **Incorrect Pressure:** Check valve pressure. Pressure to valve must be within range specified on nameplate.
- **Excessive Leakage:** Disassemble valve and clean all parts. If parts are worn or damaged, install a complete ASCO Rebuild Kit.

Valve Disassembly

⚠ WARNING: To prevent the possibility of severe personal injury or property damage, turn off electrical power, depressurize valve, extinguish all open flames and avoid any type of sparking or ignition. Vent hazardous or combustible fluid to a safe area before servicing the valve.

NOTE: Determine valve construction AC (Figure 1 on page 3) or DC (Figure 2 on page 4) then proceed as follows:

1. Remove solenoid enclosure, see separate installation and maintenance instructions.
2. For AC Construction, unscrew solenoid base sub–assembly. For DC Construction, unscrew solenoid base sub–assembly with special wrench adapter provided in ASCO Rebuild Kit. For wrench adapter only, order kit No.K218–949. NOTE: For alternate type open end wrench, order kit No.K168–146–1 which is available for solenoid base sub–assembly removal or replacement.
3. Remove bonnet screws, valve bonnet, bonnet gasket, core/diaphragm sub–assembly and body gasket.
4. All parts are now accessible to clean or replace. If parts are worn or damaged, install a complete ASCO Rebuild kit.

Valve Reassembly

1. Lubricate bonnet gasket and body gasket with a light coat of DOW CORNING® 200 Fluid lubricant or an equivalent high–grade silicone fluid.
2. Apply a light coat of RemGrit TFL 50® Dry Lubricant to:
   - Valve seat
   - Valve body flange where diaphragm assembly contacts the valve body and body gasket.
   - Internal surface of valve bonnet where diaphragm assembly contacts bonnet when valve is in the energized (open position).

IMPORTANT: If valve has been disassembled for inspection and cleaning only and a Rebuild Kit is not being installed, lubricate the following with RemGrit TFL 50® Dry Lubricant:

- Diaphragm assembly on both sides.
- Main disc at base of core/diaphragm sub–assembly.
- Pilot disc at base of core assembly.

⚠ CAUTION: Do not distort hanger spring between core assembly and diaphragm assembly when lubricating pilot disc.

3. Replace body gasket and core/diaphragm sub–assembly with closing spring attached. Locate bleed hole in core/diaphragm sub–assembly approximately 30° from the valve inlet.
4. Replace valve bonnet and bonnet screws (6). Torque screws in a crisscross manner to 100 ± 10 in–lbs [11,3 ± 1,1 Nm].
5. For AC construction, replace bonnet gasket and solenoid base sub–assembly. For DC construction refer to separate "Solenoid Installation and Maintenance Instructions" for lubrication instructions; then install bonnet gasket, housing and solenoid base sub–assembly. Torque solenoid base sub–assembly to 175 ± 25 in–lbs [19,8 ± 2,8 Nm].
6. Replace solenoid (see separate instructions) and make electrical hookup.

⚠ WARNING: To prevent the possibility of severe personal injury or property damage, check valve for proper operation before returning to service. Also perform internal seat and external leakage tests with a nonhazardous, noncombustible fluid.

7. Restore line pressure and electrical power supply to valve.
8. After maintenance is completed, operate the valve a few times to be sure of proper operation. A metallic *click* signifies the solenoid is operating.

ORDERING INFORMATION FOR ASCO REBUILD KITS

Parts marked with an asterisk (*) in the exploded views are supplied in Rebuild Kits.

• When Ordering Rebuild Kits for ASCO Valves, order the Rebuild Kit number stamped on the valve nameplate. +

+ If the number of the kit is not visible, order by indicating the number of kits required, and the Catalog Number and Serial Number of the valve(s) for which they are intended.

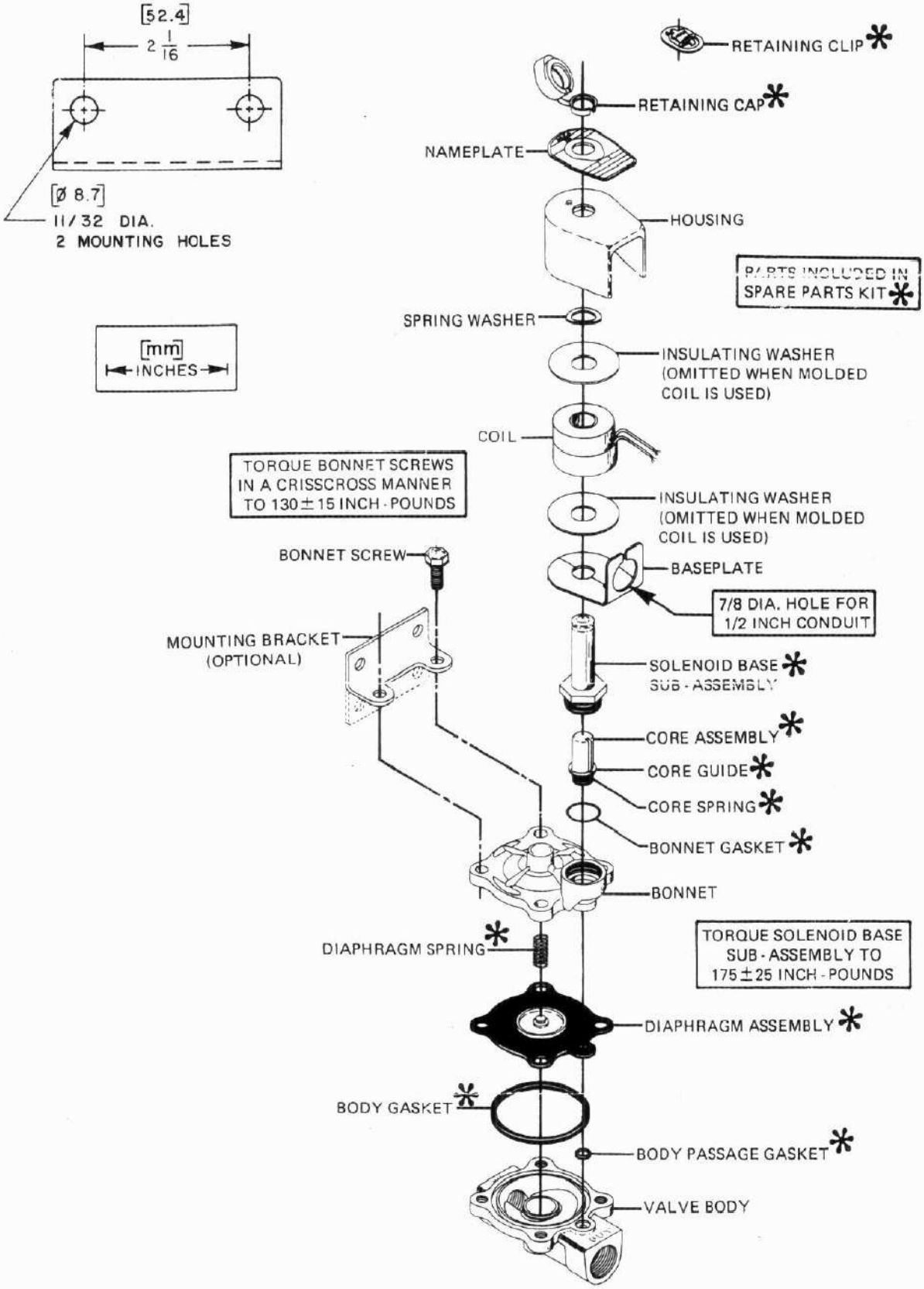

Figure 1.

Bulletin 8210

ASCO Valves
Automatic Switch Co. FLORHAM PARK, NEW JERSEY 07932 Form No. V-5963 PRINTED IN U.S.A. 1977

Torque Chart

Part Name	Torque Value in Inch-Pounds	Torque Value in Newton-Meters
Solenoid Base Sub-Assembly	175 ± 25	19,8 ± 2,8
Bonnet Screws	100 ± 10	11,3 ±1,1

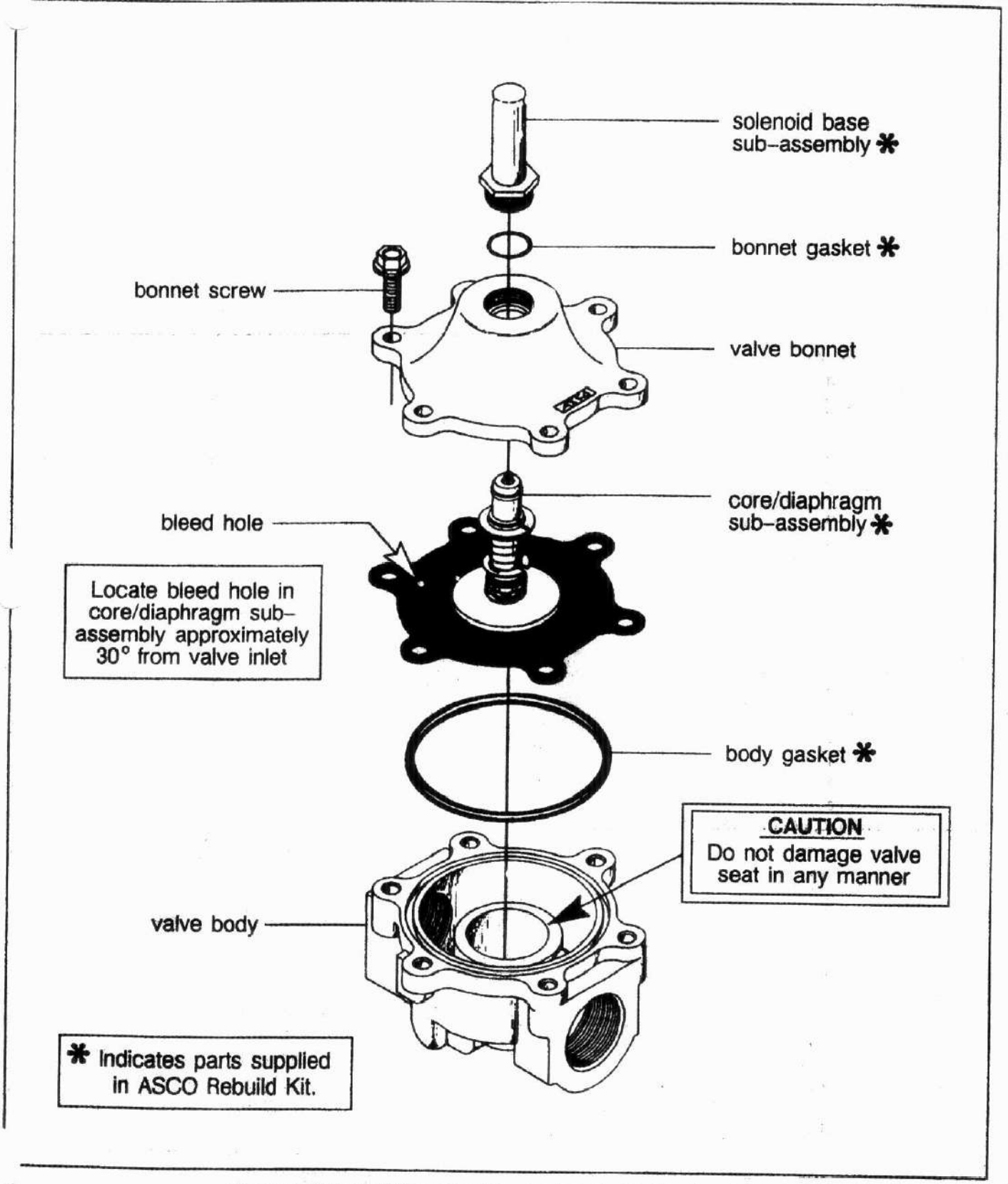

Figure 1. Series 8215 valves without solenoid, AC Construction.

Torque Chart

Part Name	Torque Value in Inch-Pounds	Torque Value in Newton Meters
Solenoid Base Sub-Assembly	175 ± 25	19,8 ± 2,8
Bonnet Screws	100 ± 10	11,3 ±1,1

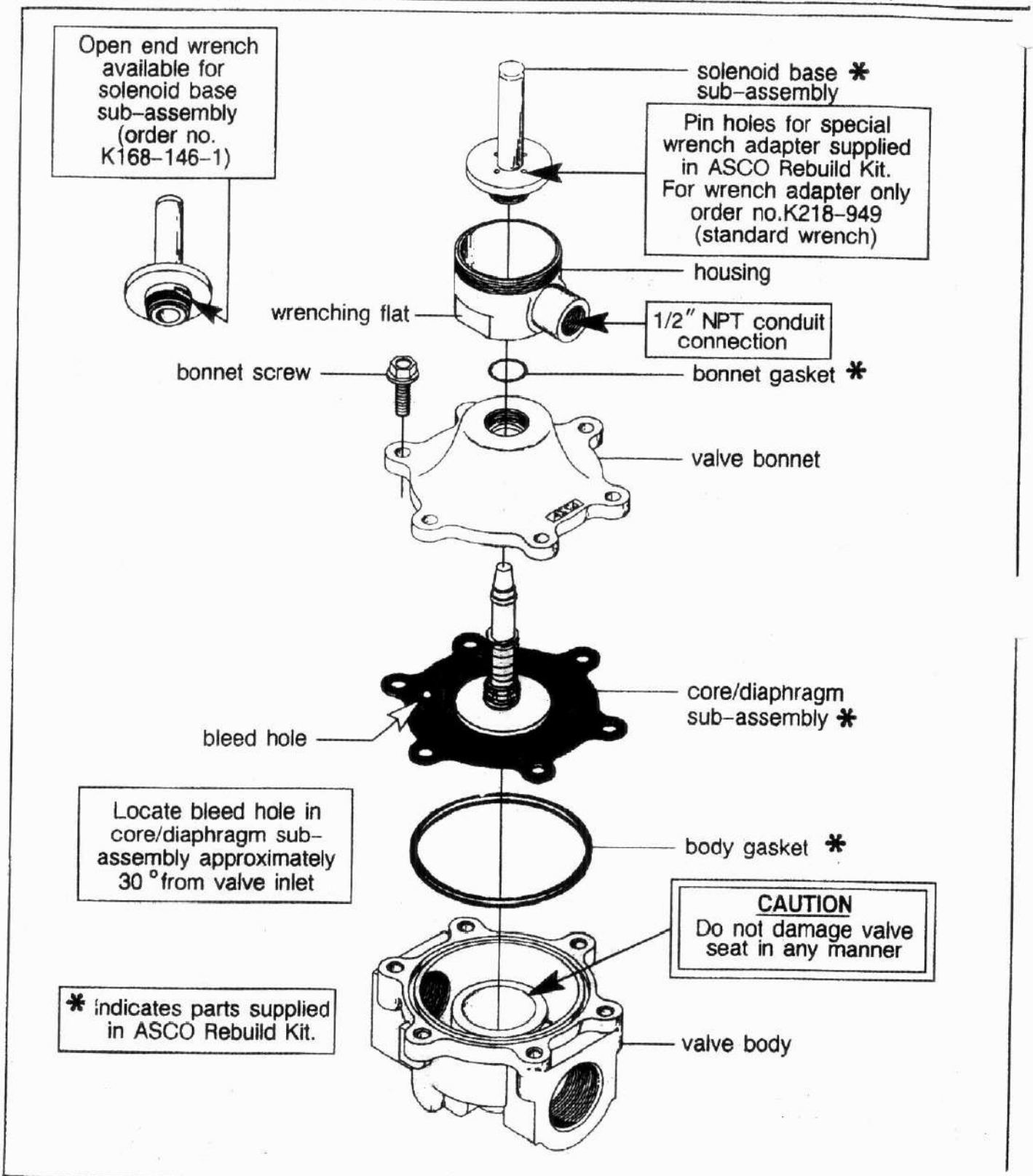

Figure 2. Series 8215 valves without solenoid, DC Construction.

Form No. V5996R3

Installation & Maintenance Instructions

GENERAL PURPOSE AND RAINTIGHT/WATERTIGHT/EXPLOSIONPROOF SOLENOIDS

SERIES 8017

Form No.V5381R6

IMPORTANT: See separate valve installation and maintenance instructions for information on: Operation, Positioning, Mounting, Cleaning, Preventive Maintenance, Causes of Improper Operation, Disassembly and Reassembly of basic valve.

DESCRIPTION

Solenoid Catalog Numbers 80171 and 80172 have a Type 1, General Purpose Solenoid Enclosure. Solenoid Catalog Numbers EF80171, EF80172, 80173, and 80174 meet the requirements of Enclosure Type 3 – Raintight, Type 7 (C & D) Explosionproof, and Type 9 (E, F, & G) Dust – Ignitionproof. When constructed with a cover gasket and solenoid bonnet gasket they also meet the requirement of Enclosure Type 4 – Watertight. Series 8017 solenoids (when installed as a solenoid and not as part of an ASCO valve) are supplied with a core which has a 0.250 – 28 UNF – 2B tapped hole, with 0.38 inch minimum full thread.

OPERATION

When the solenoid is energized, the core is drawn into the solenoid base sub–assembly.

IMPORTANT: When the solenoid is de–energized, the initial return force for the core, whether developed by spring, pressure, or weight, must exert a minimum force to overcome residual magnetism created by the solenoid. Minimum return force for AC construction is 1 pound, 12 ounces and 5 ounces for DC construction.

INSTALLATION

Check nameplate for correct catalog number, voltage, frequency, wattage, and service.

Enclosure Types 3, 4, 7, and 9

⚠ CAUTION: To prevent fire or explosion, do not install solenoid enclosure and/or valve where ignition temperature of hazardous atmosphere is less than 160° C. On valves used for steam service or when a class "H" solenoid is used, do not install in hazardous atmosphere where ignition temperature is less than 180°C. See nameplate for service.

Enclosure Types 3,4,7, and 9 Used in –40°C Ambient Temperature Applications

⚠ WARNING: To prevent fire or explosion, use only conduit runs 1/2" in size with a sealing fitting connected within 3 feet of the solenoid enclosure.

IMPORTANT: To protect the solenoid operator or valve, install a strainer or filter, suitable for the service involved in the inlet side as close to the valve or operator as possible. Clean periodically depending on service conditions.

Positioning

This solenoid is designed to perform properly when mounted in any position. However, for optimum life and performance, the solenoid should be mounted vertically and upright to reduce the possibility of foreign matter accumulating in the solenoid base sub–assembly area.

Wiring

Wiring must comply with local codes and the National Electrical Code.

⚠ CAUTION: Do not use the solenoid enclosure as a splice box.

The general purpose solenoid housing has a 7/8" diameter hole to accommodate 1/2" conduit. To facilitate wiring, the general purpose solenoid enclosure may be rotated 360° by removing the retaining cap or clip.

⚠ CAUTION: When metal retaining clip disengages, it will spring upward.

Rotate solenoid enclosure to desired position. Then replace retaining cap or clip before operating. On some solenoids, a grounding wire which is green or green with yellow stripes is provided. Use rigid metallic conduit to ground all enclosures not provided with a green grounding wire. For the raintight/watertight/ explosionproof solenoid enclosure, electrical fittings must be approved for use in hazardous locations. This enclosure has a 1/2" conduit connection and may be rotated 360° to facilitate wiring.

⚠ WARNING: To prevent the possibility of personal injury or property damage from accidental disengagement of solenoid from valve body, hold housing securely by wrenching flats while removing or replacing housing cover.

To rotate enclosure, loosen housing cover using a 1" socket wrench. Two wrenching flats are provided on the housing to hold it securely in place while the cover is being loosened or tightened. Rotate housing to desired position and tighten cover before operating. Torque cover to 135 ± 15 in–lbs [15,3 ± 1,7 Nm].

NOTE: Alternating current (AC) and direct current (DC) solenoids are built differently. To convert from one to the other, it is necessary to change the complete solenoid including the core and solenoid base sub–assembly, not just the coil. Consult ASCO.

Solenoid Enclosure Assembly

Solenoid Catalog Numbers 80171 and 80172 may be assembled as a complete unit. Tightening is accomplished by means of a hex flange at the base of the solenoid enclosure.

Solenoid Catalog Numbers EF80171, EF80172, 80173, and 80174 must be assembled in the following manner:

1. The solenoid enclosure must be completely disassembled. For disassembly, see the instructions given in ***Coil Replacement*** section.
2. After disassembly, the solenoid base sub–assembly is placed inside the housing over the assembly location.
3. The assembly is then tightened in place by means of two (2) slots in the bonnet adjacent to the tube on the solenoid base sub–assembly. Use special adapter wrench provided with solenoid. For ASCO wrench kit only, Order No.K218950. Exercise care during tightening procedure to prevent deforming or raising of bonnet surface adjacent to slots.
4. Reassemble solenoid,follow instructions in ***Coil Replacement*** section.

Solenoid Temperature

Standard solenoids are supplied with coils designed for continuous duty service. When the solenoid is energized for a long period, the solenoid enclosure becomes hot and can be touched by hand only for an instant. This is a safe operating temperature. Any excessive heating will be indicated by the smoke and odor of burning coil insulation.

MAINTENANCE

⚠ WARNING: To prevent the possibility of personal injury or property damage, turn off electrical power, depressurize solenoid operator or valve, and vent fluid to a safe area before servicing.

Cleaning

All solenoid operators and valves should be cleaned periodically. The time between cleaning will vary depending on medium and service conditions. In general, if the voltage to the coil is correct, sluggish valve operation, excessive noise or leakage will indicate that cleaning is required. Clean strainer or filter when cleaning the valve.

Preventive Maintenance

- Keep the medium flowing through the solenoid operator or valve as free from dirt and foreign material as possible.
- While in service, the solenoid operator or valve should be operated at least once a month to ensure proper opening and closing.
- Depending on the medium and service conditions, periodic inspection of internal valve parts for damage or excessive wear is recommended. Thoroughly clean all parts. Replace any parts that are worn or damaged.

© Automatic Switch Co. MCMXCII. All Rights Reserved

Causes of Improper Operation

- **Faulty Control Circuit:** Check the electrical system by energizing the solenoid. A metallic *click* indicates loss of power supply. Check for loose or blown fuses, open–circuited or grounded coil, broken lead wires or splice connections.
- **Burned–Out Coil:** Check for open–circuited coil. Replace if necessary. Check supply voltage; it must be the same as specified on nameplate and as marked on the coil.
- **Low Voltage:** Check voltage across the coil leads. Voltage must be at least 85% of nameplate rating.

Coil Replacement for Solenoid Catalog Numbers 80171 and 80172 General Purpose Enclosure

1. Disconnect coil lead wires and grounding wire if present.
2. Remove retaining cap or clip from top of solenoid.

⚠ **CAUTION: When metal retaining clip disengages, it will spring upward.**

3. Remove nameplate (if present), cover, and spring washer (alternate construction only).
4. For AC construction, slip yoke containing coil, sleeves, insulating washers, and grounding wire (if present,) off solenoid base sub–assembly. For DC construction, slip grounding wire (if present), flux washer and coil off the solenoid base sub–assembly.
   NOTE: Insulating washers are omitted when a molded coil is used.
5. Coil is now accessible for replacement.

⚠ **CAUTION: Solenoid must be fully reassembled because the housing and internal parts complete the magnetic circuit. Place an insulating washer at each end of non–molded coil.**

Coil Replacement for Solenoid Catalog Numbers EF80171, EF80172, 80173, and 80174 Raintight/ Watertight/Explosionproof Enclosure

1. Disconnect coil lead wires and grounding wire if present.

⚠ **WARNING: To prevent the possibility of personal injury or property damage from accidental disengagement of solenoid from valve body, hold housing securely by wrenching flats while removing or replacing housing cover.**

2. Unscrew housing cover with cover gasket and nameplate attached. Two wrenching flats are provided to hold the housing securely in place while the cover is being loosened or tightened.
   NOTE: Some older solenoid constructions do not have a cover gasket or solenoid bonnet gasket present.
3. Remove retainer from top of solenoid base sub–assembly.
4. For AC construction, slip yoke containing coil, sleeves, insulating washers, and grounding wire, (if present) off the solenoid base sub–assembly. For DC construction, remove grounding wire (if present), yoke, insulating washer, coil and insulating washer.
   NOTE: Insulating washers are omitted when a molded coil is used.
5. Coil is now accessible for replacement.
6. If additional disassembly is required, unscrew solenoid base sub–assembly using special wrench adapter supplied in ASCO Enclosure or Rebuild Kit. For ASCO wrench kit only, Order No.K218950.
7. Remove solenoid base sub–assembly with solenoid bonnet gasket.
8. Reassemble using exploded view for identification and placement of parts. Before reassembly, see note below for cleaning and greasing requirements.
9. Torque solenoid base sub–assembly to 175 ± 25 in–lbs [19, 8 ± 2, 8 Nm].
10. Torque housing cover to 135 ± 15 in–lbs [15,3 ± 1,7 Nm].

⚠ **CAUTION: Solenoid must be fully reassembled because the housing and internal parts complete the magnetic circuit. Place an insulating washer at each end of non–molded coil.**

NOTE: Solenoid Catalog Numbers EF80171, EF80172, 80173, and 80174—Installation and maintenance of raintight/watertight/explosionproof equipment requires more than ordinary care to insure safe performance. All finished surfaces of the solenoid are constructed to provide flame–proof seal. Be sure that the surfaces are wiped clean before reassembling. Grease the cover gasket, solenoid bonnet gasket, and the joints of the raintight/watertight/explosionproof solenoid enclosure with DOW CORNING® 111 Compound lubricant or an equivalent high–grade silicone grease. Grease all joints thoroughly including the underside of the solenoid base sub–assembly flange and internal threads of the housing cover.

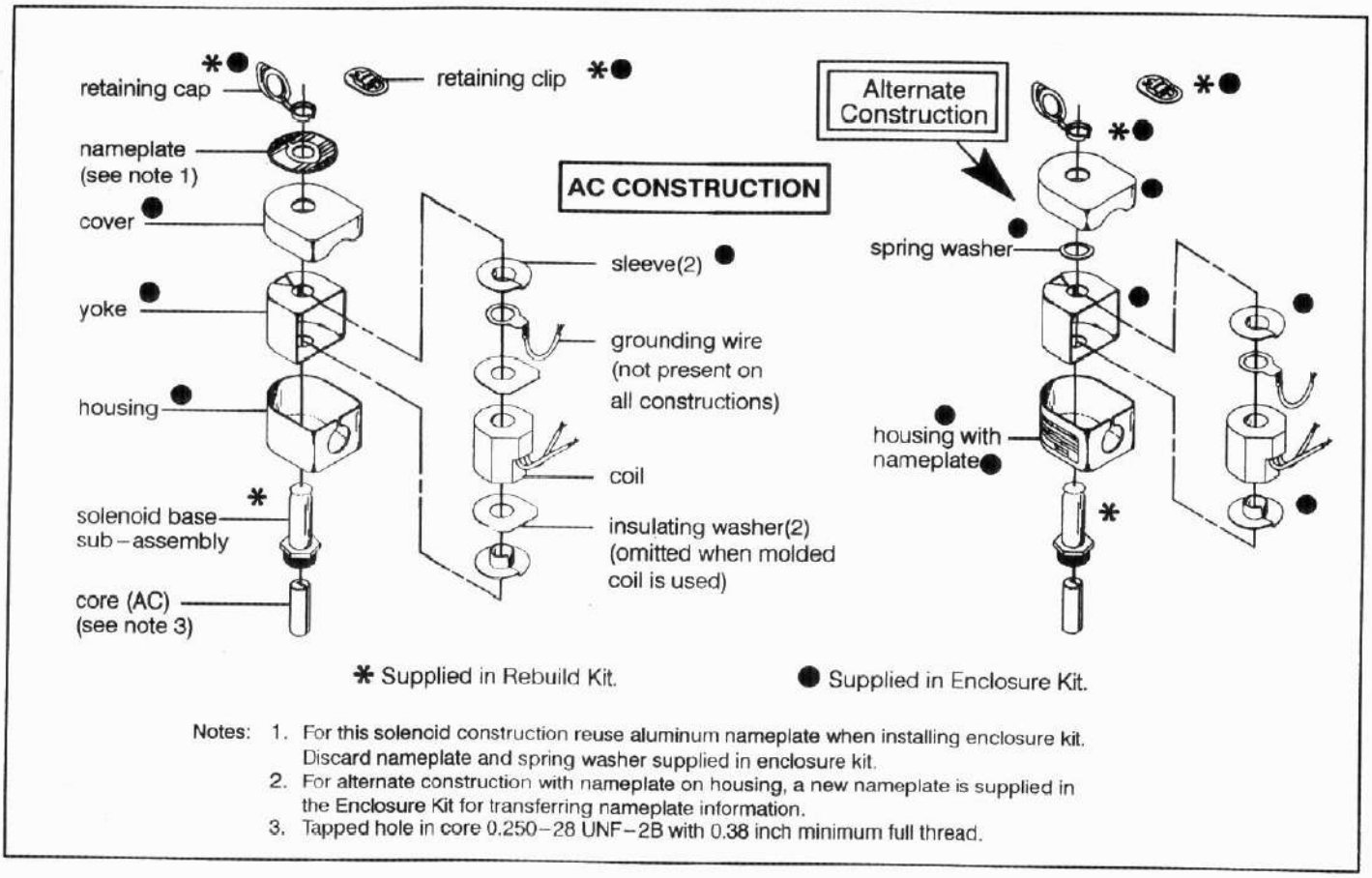

Notes:
1. For this solenoid construction reuse aluminum nameplate when installing enclosure kit. Discard nameplate and spring washer supplied in enclosure kit.
2. For alternate construction with nameplate on housing, a new nameplate is supplied in the Enclosure Kit for transferring nameplate information.
3. Tapped hole in core 0.250–28 UNF–2B with 0.38 inch minimum full thread.

Figure 1. Catalog Nos. 80171 and 80172 General Purpose Solenoid Enclosure, AC Construction.

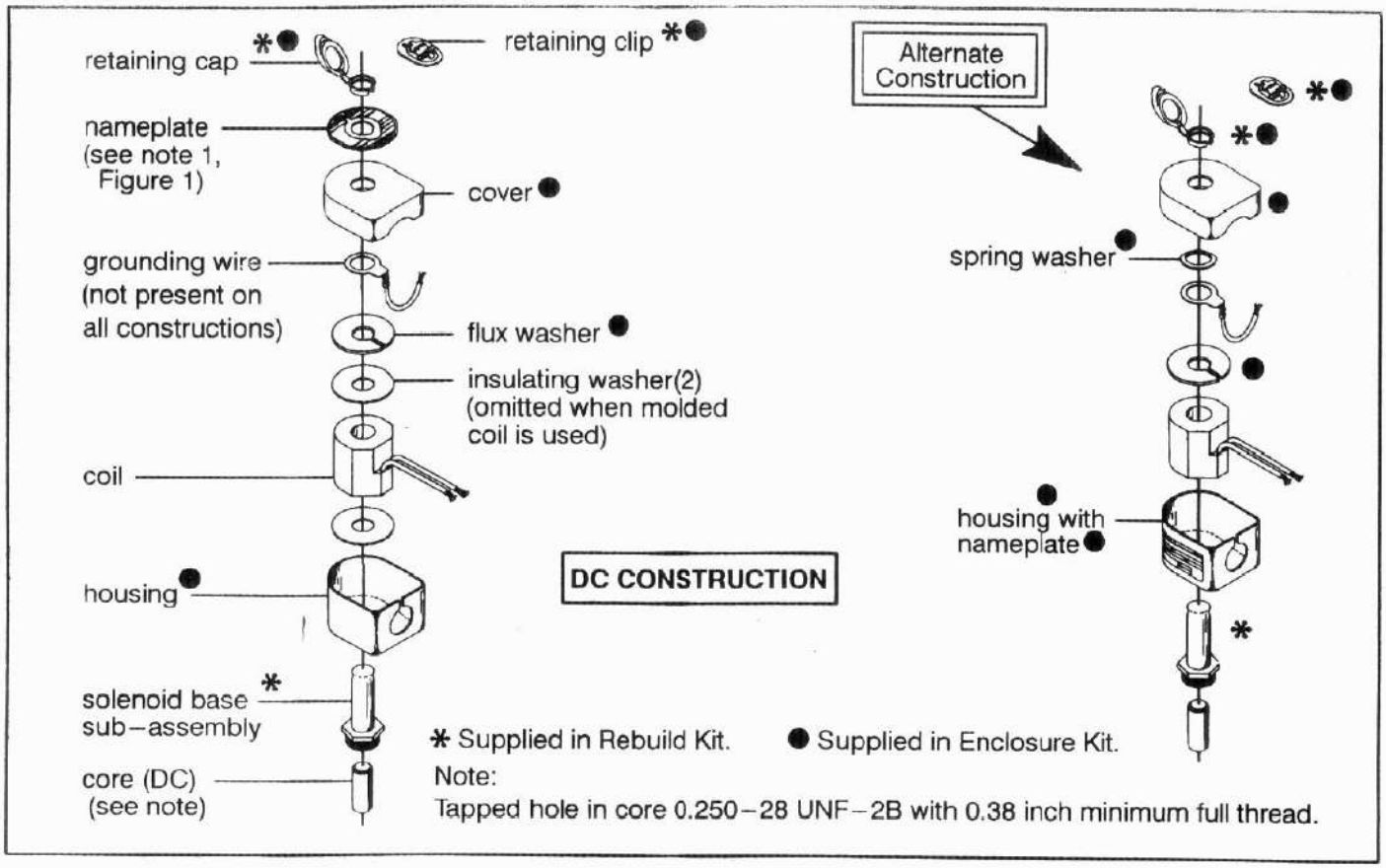

Figure 2. Catalog Nos. 80171 and 80172 General Purpose Solenoid Enclosure, DC Construction.

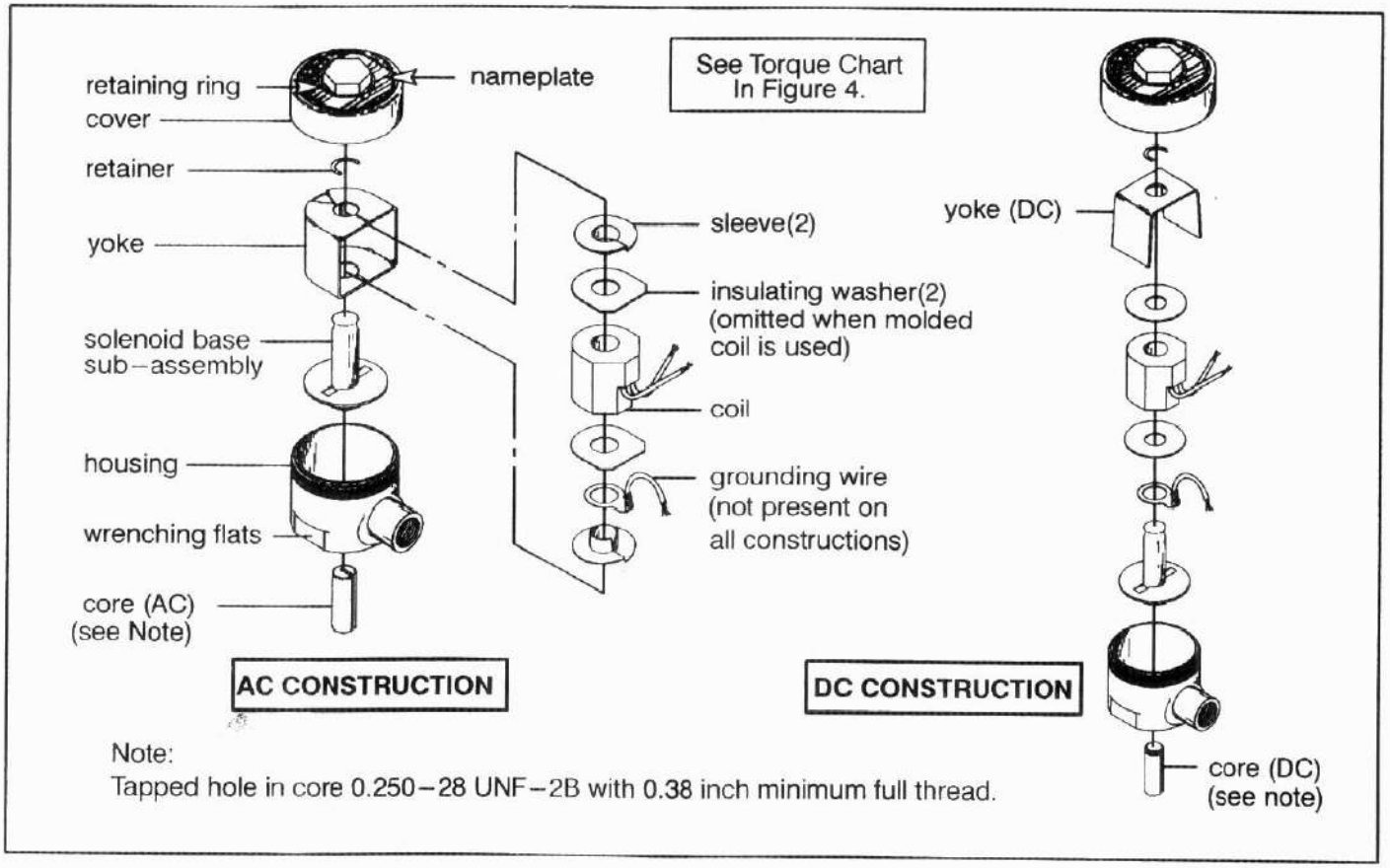

Figure 3. Catalog Nos. EF80171, EF 80172, 80173 and 80174 Raintight/Explosionproof Solenoid Enclosure.

Notes:

1. These Catalog Nos. meet watertight requirements only when cover gasket and solenoid bonnet gasket are used.
2. A solenoid base sub–assembly with a solenoid bonnet gasket are supplied in the Rebuild Kit. These two parts are a direct replacement for the existing solenoid base sub–assembly.
   The cover gasket is also supplied in Rebuild Kit, but may be omitted if cover does not use a gasket.
3. Install all parts supplied in Enclosure Kit except omit the solenoid bonnet gasket if the existing solenoid base sub–assembly does not use a gasket.
4. Tapped hole in core 0.250–28 UNF–2B with 0.38 inch minimum full thread.
5. Special wrench adapter for solenoid base sub–assembly is supplied in Rebuild Kit and Enclosure Kit.

Torque Chart		
Part Name	Inch–Pounds	Newton–Meters
cover	135 ± 15	15,3 ± 1,7
solenoid base sub–assembly ▲	175 ± 25	19,8 ± 2,8

▲ To order special wrench adapter for solenoid base sub–assembly, specify Kit No. K218950

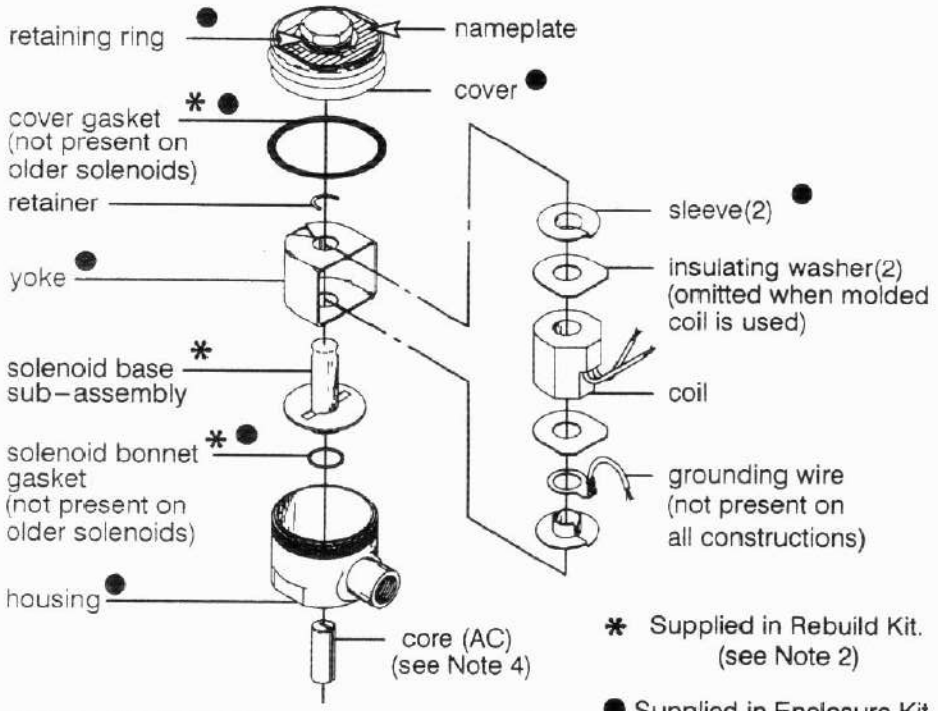

AC CONSTRUCTION

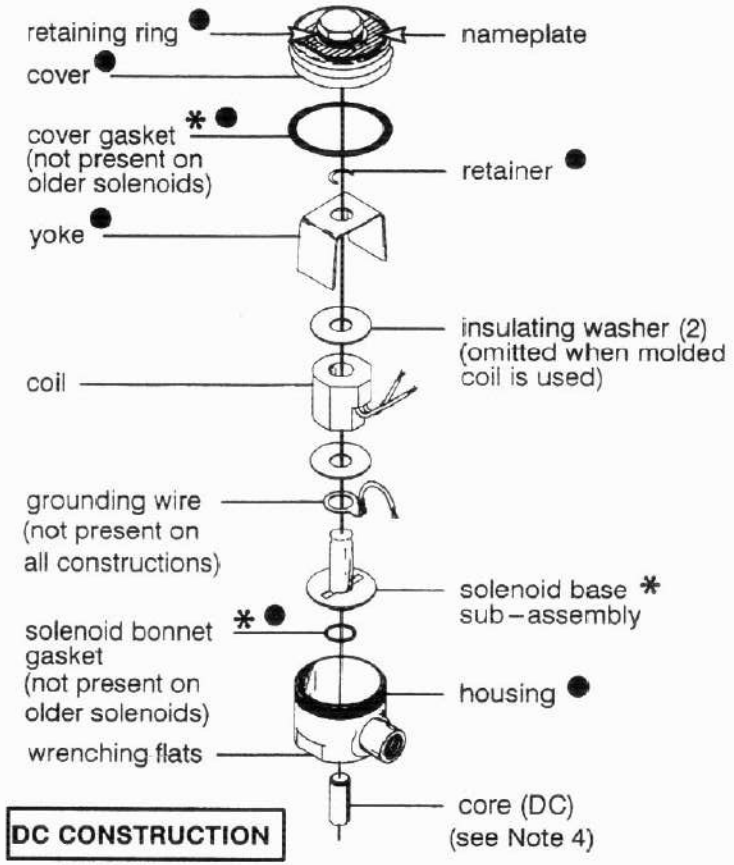

DC CONSTRUCTION

Figure 4. Catalog Nos. EF80171, EF80172, 80173, and 80174 Raintight/Watertight/Explosionproof Solenoid Enclosure.

WARNING: Installation and use of this product must be in compliance with all Engineered Controls International, Inc. instructions as well as requirements and provisions of NFPA #54, NFPA #58, DOT, ANSI, all applicable federal, state, provincial and local standards, codes, regulations and laws.

Inspect regularly. Replace as required. The safe useful life of a regulator is less than 15 years in most applications.

Installation and inspections should be performed only by qualified personnel.

Be sure all instructions are read and understood before installation, operation and maintenance. These instructions must be passed along to the end user of the products.

CAUTION: Contact or inhalation of liquid propane, ammonia and their vapors can cause serious injury or death! NH_3 and LP-Gas must be released outdoors in air currents that will insure dispersion to prevent exposure to people and livestock. LP-Gas must be kept far enough from any open flame or other source of ignition to prevent fire or explosion! LP-Gas is heavier than air and will not disperse or evaporate rapidly if released in still air.

NOTE: All ECII® products are mechanical devices that will eventually become inoperative due to wear, contaminants, corrosion and aging of components made of materials such as metal and rubber. As a general recommendation, regulators should be replaced in 15 years or less.

The environment and conditions of use will determine the safe service life of these products. Periodic inspection and maintenance are essential.

Because ECII® products have a long and proven record of quality and service, LP-Gas dealers may forget the hazards that can occur because a regulator is used beyond its safe service life. The life of a regulator is determined by the environment in which it "lives". The LP-Gas dealer knows better than anyone what this environment is.

There is a developing trend in state legislation and in proposed national legislation to make the owners of products responsible for replacing products before they reach the end of their safe useful life. LP-Gas dealers should be aware of legislation which could affect them.

FOREWORD:

The 1580 Series Regulators are designed to reduce LP-Gas pressure to between 3 and 125 PSIG. They are accurate and dependable over a wide range of operating conditions, and come in a variety of sizes, capacities and designs to suit your needs. Precision built with multi-million BTU capacity, 1580 Series Regulators are perfect for big, tough jobs such as crop drying, asphalt batch mixing, road building (tar wagons), heat treating, high volume space heating and other large industrial and commercial loads. Ideal as a first stage regulator, the large nozzle and straight-through flow provide high capacities and maximum resistance to freeze-ups. The AA1580 series is ideal for use in anhydrous ammonia applications such as blue print machines and heat treating.

Installation:

Clean dirt and foreign material from all piping and fittings. Be sure the regulator inlet and outlet are correctly installed in-line according to the designed flow pattern. The regulator can only be used indoors in accordance with NFPA #58. The regulator must be positioned to protect the vent from the elements of ice, snow drifts, rain, dirt, bugs, paint, or other foreign material. The 1580 Series Regulators are designed for use in both vapor and liquid service, but caution must be exercised with liquid service where the application involves trapping liquid between the regulator and a shut-off valve, either upstream or downstream of the regulator. Any hose or piping that may hold trapped liquid should be protected by installing an ECII® 3127 Series Hydrostatic Relief Valve, or the equivalent.

1580 & AA1580 Series Adjustable High Pressure Regulators

Installation and Adjustment

Adjustment:

The 1580 Series Regulator delivers any pressure within the range of the spring size selected. Please follow the "recommended" ranges shown in the chart. Adjustments are made by loosening the locknut securing the adjusting screw in the bonnet. Turning the adjusting screw down (clockwise) increases the delivery pressure. Turning the adjusting screw up (counterclockwise) decreases the delivery pressure.

Regulator Series	Part Number Suffix	Delivery Pressure Range, PSIG	
		Recommended	Actual
1580	H	45 - 125	0 - 125
	L	25 - 50	0 - 50
	N	3 - 30	0 - 30
AA1580	H	45 - 125	0 - 125
	L	20 - 50	0 - 50
	K, W	3 - 25	0 - 30

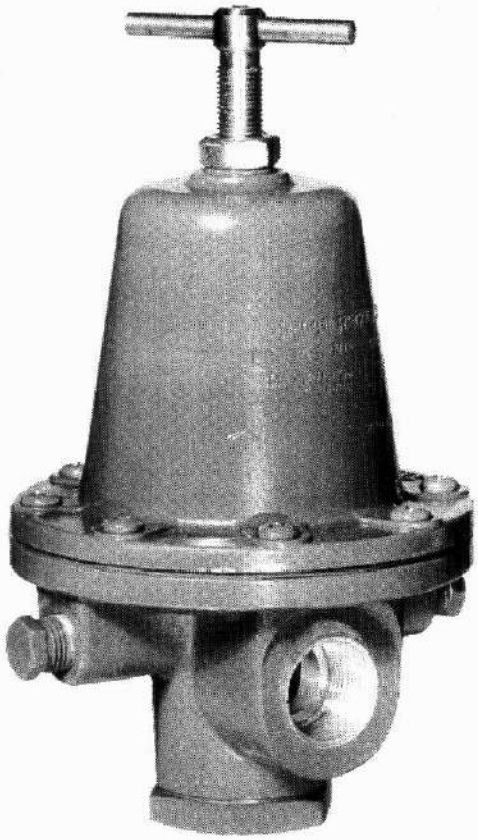

1580 Series

NOTICE

LP-Gas is extremely flammable and explosive. Failure to install parts exactly as described in the instructions could result in a product that will not perform satisfactorily. Even if parts are correctly installed, the product might fail to perform satisfactorily if other parts are worn, corroded or dirty. Improper repair can cause leaks and malfunction, which could result in bodily injury and property damage. **Any such use or installation of parts must ONLY be done by experienced and trained personnel using accepted governmental and industrial safety procedures.**

Most Engineered Controls International, Inc. products are listed with Underwriters Laboratories as manufactured. If repaired, the continued validity of the UL listing is contingent upon proper inspection to determine what needs repairing, proper repair using Engineered Controls International, Inc. parts and procedures, and proper testing for leakage and performance following repairs and installation.

Engineered Controls International, Inc. assumes no responsibility or liability for performance of products repaired in the field. It must be clearly understood that the person or organization repairing the product assumes total responsibility for performance of the product.

LIMITED WARRANTY AND LIMITATION OF LIABILITY

Limited Warranty

Engineered Controls International, Inc. warrants products and repair kits manufactured by it to be free from defects in materials and workmanship under normal use and service for a period of 12 months from the date of installation or operation or 18 months from the date of shipment from the factory, whichever is earlier. If within thirty days after buyer's discovery of what buyer believes is a defect, buyer notifies Engineered Controls International, Inc. thereof in writing, Engineered Controls International, Inc., at its option, and within forty-five days, will repair, replace F.O.B. point of manufacture, or refund the purchase price of that part or product found by it to be defective. Failure of buyer to give such written notice within thirty days shall be deemed an absolute and unconditional waiver of any and all claims of buyer arising out of such defect..

This warranty does not extend to any product or part that is not installed and used in accordance with Engineered Controls International, Inc.'s printed instructions, all applicable state and local regulations, and all applicable national standards, such as those promulgated by NFPA, DOT and ANSI. This warranty does not extend to any product or part that has been damaged by accident, misuse, abuse or neglect, nor does it extend to any product or part which has been modified, altered, or repaired in the field.

Except as expressly set forth above, and subject to the limitation of liability below, Engineered Controls International, Inc. makes NO OTHER WARRANTY, EXPRESS OR IMPLIED, INCLUDING, BUT NOT LIMITED TO THE IMPLIED WARRANTIES OF MERCHANTABILITY AND FITNESS FOR A PARTICULAR PURPOSE, with respect to its products and parts, whether used alone or in combination with others. Engineered Controls International, Inc. disclaims all warranties not stated herein.

Limitation of Liability

Engineered Controls International, Inc.'s total liability for any and all losses and damages arising out of any cause whatsoever shall in no event exceed the purchase price of the products or parts in respect of which such cause arises, whether such cause be based on theories of contract, negligence, strict liability, tort or otherwise.

Engineered Controls International, Inc. shall not be liable for incidental, consequential o. punitive damages or other losses. Engineered Controls International, Inc. shall not be liable for, and buyer assumes liability for, all personal injury and property damage connected with the handling, transportation, possession, further manufacture, other use or resale of products, whether used alone or in combination with any other products or material.

If Engineered Controls International, Inc. furnishes technical advice to buyer, whether or not at buyer's request, with respect to application, further manufacture or other use of the products and parts, Engineered Controls International, Inc. shall not be liable for such technical advice and buyer assumes all risks of such advice and the results thereof.

NOTE: Some states do not allow the exclusion or limitation of incidental or consequential damages, so the above limitation or exclusion may not apply to you. This warranty gives you specific legal rights, and you may have other rights that vary from State to State. The portions of this limited warranty and limitation of liability shall be considered severable and all portions which are not disallowed by applicable law shall remain in full force and effect.

WARNING

All Engineered Controls International, Inc. products are mechanical devices that will eventually become inoperative due to wear, corrosion and aging of components made of materials such as rubber, etc. The environment and conditions of use will determine the safe service life of these products. Periodic inspection and maintenance are essential to avoid serious injury and property damage.

Many Engineered Controls International, Inc. products are manufactured components which are incorporated by others on or in other products or systems used for storage, transport, transfer and otherwise for use of toxic, flammable and dangerous liquids and gases. Such substances must be handled by experienced and trained personnel only, using accepted governmental and industrial safety procedures.

NOTICE TO USERS OF PRODUCTS

The Limited Warranty stated above is a factory warranty to the first purchasers of Engineered Controls International, Inc. products. Since most users have purchased these products from Engineered Controls International, Inc. distributors, the user must within thirty (30) days after the user's discovery of what user believes is a defect, notify in writing the distributor from whom he purchased the product/parts. The distributor may or may not at the distributor's option, choose to submit the product/parts to Engineered Controls International, Inc., pursuant to its Limited Warranty. Failure by buyer to give such written notice within thirty (30) days shall be deemed an absolute and unconditional waiver of buyer's claim for such defects. Acceptance of any alleged defective product/parts by Engineered Controls International, Inc.'s distributor for replacement or repair: under the terms of Engineered Controls International, Inc.'s Limited Warranty in no way obligates Engineered Controls International, Inc. to the terms of the above warranty.

Because of a policy of continuous product improvement, Engineered Controls International, Inc. reserves the right to change designs, materials or specifications without notice.

ECII Engineered Controls International, Inc.

100 RegO Drive PO Box 247 Elon College, NC 27244 USA Phone (919) 449-7707 Fax (919) 449-6594 Telex 253204

Printed in the USA 02-0692-0491
Instruction Sheet 1580-300

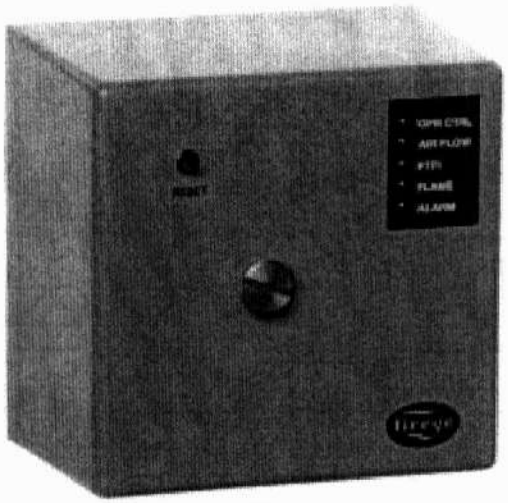

FIREYE MODULAR M-SERIES II

FLAME SAFEGUARD CONTROLS

UL LISTED FM APPROVED CSA

Year 2000 Compliant in accordance with BSI document DISC PD2000-I

WARNING: Selection of this control for a particular application should be made by a competent professional, licensed by a state or other government agency. Inappropriate application of this product could result in an unsafe condition hazardous to life and property.

DESCRIPTION

Fireye® Modular M-Series II Flame Safeguard Controls are compact, modular burner management systems. They are designed to provide automatic ignition and continuous flame monitoring for commercial sizes of heating and process burners that use gas and/or light oil fuels.

Flame monitoring is accomplished by miniature UV scanners or Flame Rod/Photocell detectors and plug-in amplifier and programmer modules which connect into a standard chassis and wiring base. Interchangeable programmer and amplifier modules allow for complete versatility in selection of control function, timing, and flame scanning means. Functions such as relight, two stage capability, non-recycle air flow, purge timing, and pilot cutoff are determined by the programmer module. Type of flame scanner (UV, Flame Rod, or Photocell) and Flame Failure Response Time (F.F.R.T.) are determined by the amplifier module.

Some programmer modules are equipped with a series of dipswitches to select Purge Timing, Pilot Trial For Ignition (P.T.F.I.) timing, and Recycle or Non-Recycle operation. LED indicator lights on all programmer modules indicate the operating status of the control.

In the event of ignition failure, or following a safety shutdown, the unit locks out, activating an alarm circuit. Manual reset is required. Remote reset (via remote pushbutton or power interruption) is available on the MC120R, MC120P and MC230R chassis. A detailed description of the various programmer modules is found later in this document. Test jacks are provided to permit flame signal measurement during operation. A "run-check" switch is provided on the MP560, MP561 and MP562 programmer modules to assist in testing size, position, and stabilization of the pilot.

Modular M-Series II controls incorporate a safety checking circuit that is operative on each start. If flame (real or simulated) is detected prior to a start or during the purge, the fuel valves will not be energized, and the unit will lock out.

The Modular M-Series II controls use the same wiring base as the Fireye UVM and TFM Controls and are designed to be interchangeable with most models without rewiring. See INSTALLATION OF CONTROL, SCANNERS, AND FLAME DETECTORS (page 5) for temperature and wiring requirements.

NOTE: Using MC120P chassis to upgrade UVM and TFM controls requires re-wiring the air flow switch.

SPECIFICATIONS

Supply:
120V (min. 102, max. 132) 50/60 Hz. (MC120/MC120R/MC120P)
230V (min. 196, max 253) 50/60Hz (MC230/MC230R)

Table 1: **AMBIENT TEMPERATURE LIMITS**

	MAXIMUM		MINIMUM	
Control	125°F	(52°C)	- 40°F	(- 40°C)
Scanner UV1A, UV2, UV8A, 45UV3	200°F	(93°C)	- 40°F	(- 40°C)
Photocell 45CM1	165°F	(74°C)	- 40°F	(- 40°C)
Flame Rod (Tip 2460 F)	1500°F	(816°C)	- 40°F	(- 40°C)

Power Consumption: 12 VA (Operating)

Shipping Weight (Approx.): 3 lbs. (1.4kg)

Table 2: **LOAD RATINGS**

Fireye Terminal	Typical Load	Maximum Rating & 120V 60 Hz
3 or 4 Individual or combined	Pilot valve(s) Solenoid valve Ignition Transformer	125 VA pilot duty (solenoid valve) plus 250 VA (Transformer)
5	Main Fuel Valve(s)	125 VA pilot duty (solenoid) or 25 VA pilot duty (solenoid) and 400 VA (opening) motorized
8	Motor or contactor	Motor normally energized and de-energized by the operating control whose rating must be suitable. Terminal 8 rated to de-energize 9.8 FLA, 58.8 LRA, on safety lockout.
A	Alarm	50 VA, pilot duty
Minimum load requirement = 100mA		

APPROVALS

Underwriters Laboratories Inc.
Listed Guide MCCZ - File MP 1537

Factory Mutual System (FM) Approved

Underwriters Laboratories Inc.
Recognized Components Guide MCCZ2
File MP1537

Canadian Standards Association
Guide 300-1-0.2 Class 2642 Oil File LR7989
Guide 140-A-2 Class 2632 Gas File LR7989

American Gas Association (for the following models only):

MC120	MAUV1	MP100, MP230 (Fixed), MP230H (Fixed), MP560 (Fixed) Programmer modules where purge time, PTFI and recycle or non-recycle operation is specified. See *Ordering Information— Programmer Modules.*
	MAUV1T	
	MART1	
	MART1T	

ANS Z21.20 Automatic Ignition Systems.

Approvals do not apply to MC230 and MC230R Chassis and associated programmers.

Year 2000 Compliant in accordance with BSI document DISC PD2000-I:1998.

OUTLINE DIMENSIONS

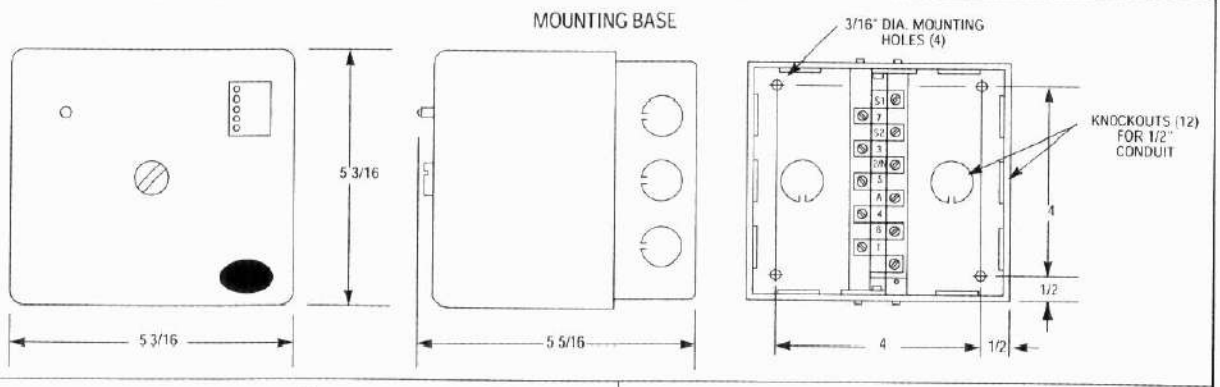

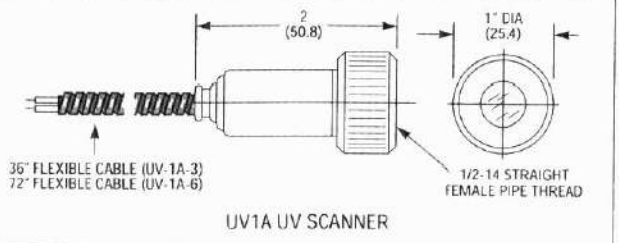

UV1A UV SCANNER

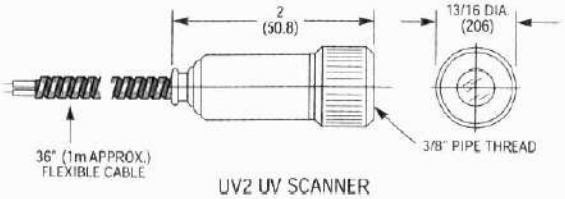

UV2 UV SCANNER

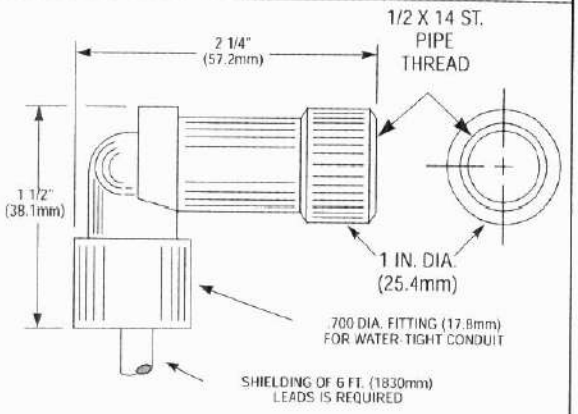

UV8A SCANNER

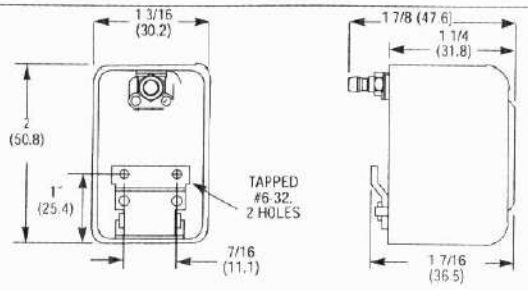

TYPE 45CM1 PHOTOCELL SCANNER

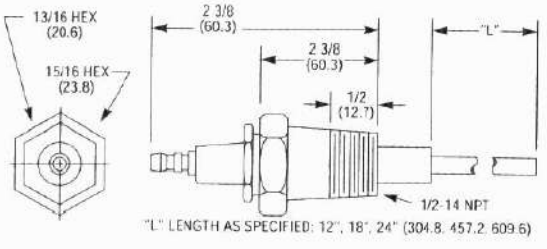

69ND1 FLAME ROD

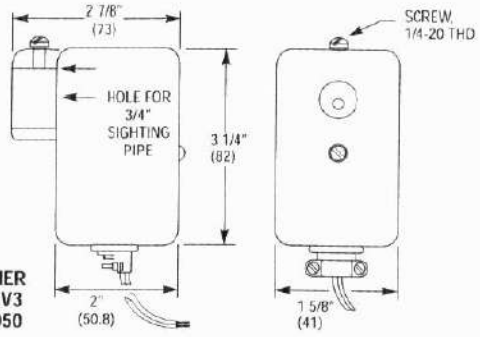

UV SCANNER
Type: 45UV3
Model: 1050

ORDERING INFORMATION

CHASSIS (COMMON FOR ALL CONTROLS, INCLUDES DUST COVER):

MC120	120 VAC Supply, 50 Hz/60 Hz
MC120R	120 VAC Supply, 50 Hz/60 Hz. Remote reset capability.
MC120P	120 VAC Supply, 50 Hz/60 Hz. Remote reset and post purge capability.
MC230	230 VAC Supply, 50 Hz/60 Hz
MC230R	230 VAC Supply, 50 Hz/60Hz. Remote reset capability.

PROGRAMMER MODULES:

MP100, MP100E	Relight operation.
MP101	Relight operation. Programmer will not lockout on flame signal during "off cycle."
MP102, MP102E	Non-recycle on flame fail, 5 second PTFI.
MP230	Selectable purge timing, trial for ignition timing, and recycle/non-recycle operation.
MP230H	Selectable purge timing, trial for ignition timing, pilot stabilizing period, and recycle/non-recycle operation. For use with two stage burners.
MP560	Selectable purge timing, pilot trial for ignition timing, pilot stabilizing period, and recycle/non-recycle operation. 10 second main flame trial for ignition, run-check switch.
MP561	MP560 programmer without pilot stabilization period.
MP562	MP560 programmer with lockout on loss of air flow. Non-recycle operation only.

NOTE: Programmers with the suffix "E" (e.g. MP100E) are for use with the MC230 and MC230R chassis only.

AMPLIFIER MODULES:USE WITH SCANNERS:

MAUV1	UV amplifier, 2-4 second F.F.R.T.	UV1A, UV2, UV8A, 45UV3-1050
MAUV1T	UV amplifier,.8 second F.F.R.T.	UV1A, UV2, UV8A, 45UV3-1050
MART1	Flame rectification amplifier, 2-4 second F.F.R.T.	45CM1, 69ND1
MART1T	Flame rectification amplifier, .8 second F.F.R.T.	45CM1, 69ND1

UV SCANNERS:

UV1A3	1/2" NPT connector, 3' flex. cable
UV1A6	1/2" NPT connector, 6' flex. cable
UV2	3/8" NPT connector, 3' flex. cable
UV8A	1/2" NPT 90 degree angle head, 6' flex. cable
45UV3-1050	3/4" sleeve/setscrew mount

FLAME DETECTORS:

45CM1-1000	Photocell with filter
45CM1-1000Y	Photocell without filter
69ND1-1000K4	12 inch flame rod, 1/2" NPT connector
69ND1-1000K6	18 inch flame rod, 1/2" NPT connector
69ND1-1000K8	24 inch flame rod, 1/2" NPT connector

WIRING BASE (COMMON FOR ALL CONTROLS):

61-3060	Closed wiring base, surface mounting
61-5042	Open wiring base, cabinet mounting

For a complete system, choose one of each of the following:

- — Chassis
- — Programmer Module
- — Amplifier Module
- — UV Scanner or Flame Detector
- — Wiring Base

WARNING: Installer must be trained and qualified. Follow the burner manufacturer's instructions, if supplied. Otherwise, proceed as follows:

INSTALLATION OF CONTROL, SCANNERS, AND FLAME DETECTORS

Wiring Base

Mount the wiring base on the burner or on a panel. The location should be free from excessive vibration and within the specified ambient temperature rating. The base may be mounted in any angular position.

All wiring should comply with applicable electrical codes, regulations, and local ordinances. Use moisture resistant wire suitable for at least 90 degrees C. Circuit recommendations are found on pages 26 through 30. Consult the factory for assistance with non-standard applications.

WARNING: Controls require safety limits utilizing isolated mechanical contacts. Solid state limit switches are not acceptable and should not be used due to their high leakage currents.

Installing the Programmer and Amplifier Modules

WARNING: Remove power from the control before proceeding.

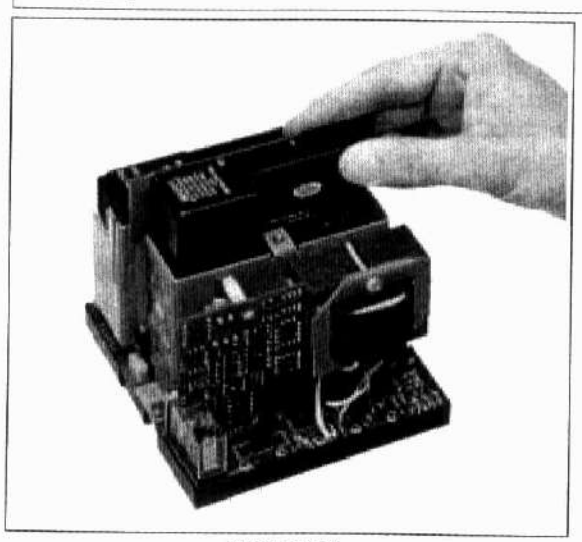

AMPLIFIER

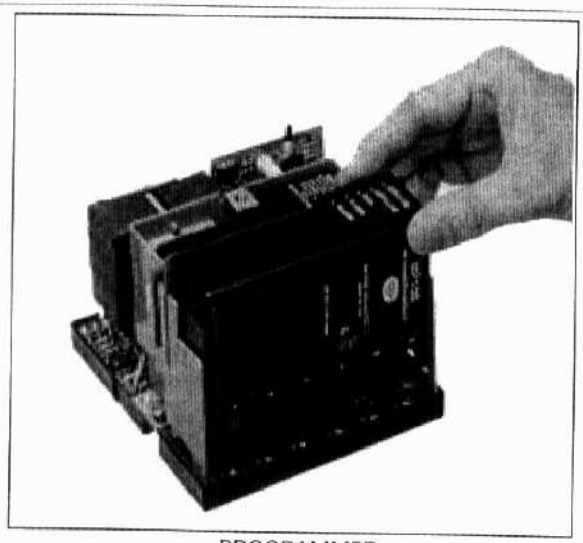

PROGRAMMER

Select the appropriate programmer and amplifier modules for your application. Remove the dust cover from the chassis. Insert the amplifier module into the slot in the center of the chassis and gently push the module into position. Insert the programmer module into the slot at the right side of the chassis and gently push the module into position.

NOTE: *Refer to Programmer dipswitch settings on page 12 for the proper setting of the dipswitches for those programmers with this feature.*

WARNING: Turn off the power when installing or removing the control.

Replaceable Fuse

The programmer modules are designed with a field replaceable fuse. The fuse is located on the printed circuit board below the cover. The fuse will blow as a result of an overload condition on Terminals 3, 4 or 5. To replace the fuse, remove power from the system. Remove the programmer module and using a small screwdriver or similar tool , remove the fuse from its holder. Install a Fireye replacement fuse (P/N 23-176) or equivalent 8 amp fuse (e.g. Littlefuse 12AG, 8 amp, 125V). FOR MP100E OR MP102E, ORDER FIREYE REPLACEMENT FUSE (P/N 23-183 OR EQUIVALENT 3.5 AMP FUSE (E.G. LITTLEFUSE 2203.5, 3.5 AMP, 250V).

WARNING: Remove power from the control before proceeding.

INSTALLATION - UV SCANNERS

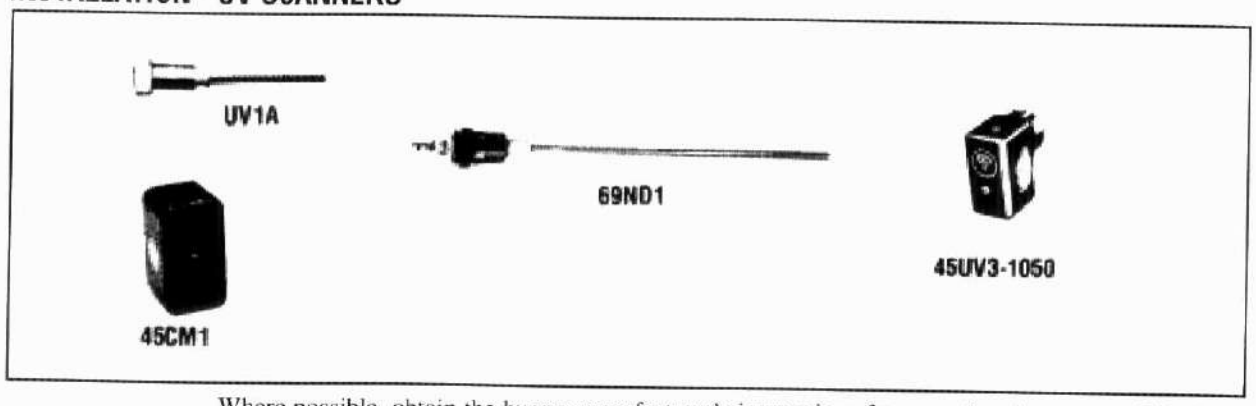

Where possible, obtain the burner manufacturer's instructions for mounting the scanner. This information is available for most standard burners. The scanner mounting should comply with the following general instructions:

1. Locate the scanner within 30 inches of the flame to be monitored, closer if possible.
2. Select a scanner location that will remain within the ambient temperature limits of the UV-eye scanner (200°F/93°C). If cooling is required, use (a) an insulating coupling (Fireye P/N 35-69) to reduce conducted heat; (b) a window coupling (Fireye P/N 60-1257) to seal off furnace or burner pressure; (c) cooling air to reduce the scanner sight pipe temperature.
3. Mount rigidly a short length (4″ to 8″) of $^{1}/_{2}$″ or $^{3}/_{4}$″ black iron pipe in a position that permits an unobstructed view of the pilot and/or main flame.

CAUTION: The scanner must not sight the ignition spark directly, or any part of the burner that can reflect the spark back to the scanner.

4. The maximum UV signal from a flame is found in the first one-third of the visible flame taken from the point where the flame begins. The scanner sight pipe should be aimed at this area.
5. A correct scanner application will not see a pilot flame that is too small to ignite the main flame reliably. Note particularly the test for minimum pilot that is described on page 22.
6. On installations having negative pressure combustion chambers, a small hole ($^{1}/_{8}$″ or $^{3}/_{16}$″) drilled in the sight pipe will assist in keeping the pipe clean and free from smoke.
7. Two scanners may be installed on one burner if it is necessary to view two areas to obtain reliable detection of the flame. They should be wired in parallel.
8. The UV-eye scanner is designed to seal off the sight pipe up to pressures of 1 PSI when the scanner lock nut is firmly tightened. Pressures in excess of 1 PSI should be blocked from the scanner. A quartz lens coupling (P/N 60-1290) or quartz window coupling (P/N 60-1257) may be used. Each is rated from -3 to +100 PSI max.
9. To increase scanner sensitivity, a quartz lens coupling (P/N 60-1290) may be used. The quartz lens permits location of the UV-eye twice the distance noted in Item 1. Use $^{1}/_{2}$″ x 1 $^{1}/_{2}$″ nipple between UV1A scanner and union. Use $^{3}/_{8}$″ close nipple and $^{1}/_{2}$″ by $^{3}/_{8}$″ bushing on UV-2 applications.

General Requirements

1. As close as possible — 30" or closer.
2. As cool as possible — Not over 200°F (93°C).
3. Avoid sighting the spark — Resight scanner, shield between spark and scanner, or orifice to reduce reflected signal from spark.
4. Must see pilot and/or main flame — Scanner view must be unobstructed.
5. Minimum pilot test — See page 22.

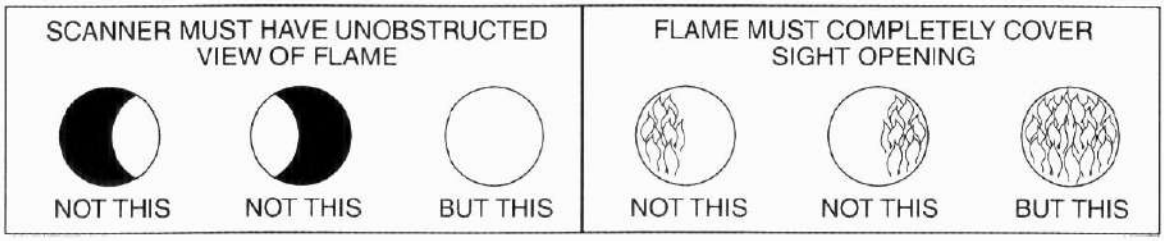

Typical Scanner Installations

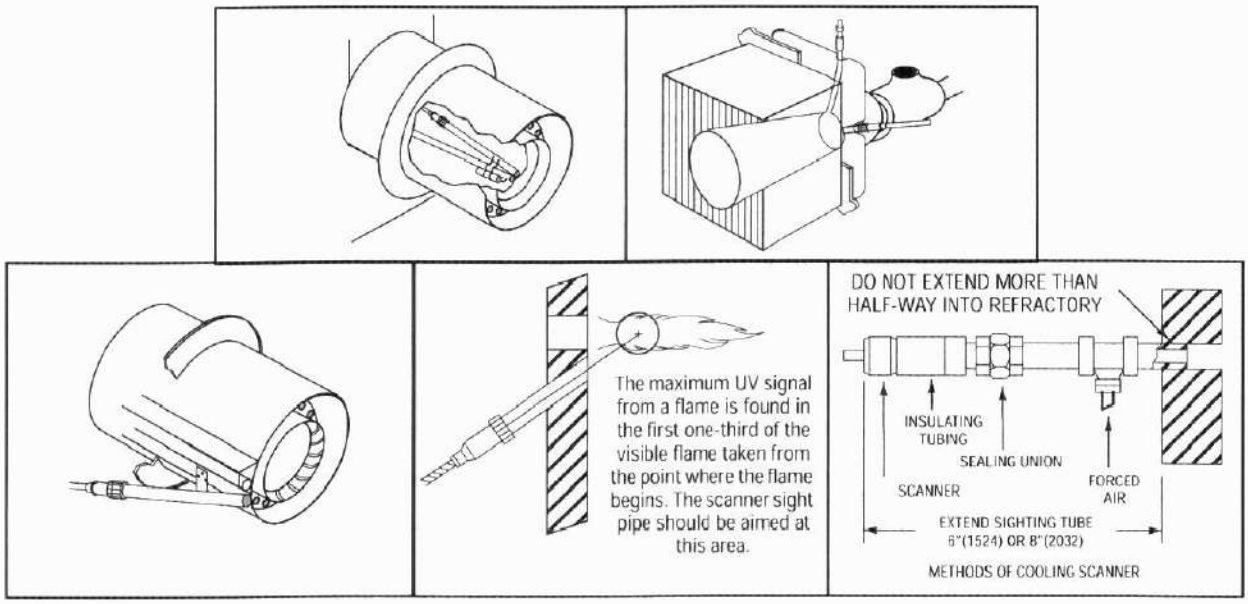

Wiring of UV Scanners

The UV1A scanner is supplied with 36" or 72" of flexible cable. The UV-2 scanner is supplied with 36" of flexible cable. If it is necessary to extend the scanner leads, the following instructions apply:

1. Scanners without armored cable must be wired using metal cable or rigid conduit.
2. High voltage wiring must not be installed in the same conduit with flame detector wiring.
3. **Selection of Scanner Wire:**
   a. Use #14, 16, or 18 gauge wire with 90°C, 600 volt insulation for up to 200 feet of distance. (approx. 20% signal loss at 100 feet, 40% signal loss at 200 feet).
   b. Asbestos insulated wire should not be used.
   c. Multi-conductor cable is not recommended without prior factory approval.
   d. High voltage ignition wiring *should not* be installed in the same conduit with flame detector wires.

4. **Installation of Extended Scanner Wiring:**
   — For extended scanner wiring up to 500 feet, and for shorter lengths to reduce signal loss, use a shielded wire (Belden 8254-RG62 coaxial cable, or equal) **for each scanner wire** of UV1, UV2. The ends of the shielding must be taped and not grounded.
5. **Multiple Scanner Installations:**
   — The wiring from multiple UV scanners may be installed in a common metallic conduit.
   — Multi-conductor cable is not recommended without prior factory approval.

INSTALLATION - 45CM1 PHOTOCELL MOUNT

The 45CM1 photocell mount with #922 photocell and Rajah stud terminal, is designed for use in the blast tube on conventional atomizing oil burners. Two typical applications are shown below.

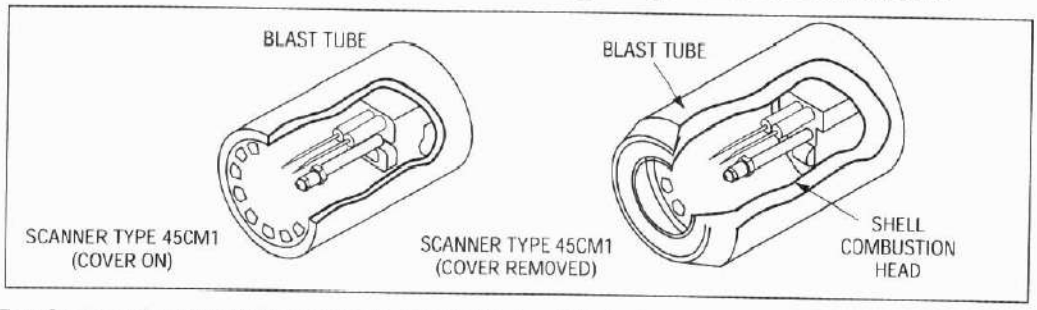

Test for Incandescent Refractory Hold-In with Photocell Detector

Type 45CM1 Photocell Scanners are actuated by light energy. To assure that the flame failure response time is not extended by radiation from incandescent refractory, the following test is recommended.

1. Operate the burner, following the burner manufacturer's instructions, until the refractory is at maximum operating temperature.
2. Turn off the main fuel supply manually.
3. Observe the display flame signal which must drop below 2 VDC within the flame failure response time (.8 seconds for MAUV1T, MART1T; 4 seconds for MAUV1, MART1).
4. If the flame failure response time exceed 4 seconds, reduce the amount of light at the Photocell with a screen, an orifice, or a filter lens, until the normal flame failure response is obtained.

INSTALLATION - 69ND1 FLAME ROD

The 69ND1 flame rod proves a gas pilot flame and/or main gas flame. It is a *spark plug* type unit consisting of $^1/_2$" NPT mount, a KANTHAL flame rod, a glazed porcelain insulating rod holder and a spark plug connector for making electrical connections. The 69ND1 is available in 12," 18" or 24" lengths.

The flame rod may be located to monitor only the gas pilot flame or both the gas pilot and main gas flames. It is mounted on a $^1/_2$" NPT coupling.

The following instructions should be observed:

1. Keep flame rod as short as possible.
2. Keep flame rod at least $^1/_2$" from any refractory.
3. Flame rod should enter the pilot flame from the side so as to safely prove an adequate pilot flame under all draft conditions.
4. If the flame is nonluminous (air and gas mixed before burning), the electrode tip should extend at least $^1/_2$" into the flame, but not more than halfway through

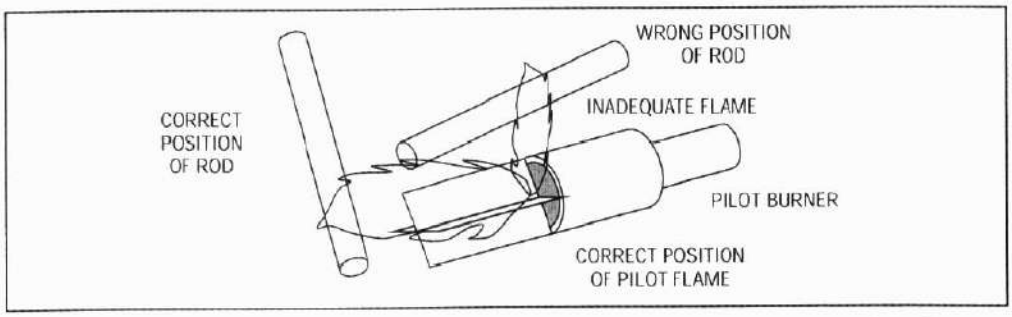

5. If the flame is partly luminous, the electrode tip should extend only to the edge of the flame. It is not necessary to maintain absolutely uninterrupted contact with the flame.
6. It is preferable to angle the rod downward to minimize the effect of sagging and to prevent it from coming in contact with any object.
7. An adequate grounding surface for the flame must be provided. The grounding surface in actual contact with the flame must be at least four times greater than the area of the portion of the flame rod in contact with the flame. It is essential to adjust the flame rod and ground area ratio to provide a minimum signal reading of 6.0 VDC.

***Note:** Interference from the ignition spark can alter the true signal reading by adding to, or subtracting from it. This trend sometimes may be reversed by interchanging the primary wires (line voltage) to the ignition transformer. This interference can also be reduced by the addition of grounded shielding between the flame rod and ignition spark.*

8. Proven types of flame grounding adapters, as shown below, may be used to provide adequate grounding surface. High temperature stainless steel should be used to minimize the effect of metal oxidation. This assembly may be welded directly over the pilot or main burner nozzle

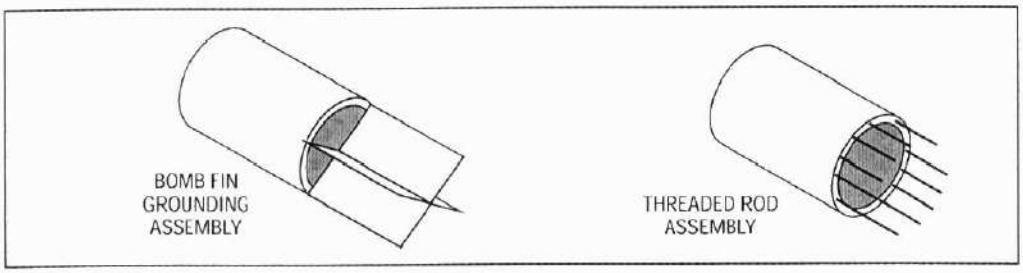

WIRING OF PHOTOCELLS AND FLAME RODS

For proper operation of flame rectification systems (photocells and flame rods), it is necessary to maintain at least 20 megohms insulating resistance in the flame rectification circuit.

1. The scanner should be wired using metal cable or rigid conduit.
2. High voltage wiring must not be installed in the same conduit with scanner wiring.

Selection of Scanner Wire

1. Use #14, 16, or 18 gauge wire with 90 C, 600 volt insulation for up to 20 feet distance.
2. The type of insulation used with flame rectification is important, since it must protect against current leakage resistance to ground. Use Belden 8254-RG62 Coaxial Cable (or equal) for runs greater than 20 feet. **Maximum wiring run not to exceed 100 feet.**

MAINTENANCE

Type UV1, UV2, UV8A, and 45UV3 Ultraviolet and 45CM1 Photoelectric Scanners

The viewing area of the scanner must be kept clean. Even a small amount of contamination will reduce the flame signal reaching the detector by a measurable amount. Wipe the viewing area routinely using a soft cloth dampened with concentrated detergent.

Type 45CM1 Scanners include a replaceable #4-230 Phototube #922.

Type 69ND1 Flame Rod

The flame rod and its insulator should be kept clean by washing routinely with soap and water. Rods should be routinely replaced as they oxidize.

Flame Signal Strength

Routine observation of the flame signal strength will forewarn any deterioration in the capability of the flame detector or its application.

Periodic Safety Check

It is recommended that a procedure be established to test the complete flame safeguard system at least once a month. This test should verify the proper operation of all limit switches and safety interlocks as well as flame failure protection and fuel safety shutoff valve tightness.

Rotation

It is recommended that control and scanner units purchased as spares be installed periodically.

MC120P POST PURGE CHASSIS

The MC120P Chassis provides the following capabilities:

— A fifteen (15) second post purge at the end of an operating cycle or after a safety shutdown condition (prior to initiating a lockout).

— Remote reset in the event of a lockout condition.

Fifteen (15) second post purge — The blower motor (terminal 8) remains energized for at least 15 seconds at the end of every operating cycle (power removed from terminal 7). The blower motor also remains energized for 15 seconds following a condition which causes a safety shutdown (de-energizing terminals 3, 4, and 5). After the 15 second post purge is completed, the MC120P will initiate the safety lockout - energizing the alarm relay (lockout pushbutton) and terminal A.

Note: Refer to Figures 6, 7, 8 and 9 on pages 29 and 30 for wiring the MC120P chassis. The air flow switch is wired between terminals 7 and 6. On the MC120, MC120R, MC230, and MC230R, the air flow switch is wired between terminals 8 and 6.

Remote Reset - The MC120P chassis provides remote reset capability of a safety lockout. Refer to "Remote Reset Chassis (MC120R, MC230R, MC120P) for an explanation of the wiring and operation of the remote reset function.

REMOTE RESET CHASSIS (MC120R, MC120P, MC230R)

The MC120R/MC120P/MC230R Chassis provides remote reset capabilities in the event of a lockout condition. A blue slide switch located on the chassis (on the same PC board as the built-in reset switch) determines the method of reset. The MC120R and MC230R can be reset in any of the following ways:

1. Depress and release the reset button built into the MC120R/MC120P/MC230R chassis. This reset button will always reset the control, regardless of the position of the blue slide switch.
2. To reset the control via a remote pushbutton, move the blue slide switch towards the wiring base. Wire a momentary dry contact pushbutton into the two (2) terminals located on the MC120R/MC120P/MC230R chassis (on the same PC board as the built-in reset switch) and depress the

button for one (1) second. The maximum distance the remote reset switch can be wired from the control is 1,000 feet (max. wire size #14).

3. To reset the control via a power interruption, move the blue slide switch away from the wiring base (towards the dust cover). Interrupt the 120 VAC (MC120R/MC120P) or 230 VAC (MC230R) line power to the MC120R/MC120P chassis for one (1) second. The lockout will be reset when power is restored.
4. To reset via power interruption, remove 120 VAC (MC120R, MC120P) or 230VAC (MC230R) line power on the indicated terminals for 1 second for the following controls:

Terminal 1	MP560, MP561, MP562 when used with any amplifier. MP100, MP101, MP230, MP230H when used with MAUV1 or MAUV1T amplifier modules.
Terminal 7	MP100, MP101, MP230, MP230H when used with MART1 or MART1T amplifier modules.

CAUTION: Remote reset is recommended only on a control solely for proved ignition programming (pilot ignited burner) or a control for use only with appliances in which unburned fuel cannot accumulate and that is intended for installation in inaccessible locations such as open-flame, ceiling-suspended gas heaters.

PROGRAMMER DIPSWITCH SETTINGS

NOTE: THE DIPSWITCHES ARE A ONE TIME, ONE SHOT SETTING. ONCE THE DIPSWITCHES ARE SET **AND THE PLASTIC WINDOW IS MOVED OVER THE SWITCHES,** *THE WINDOW CANNOT BE MOVED AND THE DIPSWITCHES AND THEIR SETTINGS CANNOT BE CHANGED WITHOUT CAUSING THE CONTROL TO BECOME INOPERABLE.*

The MP230, MP230H, and the MP560, MP561, MP562 Programmer Modules have a series of 8 dipswitches which allow the user to program the purge timing, trial for ignition timing, and recycle/non-recycle operation of the control. These dipswitches are programmed only **ONCE**, before the initial operation of the control.

THE PLASTIC WINDOW MUST BE MOVED OVER THE SWITCHES IN ORDER FOR THE PROGRAMMER TO OPERATE BEYOND PURGE.

Purge Timing

Dipswitches # 1 through #5 are used to select the purge timing for the control. The available timing selections are 5 seconds, 7 seconds, 30 seconds, 60 seconds, 240 seconds, and any combination of those timings. The timings for these switches are **additive**. Selecting two or more purge timing switches will result in a purge timing period equal to the sum of the switches (e.g. selecting switches # 3, and #4 will cause a purge timing of 90 second: 30 seconds plus 60 seconds). To select the timing associated with a particular switch, move the switch to the RIGHT (On Position).

NOTE: *If all 5 switches are set to the OFF position, the control will lock out after the air flow switch has been proven closed.*

Trial for Ignition

Dipswitches #6 and #7 are used to select the trial for ignition timing for the control. The available timing selections are 5 seconds and 10 seconds only. See Figure #1. Select ONLY ONE of these two switches. These switches ARE NOT additive. To select the timing associated with a particular switch, move the switch to the RIGHT (On Position).

NOTE: *If both switches are set to the OFF position, the control will default to a trial for ignition period less than 5 seconds (e.g.: 3-4 seconds).*

If both switches are set to the **ON** position, the control will default to LOCKOUT.

Recycle/Non-recycle Operation

Dipswitch #8 is used to select either recycle or non-recycle operation of the control. (See APPLICATION AND FUNCTION). To select RECYCLE operation, move the switch to the LEFT. To select NON-RECYCLE operation, move the switch to the RIGHT.

SWITCH	OFF	ON	
1	-	5	PURGE TIMING *
2	-	7	
3	-	30	
4	-	60	
5	-	240	
6	-	5	PTFI
7	-	10	
8	RECYCLE	NON RECYCLE	
* The MP561 programmer module has purge timing selctions of 5, 7, 15, 30 and 60 seconds.			

Setting the Switches

Once the appropriate switches are set, slide the clear plastic window to the left so that it covers the switches and LOCKS into place. This action causes the control to become operable with the settings programmed from the dipswitches. The plastic window CANNOT be moved, and the dipswitches and their settings CANNOT be changed without causing the control to become inoperable. If the control does require alternative timings, the programmer module will have to be removed and replaced with another module with the appropriate dipswitch settings.

LED INDICATOR LIGHTS

The MP100, MP230, MP230H, and the MP560 Programmer Modules have 5 LED lights to indicate the operating status of the control. The function of these lights are:

Operating Control: This LED is energized whenever the burner control switch (Terminal #7) along with the various limit switches, operating controls and fuel interlocks are closed.

Air Flow: This LED is energized whenever power is detected between Terminals #8 and #6, indicating the air flow switch has closed.

PTFI: This LED is energized only during the Pilot Trial For Ignition Period.

Flame On: This LED is energized whenever a flame signal is detected by the UV scanner or Flame detector.

Alarm: this LED is energized whenever a safety lockout occurs. (See APPLICATION AND FUNCTION section).

APPLICATION AND FUNCTION - MP100, MP100E

The MP100 and MP100E Programmer Modules are designed as a replacement for the Fireye M1 Series "relight" controls. It provides ignition and Flame Safeguard for heating or process light oil or gas fired burners. The Amplifier Module should be selected based on the type of flame scanner (UV scanner, photocell, or flame rod), and the required Flame Failure response Time (F.F.R.T.). See ORDERING INFORMATION on page 4 for the appropriate part numbers.

Pilot Ignited Burners

The typical wiring arrangement illustrated on pages 26 (MC120, MC230) or 29 (MC120P) for pilot ignited burners provides the following function:

1. With power applied, and the limit-operating control circuit closed (**Operating Control** LED lit), the burner motor circuit is energized. The air flow switch circuit closes (**Air Flow** LED lit).
2. Following a short-time delay (4 to 6sec.), KL-1 closes, energizing Terminal 3 which powers the pilot gas valve, and Terminal 4 which powers the spark ignition. A 10 sec. trial for ignition is initiated (**PTFI** LED lit).
3. When pilot flame is detected (**Flame** LED lit), KF-1 closes, energizing Terminal 5 which powers the main fuel valve, and KF-2 opens, de-energizing Terminal 4 which shuts off the spark ignition.
4. When the operating control opens its circuit, or if a power failure occurs, the control is de-energized. Power interruptions in the millisecond range do not affect the operation of the control. Power interruptions of longer duration will cause the control to recycle.

NOTE: Controls with UV amplifiers (MAUV1 and MAUV1T) are always powered via Terminal #1.

5. In the event the pilot flame is not detected by the end of the trial for ignition period, the pilot gas valve and spark ignition are de-energized. A safety lockout occurs which de-energizes the burner motor and energizes the lockout alarm circuit (**Alarm** LED lit) approximately 30 seconds after the safety lockout occurs.
6. In the even of a flame failure during a firing period, the main fuel valve is de-energized and the spark ignition re-energized. A 10 sec. relight trial for ignition is initiated (**PTFI** LED lit). If flame is detected (**Flame** LED lit) during the trial for ignition period, the main fuel valve is re-energized and the spark ignition de-energized. If flame is not detected during the trial for ignition period, the pilot gas valve and spark ignition are de-energized. A safety lockout occurs which de-energizes the burner motor and energizes the lockout alarm circuit (**Alarm** LED lit) approximately 30 seconds after the safety lockout occurs.
7. **Manual reset is required following any safety lockout.**

NOTE: Wait 10 seconds after lockout before resetting the control.

Direct Spark Ignited Burners

The typical wiring arrangement illustrated on pages 26 (MC120, MC230 or 29 (MC120P) for direct spark ignited burners provides the following function:

1. With power applied, and the limit-operating control circuit closed (**Operating Control** LED lit), the burner motor circuit is energized. The air flow switch circuit closes (**Air Flow** LED lit).
2. Following a short-time delay (4-6 sec.) KL-1 closes, energizing Terminal 3 which powers the primary main fuel valve and Terminal 4 which powers the spark ignition. A ten sec. trial for ignition is initiated (**PTFI** LED lit).
3. When main flame is detected (**Flame** LED lit), KF-1 closes, energizing Terminal 5 which powers the secondary main fuel valve (if used), KF-2 opens de-energizing Terminal 4 which shuts off the spark ignition.
4. When the operating control opens or if a power failure occurs, the control is de-energized. Power interruptions in the millisecond range do not affect the operation of the control. Power interruptions of longer duration will cause the control to recycle.

NOTE: Controls with UV amplifiers (MAUV1 and MAUV1T) are always powered via Terminal #1.

5. In the event that main flame is not detected by the end of the trial for ignition period, the primary main fuel valve and the spark ignition are de-energized. A safety lockout occurs which de-energizes the burner motor and energizes the lockout alarm circuit (**Alarm** LED lit) approximately 30 seconds after the safety lockout occurs.
6. In the event of a flame failure during a firing period, the secondary main fuel valve (if used) is de-energized and the spark ignition is re-energized. A 10 sec. re-light trial for ignition is initiated (**PTFI** LED lit). If flame is detected (**Flame** LED lit), the secondary main fuel valve (if used) is re-energized and the spark ignition de-energized. If flame is not detected during the trial for ignition period, the primary main fuel valve and the spark ignition are de-energized. A safety lockout occurs, which de-energizes the burner motor and energizes the lockout alarm circuit (**Alarm** LED lit) approximately 30 seconds after the safety lockout occurs.

7. Manual reset is required following and safety lockout.

NOTE: Wait 10 seconds after lockout before resetting the control.

Standing Pilot Burners

When using an MP100 or MP100E with an MARTI or MARTIT amplifier to control a burner having a standing pilot, clip out the red wire loop close to the edge of the circuit board. This eliminates pilot proving when the main burner is off and requires pilot flame proving during the subsequent start-up.

TIMING CHART

TYPE MP100

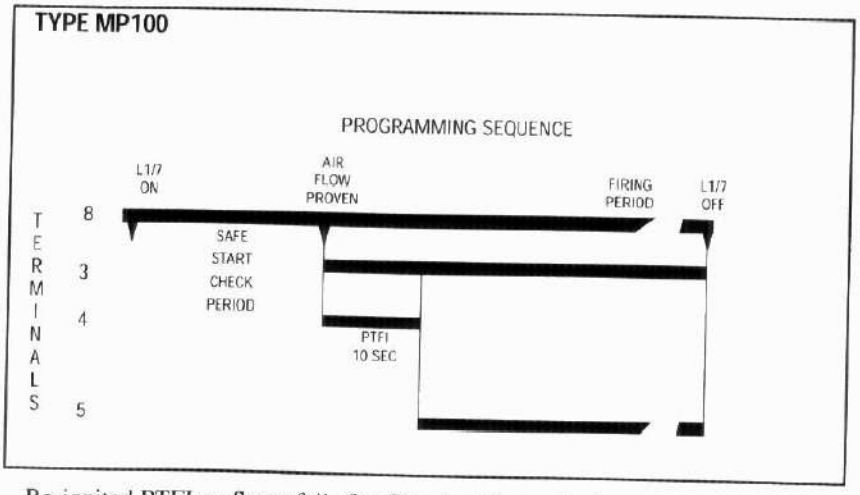

Re-ignited PTFI on flame fail after Terminal 5 energized.

Recycle on loss of air flow after flame proven.

MP101

Same as MP100 but will tolerate flame signal during "Off" cycle.

APPLICATION AND FUNCTION - MP101

The MP101 operates in the same manner as the MP100 with the following exception. The MP101 programmer module will not lock out if flame signal is detected during the off cycle (no power on terminal 7). If flame signal is present when power is applied to terminal 7, the control will not lock out until the air flow switch is proven closed (power on terminal 6).

Consult the factory before installing the programmer.

APPLICATION AND FUNCTION MP230

The MP230 Programmer Module directly replaces the Fireye M2 Series "recycle" controls and M3 Series "non-recycle" controls. It provides prepurge, ignition and flame safeguard for heating and process light oil or gas fired burners. The "recycle" or "non-recycle" operation is determined by the position of dipswitch #8 on the Programmer Module. Purge timing, as well as trial for ignition timing is also set by the dipswitch settings. See PROGRAMMER DIP-SWITCH SETTINGS on page 11.

Amplifier and Scanner Selection

The Amplifier Module should be selected base on the type of flame scanner (UV scanner, photocell, or flame rod), and the required Flame Failure Response Time (F.F.R.T.). See ORDERING INFORMATION on page 4 for the appropriate part numbers.

Pilot Ignited Burners - "Recycle" Operation

With dipswitch #8 in the "recycle" position, the typical wiring arrangement illustrated on pages 26 (MC120, MC230) or 28 (MC120P) for pilot ignited burners provides the following function:

1. With power applied, and the limit-operating control circuit closed (**Operating Control** LED lit), the burner motor circuit is energized. The air flow circuit closes (**Air Flow** LED lit).
2. Following the prepurge period (as determined by dipswitches #1 through #5), KL-1 closes, energizing Terminal 3 which powers the pilot gas valve and Terminal 4 which powers the spark ignition. A five or ten sec. (as determined by dipswitches #6 or #7) trial for ignition is initiated (**PTFI** LED lit).
3. When pilot flame is detected (**Flame** LED lit), KF-1 closes, energizing Terminal 5 which powers the main fuel valve, KF-2 opens de-energizing Terminal 4 which shuts off the spark ignition.
4. When the operating control opens its circuit, or if a power failure occurs, the entire system is de-energized. Power interruptions in the millisecond range do not affect the operation of the control. Power interruptions of longer duration will cause the control to recycle.

NOTE: Controls with UV amplifiers (MAUV1 and MAUV1T) are always powered via Terminal #1.

5. In the event the pilot flame is not detected by the end of trial for ignition period, the pilot gas valve and spark ignition are de-energized. A safety lockout occurs which de-energizes the burner motor and energizes the lockout alarm circuit (**Alarm** LED lit) approximately 30 seconds after the safety lockout occurs.
6. In the event of a flame failure during a firing period, the pilot and main fuel valves are de-energized. Following the prepurge period (as determined by dipswitches #1 through #5), with proven air flow (**Air Flow** LED lit), the pilot gas valve and spark ignition are re-energized and a five or ten sec. (as determined by dipswitches #6 or #7) trial for ignition is initiated (**PTFI** LED lit). If pilot flame is detected (**Flame** LED lit), the main fuel valve is energized, the spark ignition is de-energized. If the pilot flame is not detected during the trial for ignition period, the pilot gas valve and spark ignition are de-energized. A safety lockout occurs which de-energizes the burner motor and energizes the lockout alarm circuit (**Alarm** LED lit) approximately 30 seconds after the safety lockout occurs.
7. Manual reset is required following any safety lockout.

NOTE: Wait 10 seconds after lockout before resetting the control.

Pilot Ignited Burners - "Non-recycle" Operation

The function of "non-recycle" pilot ignited burners is the same as described for the "recycle" controls, except that the "non-recycle" operation will lock out following any flame failure. "Recycle" or "non-recycle" operation is determined by the position of dipswitch #8. See Programmer dipswitch settings on page 12.

Direct Spark Ignited Burners - "Recycle" Operation

With dipswitch #8 in the "recycle" position, the typical wiring arrangement illustrated on pages 26 (MC120, MC230) or 28 (MC120P) for direct spark ignited burners provides the following function:

1. With power applied, and the limit-operating control circuit closed (**Operating Control** LED lit), the burner motor circuit is energized. The air flow switch circuit closes (**Air Flow** LED lit).
2. Following the selected prepurge period (as determined by dipswitches #1 through #5), KL-1 closes, energizing Terminal 3 which powers the primary main fuel valve, and Terminal 4 which powers the spark ignition. A five or ten second (as determined by dipswitches #6 and #7) trial for ignition is initiated (**PTFI** LED lit).

3. When pilot flame is detected (**Flame** LED lit), KF-1 closes, energizing Terminal 5 which powers the secondary main fuel valve, and KF-2 opens, de-energizing Terminal 4 which shuts off the spark ignition.
4. When the operating control opens its circuit, or if a power failure occurs, the control is de-energized. Power interruptions in the millisecond range do not affect the operation of the control. Power interruptions at longer duration will cause the control to recycle.

NOTE: Controls with UV amplifiers (MAUV1 and MAUV1T) are always powered via Terminal #1.

5. In the event the pilot flame is not detected by the end of the trial for ignition period, the pilot gas valve and spark ignition are de-energized. A safety lockout occurs which de-energizes the burner motor and energizes the lockout alarm circuit (**Alarm** LED lit) approximately 30 seconds after the safety lockout occurs.
6. In the event of a flame failure during a firing period, all fuel valves are de-energized. Following the prepurge period (as determined by dipswitches #1 through #5), with proven air flow (**Air Flow** LED lit), the primary main fuel valve and spark ignition are re-energized and a five or ten second (as determined by dipswitches #6 and #7) trial for ignition period is initiated (**PTFI** LED lit). If flame is detected (**Flame** LED lit), the secondary main fuel valve (if used) is energized. The spark ignition is de-energized. If flame is not detected during the trial for ignition period, the primary main fuel valve and spark ignition are de-energized. A safety lockout occurs, de-energizing the burner motor and energizing the lockout alarm circuit (**Alarm** LED lit) approximately 30 seconds after the safety lockout occurs.
7. Manual reset is required following any safety lockout.

NOTE: Wait 10 seconds after lockout before resetting the control.

Direct Spark Ignited Burners - "Non-recycle" Operation

The function of "non-recycle" direct spark ignited burners is the same as described for the "recycle" controls, except that the "non-recycle" operation will lock out following any flame failure. "Recycle" or "non-recycle" operation is determined by the position of dipswitch #8. See Programmer Dipswitch Settings on page 12.

TIMING CHART

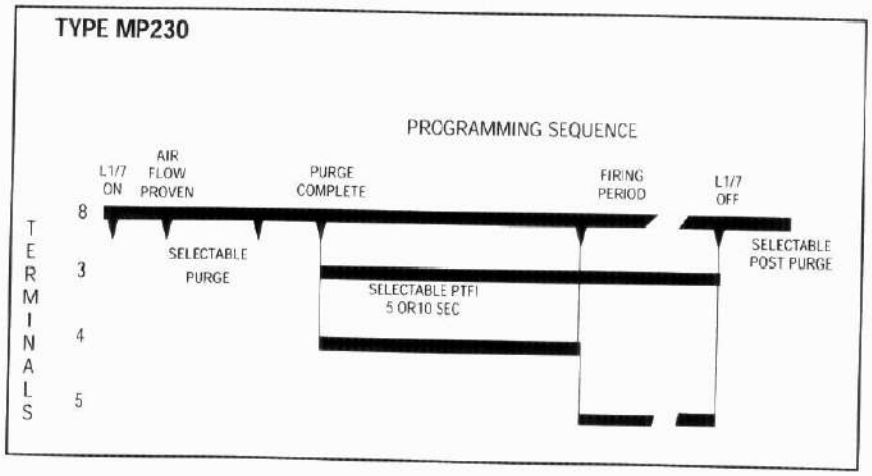

Selectable Recycle/Non-Recycle operation on loss of flame after Terminal 5 energized.

Recycle on loss of air flow after flame proven.

APPLICATION AND FUNCTION - MP230H

The MP230H Programmer Module is designed as a direct replacement for the Fireye M3H Series "non-recycle" controls, as well as providing a "recycle" operation for the control. It provides prepurge, ignition and flame safeguard for heating and process light oil or gas fired burners. The "recycle" or "non-recycle" operation is determined by the position of dipswitch #8 on the Programmer Module. Purge timing as well as trial for ignition timing is also set by the dipswitch settings. See Programmer Dipswitch Settings on page 12.

All installation, wiring, functions, testing instructions for the MP230 control are applicable to the MP230H. The MP230H provides an additional function whereby the powering of Terminal 5 is delayed for eight (8) seconds after flame is detected, and Terminal 4 remains powered during the eight (8) second delay.

This additional function is offered primarily for two-stage light oil burners, to assure a specific delay between light off of the first and second stage, and to provide additional ignition timing to improve flame stabilization.

Amplifier and Scanner Selection

The Amplifier Module should be selected based on the type of flame scanner (UV scanner, photocell, or flame rod), and the required Flame Failure response Time (F.F.R.T.). See ORDERING INFORMATION on page 4 for the appropriate part numbers.

TIMING CHART

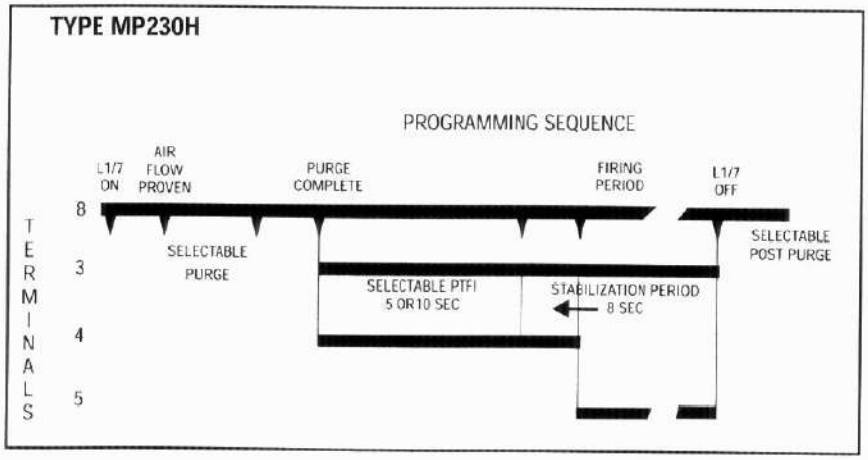

Pilot Stabilization timing begins as soon as flame is proven.

Selectable Recycle/Non-Recycle operation on loss of flame after Terminal 5 is energized.

APPLICATION AND FUNCTION - MP560, MP561, MP562

The MP560, MP561, MP562 Programmer Modules are designed as a direct replacement for the Fireye M5 Series "non-recycle" controls and M6 Series "recycle" and "non-recycle" controls. It provides prepurge, ignition and flame safeguard for heating and process light oil or gas fired burners. The "recycle" or "non-recycle" operation is determined by the position of dipswitch #8 on the Programmer Module. Purge timing as well as trial for ignition timing is also set by the dipswitch settings. See PROGRAMMER DIPSWITCH SETTING on page 12.

A "run-check" switch is provided to assist in testing size, position, and stabilization of pilot in conjunction with the flame detector. See page 28.

Amplifier and Scanner Selection

The Amplifier Module should be selected based on the type of flame scanner (UV scanner, photocell, or flame rod), and the required Flame Failure Response Time (F.F.R.T.). See ORDERING INFORMATION on page 4 for the appropriate part numbers.

Pilot Ignited Burners - "Recycle" Operation

With dipswitch #8 in the "recycle" position, the typical wiring arrangement illustrated on pages 29 (MC120, MC230) or 30 (MC120P) for pilot ignited burners provides the following function:

1. With power applied, and the limit-operating control circuit closed (**Operating Control** LED lit), the burner motor circuit is energized. The air flow circuit closes (**Air Flow** LED lit).
2. Following the selected prepurge period (as determined by dipswitches #1 through #5), KL-1 and K1-1 close, energizing Terminals 3 and 4 which powers the pilot valve and the spark ignition. A 5 or 10 sec. (as determined by dipswitches #6 and #7) trial-for-ignition initiates (**PTFI** LED lit).
3. When pilot flame is detected (**Flame** LED lit), an 8 sec. pilot stabilization period begins followed by KF-1 closing. Ten seconds after KF-1 closes, Terminal 4 is de-energized.
4. When the operating control opens its circuit or if a power failure occurs, the control is de-energized. Power interruptions in the millisecond range do not affect the operation of the control. Power interruptions at longer duration will cause the control to recycle.

NOTE: Controls with UV amplifiers (MAUV1 and MAUV1T) are always powered via Terminal #1.

5. In the event the pilot flame is not detected by the end of trial for ignition period, the pilot valve and spark ignition are de-energized. A safety lockout occurs which de-energizes the burner motor and energizes the lockout alarm circuit (**Alarm** LED lit) approximately 30 seconds after the safety lockout occurs.
6. In the event of a flame failure during a firing period, the pilot and main fuel valves are de-energized. Following the prepurge period (as determined by dipswitches #1 through #5), with proven air flow (**Air Flow** LED lit), the pilot valve and spark ignition are re-energized and a 5 or 10 sec. (as determined by dipswitches #6 and #7) trial-for-ignition is initiated (**PTFI** LED lit). If pilot flame is detected (**Flame** LED lit), the main fuel valve is energized, the spark ignition and pilot are de-energized. If the pilot flame is not detected during the trial for ignition period, the pilot gas valve and spark ignition are de-energized. A safety lockout occurs which de-energizes the burner motor and energizes the lockout alarm circuit (**Alarm** LED lit) approximately 30 seconds after the safety lockout occurs.
7. Manual reset is required following any safety lockout.

NOTE: Wait 10 seconds after lockout before resetting the control.

TIMING CHART

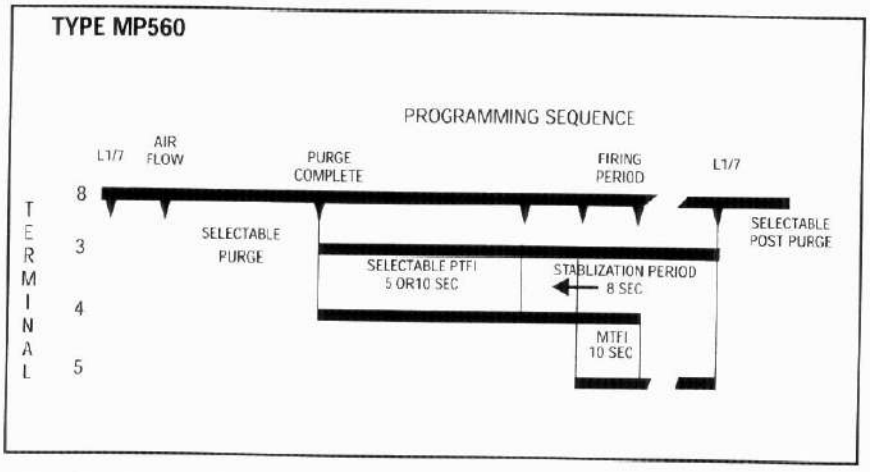

Pilot Stabilization timing begins as soon as flame is proven.

Selectable Recycle/Non-Recycle operation on loss of flame after Terminal 5 is energized.

Pilot Ignited Burners - "Non-recycle" Operation

The function of "non-recycle" pilot ignited burners is the same as described for the "recycle" controls, except that the "non-recycle" operation will lock out following any flame failure. "Recycle" or "non-recycle" operation is determined by the position of dipswitch #8. See Programmer Dipswitch Settings on page 11.

Direct Spark Ignited Burners - "Recycle" Operation

With dipswitch #8 in the "recycle" position, the typical wiring arrangement illustrated on page 28 (MC120, MC230) or 25 (MC120P) for direct spark ignited burners will provide the following function:

1. With power applied, and the limit-operating control circuit closed (**Operating Control** LED lit), the burner motor circuit is energized. The air flow circuit closes (**Air Flow** LED lit).
2. Following the selected prepurge period (as determined by dipswitches #1 through #5), KL-1 and K1-1 close, energizing Terminal 3 which powers the primary main fuel valve, and Terminal 4 which powers the spark ignition. A five or ten second (as determined by dipswitches #6 and #7) trial for ignition is initiated (**PTFI** LED lit).
3. When primary flame is detected (**Flame** LED lit), an 8 second stabilization period begins and KF-1 closes, energizing Terminal 5 which powers the main fuel valve. Ten seconds later K1-1 opens, de-energizing Terminal 4 which shuts off the spark ignition.
4. When the operating control opens its circuit, or if a power failure occurs, the control is de-energized. Power interruptions in the millisecond range do not affect the operation of the control. Power interruptions at longer duration will cause the control to recycle.

NOTE: Controls with UV amplifiers (MAUV1 and MAUV1T) are always powered via Terminal #1.

5. In the event the primary flame is not detected by the end of the trial for ignition period, the primary valve and spark ignition are de-energized. A safety lockout occurs which de-energizes the burner motor and energizes the lockout alarm circuit (**Alarm** LED lit) approximately 30 seconds after the safety lockout occurs.
6. In the event of a flame failure during a firing period, the pilot and main fuel valves are de-energized. Following the prepurge period (as determined by dipswitches #1 through #5), with proven air flow (**Air Flow** LED lit), the primary main fuel valve and spark ignition are re-energized and a 5 or 10 sec. (as determined by dipswitches #6 and #7) trial-for-ignition is initiated (**PTFI** LED lit). If flame is detected (**Flame** LED lit), the secondary main fuel valve (if used) is energized. The spark ignition

is de-energized. If flame is not detected during the trial for ignition period, the primary main fuel valve and spark ignition are de-energized. A safety lockout occurs which de-energizes the burner motor and energizes the lockout alarm circuit (**Alarm** LED lit) approximately 30 seconds after the safety lockout occurs.

7. Manual reset is required following a safety lockout.

NOTE: Wait 10 seconds after lockout before resetting the control.

Direct Spark Ignited Burners - "Non-recycle" Operation

The function of "non-recycle" direct spark ignited burners is the same as described for the "recycle" controls, except that the "non-recycle" operation will lock out following any flame failure. "Recycle" or "non-recycle" operation is determined by the position of dipswitch #8. See Programmer Dipswitch Settings on page 11.

APPLICATION AND FUNCTION — MP561

The MP561 operates in the same manner as the MP560 with the following exception. The MP561 programmer does not have the 8 second pilot stabilization period. KF-1 closes as soon as flame is detected. Terminal 4 is de-energized 10 seconds later.

TIMING CHART

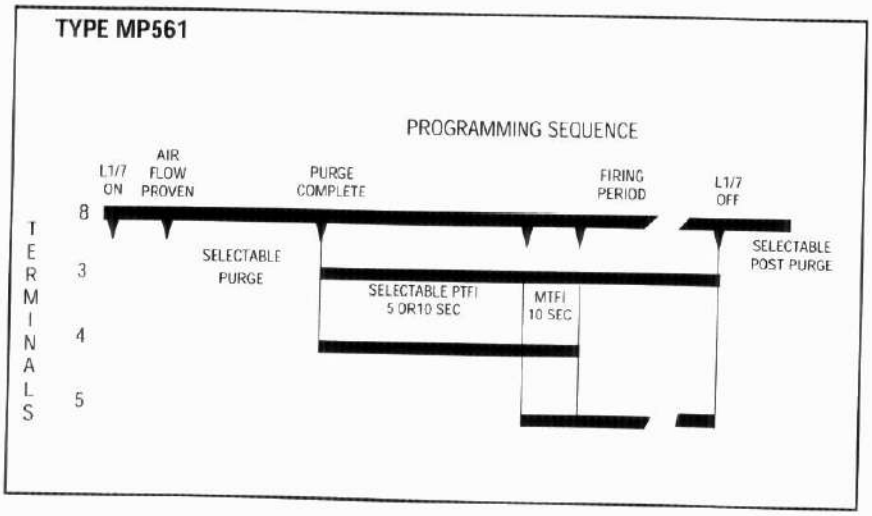

Selectable Recycle/Non-Recycle operation on loss of flame after Terminal 5 is energized.

APPLICATION AND FUNCTION - MP562

The MP562 operates in the same manner as the MP560 programmed for "Non-Recycle Operation" with the following exceptions.

1. On loss of air flow (terminals 8-6) during the purge period, the control will re-initiate the purge period once air flow is proven.
2. On loss of air flow (terminals 8-6) after the purge period has been completed, the control will initiate a safety shutdown and lockout
3. Dipswitch #6 is not functional on the MP562, MP562E programmers.

Note: The control will lockout on loss of flame during the trial for ignition period or main flame.

TIMING CHART

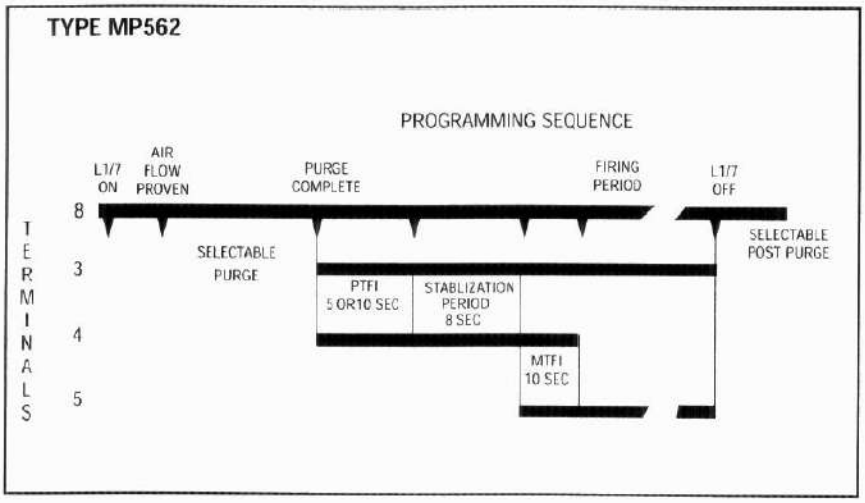

Pilot stabilization timing begins as soon as flame is proven.

Lockout on loss of air flow after flame is proven.

Lockout on flame fail.

INSTALLATION TESTING

Use of Test Meter (All Controls)

Testing the Fireye Modular M-Series II Controls requires the use of a test AC-DC multimeter, with a 1,000 ohm/volt DC rating or greater, or a digital meter with 500K input impedance or greater.

With the test meter on the DC scale, and the test meter leads inserted into the test jacks on the amplifier module, a **steady** DC voltage reading of **4.0 to 6.0 volts (for UV amplifiers) and 6 to 18 volts (for flame rectification amplifiers)** should be obtained when the controls are detecting flame, and zero volts when no flame is present.

With the test meter on the AC scale, line and load voltages may be measured at the identified test points on the chassis.

On the Modular M-Series II controls utilizing a flame rectification amplifier, a micro-ammeter may be connected in series with the wire to Terminal S2. Normal flame will produce a meter reading between 4 and 10 micro-amps.

Flame Signal Testing (All Controls)

1. Manually shut off the main fuel valve for a pilot ignited burner, or the secondary fuel valve for a direct spark ignited burner.
2. Set the test meter on the DC scale and insert the test leads into the test jacks on the amplifier module. (If the meter reads backwards, reverse the meter leads). Red - Plus, Black - Negative.
3. Initiate a normal startup.
4. When flame is established, the test reading should be normal: a steady DC voltage reading of 4.0 to 6.0 volts (for UV amplifiers) and 6 to 18 volts (for flame rectification amplifiers).
5. Inadequate flame signal may be improved by:
   a. Assuring that the flame detector and wiring installations have followed the instructions on pages 3 and 5.
   b Assuring that the flame detector is clean and within the ambient temperature limits.
   c Assuring that the flame is sufficiently large to detect.
   d Assuring that the flame quality (fuel to air ratio, combustion air velocity) is satisfactory.
   e Trying a shorter sight pipe, or increasing the sight pipe diameter.

WARNING: Before making a pilot flame test, manually shut off the fuel supply to the main burner.

Normal Pilot Flame Test (MP560, MP561, MP562 Programmers Only)

1. Place the "Run-Check" switch in the "Check" position.
2. Turn power on and initiate a normal startup.
3. Observe the pilot flame signal on the test meter. If the average flame is below normal, a steady DC voltage reading of 4.0 to 6.0 volts (for UV amplifiers) and 14 to 18 volts (for flame rectification amplifiers), re-adjust the pilot flame or realign the flame detector.

WARNING: DO NOT TOUCH a flame rectification rod with power applied.

4. During the pilot flame test and adjustment period, if flame is not detected within 30 seconds, the control will lock out. To reestablish the pilot flame trial for ignition (P.T.F.I.), manual reset of the lockout switch is required, and a complete repurge is accomplished.
5. When UV detection is used, a test is required to verify that UV radiation from the ignition spark is not being detected. To accomplish this, manually shut off both pilot and main fuels. Initiate a normal startup, observe the test meter which should read no more than 1/2 volt DC. If more than 1/2 volt DC is observed, realign the UV scanner, and/or shield the spark from the scanner's view.
6. Move the "Run-Check" switch to the "Run" position, check pilot flame failure response time by manually shutting off the pilot fuel and then initiate a normal startup. With no pilot flame present, the control will de-energize the pilot assembly at the end of the trial for ignition interval (5 or 10 seconds, selected by dipswitches #6 and #7 - see Programmer Dipswitch Settings on page 11), and the control will lock out.

WARNING: The minimum pilot test must be accomplished by a trained and qualified burner technician.

Minimum Pilot Test

This test insures that the flame detector will not sense a pilot flame too small to light the main flame reliably. It must be made on every new installation as well as following the repositioning of the flame detector. **This procedure should not be used on a direct spark ignited burner.**

1. Manually shut off the fuel to the main burner.
2. Place the "Run-Check" switch in the "Check" position. (MP560 Programmers only).
3. Connect a test meter to the test jacks on the Amplifier Module.
4. Initiate a normal startup.
5. Reduce the fuel to the pilot until the DC voltmeter reads 3.5 volts for UV scanners. See WARNING below. This is the minimum pilot. For flame rectification the flame signal for minimum pilot varies depending on the application. See WARNING below.
6. Return the "Check-Run" switch to the "Run" position. (MP560 Programmer only).
7. Slowly turn on the main fuel and insure that the main flame lights off promptly and normally.

WARNING: If light off is delayed, shut off the power to the installation. Realign the flame detector so that pilot flame detection requires a larger pilot flame. Repeat this test until the main flame lights reliably with minimum pilot.

8. After the minimum pilot test is completed satisfactorily, increase the pilot flame to normal size, and observe that the main flame is properly established during a normal cycle ("Run-Check" switch in the "Run" position).

Flame Failure Test

1. Temporarily connect spark ignition and pilot valve to Terminal #3.
2. Initiate a normal startup.
3. Manually shut off all fuel and observe the loss of flame signal on the test meter.
4. If flame signal does not reduce to zero within the flame failure response time of the control (F.F.R.T. determined by selection of amplifier), verify that the UV flame detector is not actuated by the spark. If spark is detected, a metallic shield or relocation of the UV detector sight pipe is required.



5. **IMPORTANT:** When the test is completed, reconnect the spark ignition to Terminal #4.

Recommendation

Periodic Safety Check: Test the complete flame safeguard system at least once a month. This test should verify flame failure safety shutdown and positive fuel cutoff when the fuel valve is de-energized.

MAINTENANCE

UV-eye scanner: The UV tube must be kept clean. Use a clean cloth with detergent as often as operating conditions require. Remove any residual detergent.

ROTATION

It is recommended that units purchased as spares be rotated periodically, so that each unit will be placed in operation every 90 days.

M-SERIES II SERVICE GUIDE

SITUATION #1 NORMAL LOCKOUT

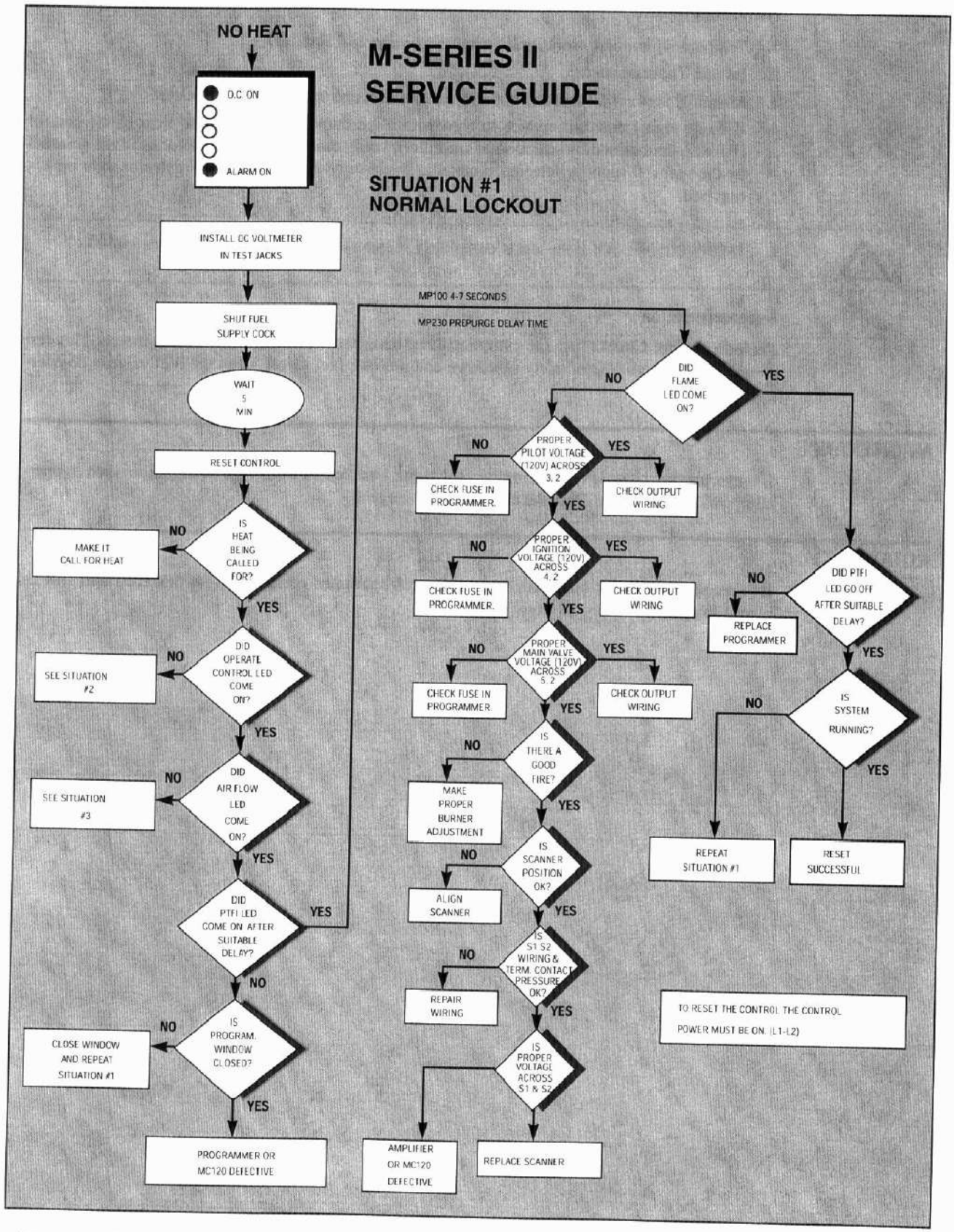

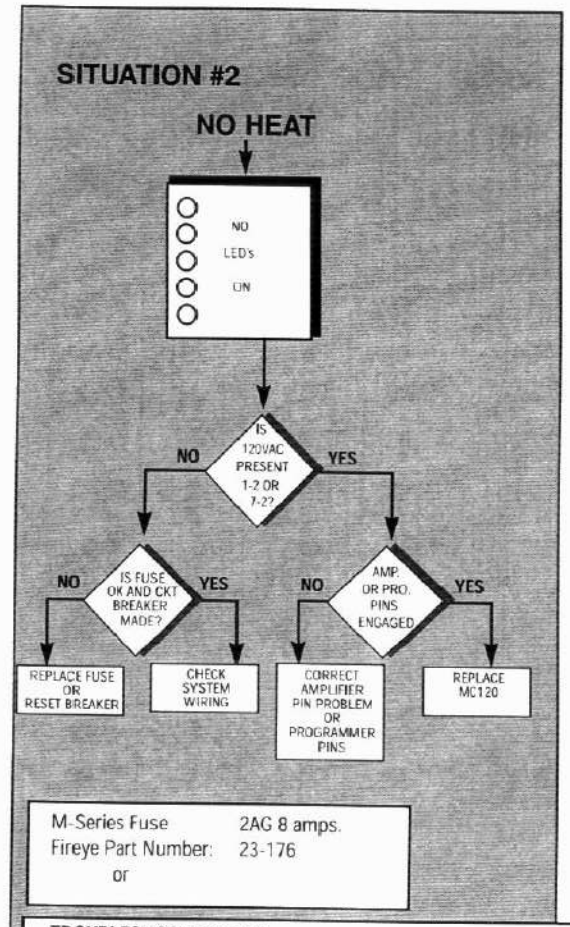

M-Series Fuse 2AG 8 amps.
Fireye Part Number: 23-176
or

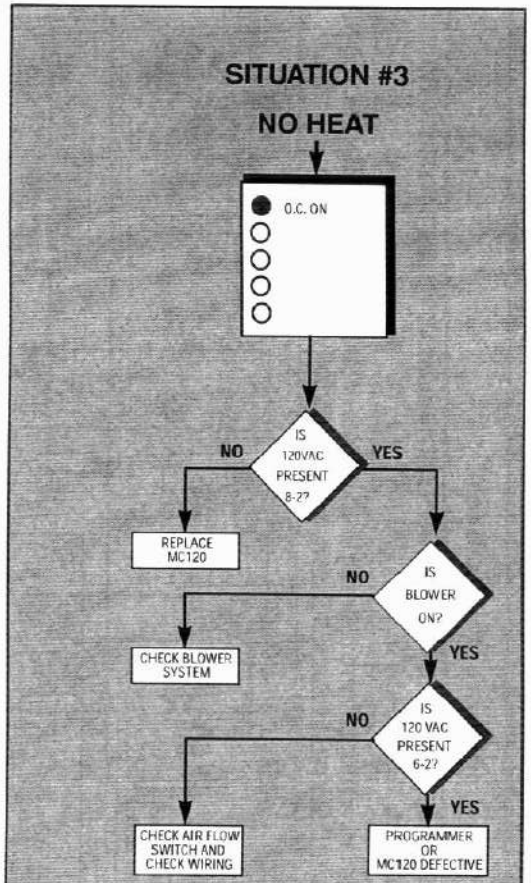

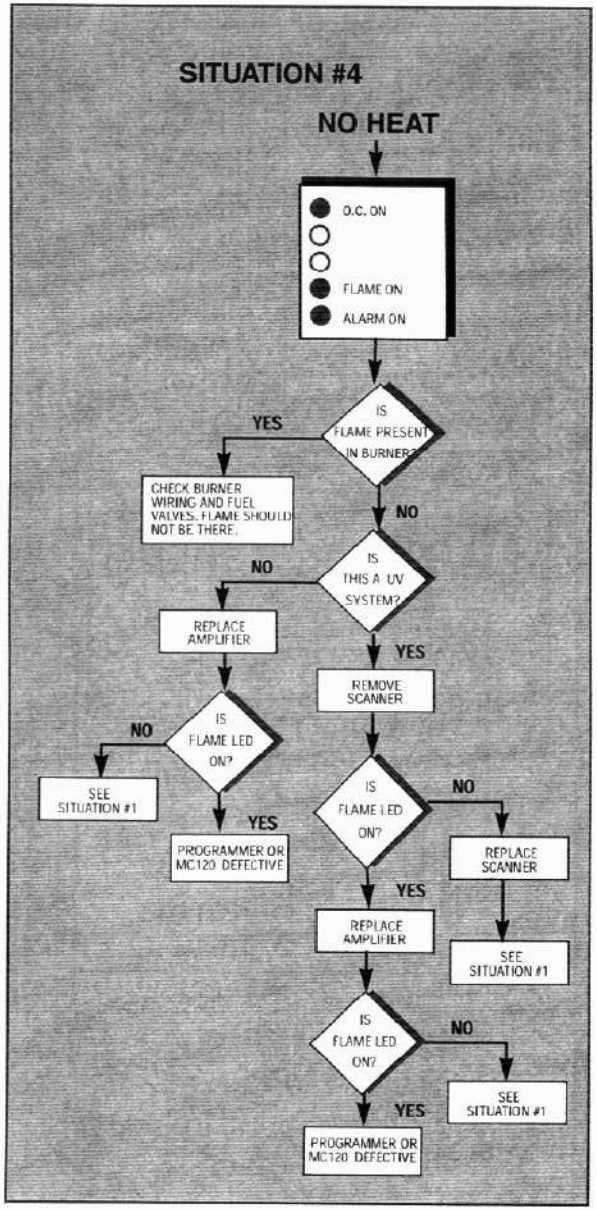

TROUBLESHOOTING TIPS

1. Verify that there is a solid earth ground wire brought to the panel that the Fireye base is mounted to.
2. In a rectification system, verify that terminal S1 is solidly earth grounded, and confirm that the flame rod is aligned so it doesn't droop near the ignition spark.
3. Confirm that there is no measurable voltage present between the ground screw and terminal 2 (neutral).
4. Confirm that the 120 volt AC supply has its neutral leg earth grounded at the supply. (floating isolation transformers can cause problems).
5. Confirm that the ignition transformer's secondary winding is solidly earth grounded. The grounding method is usually through the transformer case. Dirt, paint, loose mounting hardware, etc., can all be factors.
6. There may be a problem with transients in the main power supply. If you think this may be the problem, you may want to run a ground wire directly from the pilot assembly back to the electrical panel where the Fireye control is mounted.

FIGURE 1. TYPICAL MP100, MP100E, MP101, MP230, and MP230H WIRING ARRANGEMENT FOR PILOT IGNITED BURNER. **MC120, MC120R, MC230, MC230R CHASSIS ONLY.**

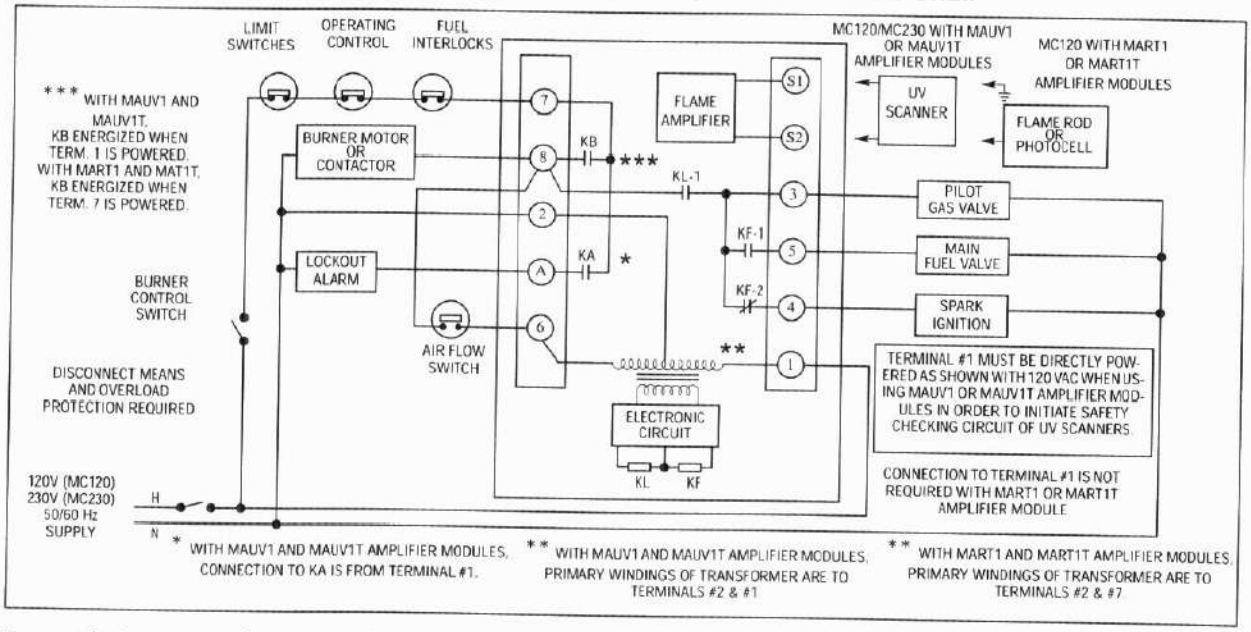

Use moisture resistant wire suitable for at least 90

CAUTION: When powered, 560 VAC across S1, S2 with MAUV1 and MAUV1T; 260 VAC across S1, S2 with MART1 and MART1T.

FIGURE 2. TYPICAL MP100, MP100E, MP101, MP230, AND MP230H WIRING ARRANGEMENT FOR DIRECT SPARK IGNITED BURNER **MC120, MC120R, MC230, MC230R CHASSIS ONLY.**

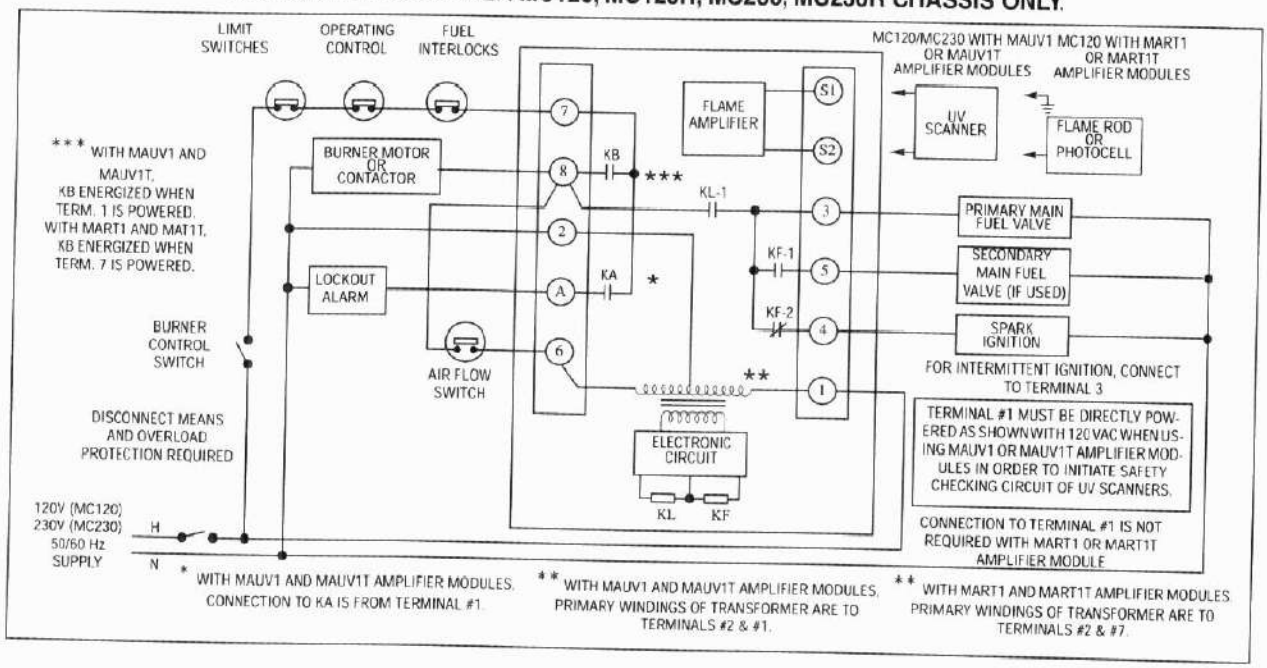

Use moisture resistant wire suitable for at least 90

CAUTION: When powered, 560 VAC across S1, S2 with MAUV1 and MAUV1T; 260 VAC across S1, S2 with MART1 and MART1T.

CAUTION: Control wiring procedures which deviate from those shown in the diagrams may bypass safety functions designed in the control. Check with the Fireye Representative before deviating from the recommended wiring diagrams.

FIGURE 3. ALTERNATE WIRING ARRANGMENT FOR MP100 CONTROLS

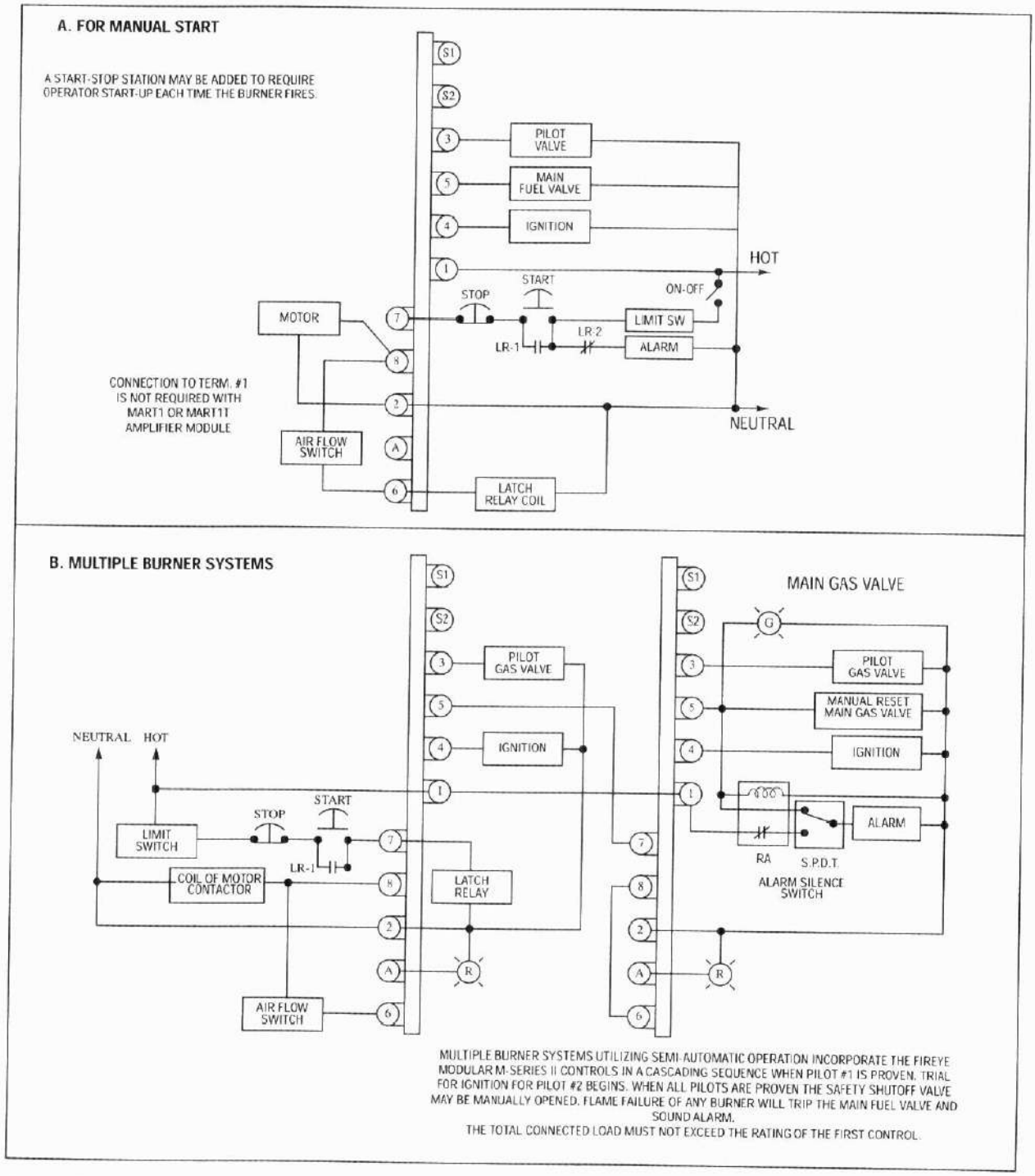

Use moisture resistant wire suitable for at least 90°C.

CAUTION: Control wiring procedures which deviate from those shown in the diagrams may bypass safety functions designed in the control. Check with the Fireye Representative before deviating from the recommended wiring diagrams.

FIGURE 4. TYPICAL MP560, MP561, MP562 WIRING ARRANGEMENT FOR PILOTED IGNITED BURNER. **MC120, MC120R, MC230, MC230R, CHASSIS ONLY.**

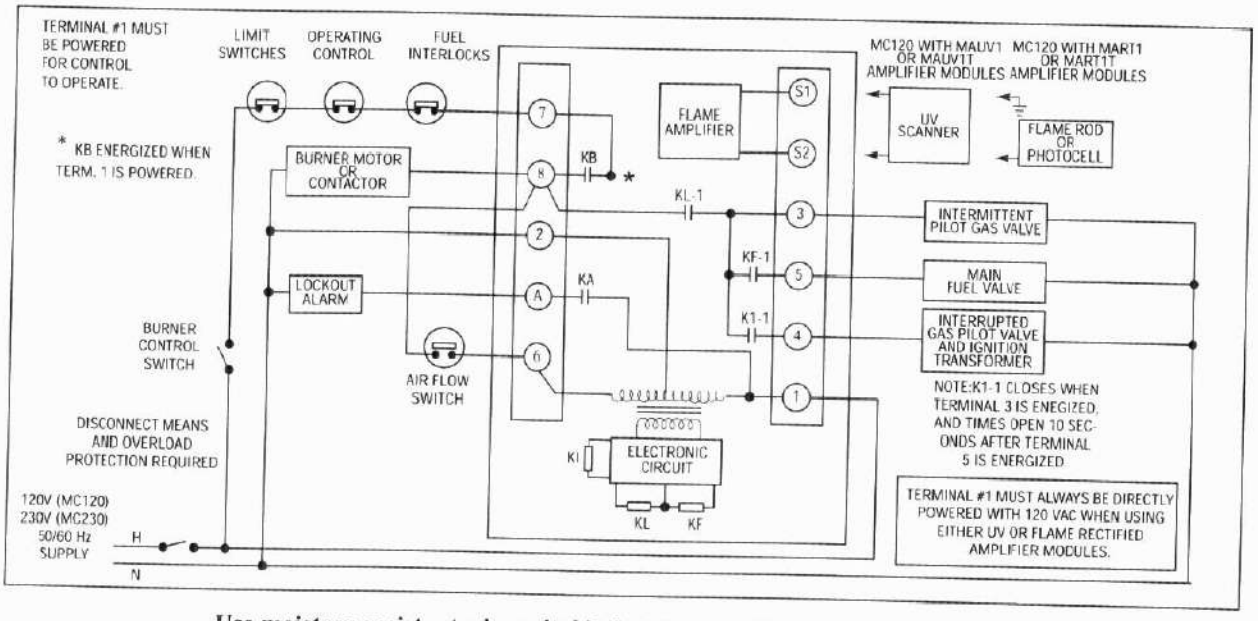

Use moisture resistant wire suitable for at least 90°C.

CAUTION: When powered, 560 VAC across S1, S2 with MAUV1 and MAUV1T; 260 VAC across S1, S2 with MART1 and MART1T.

FIGURE 5. TYPICAL MP560, MP561, MP562 WIRING ARRANGEMENT FOR DIRECT SPARK IGNITED BURNER. **MC120, MC120R, MC230, MC230R CHASSIS ONLY.**

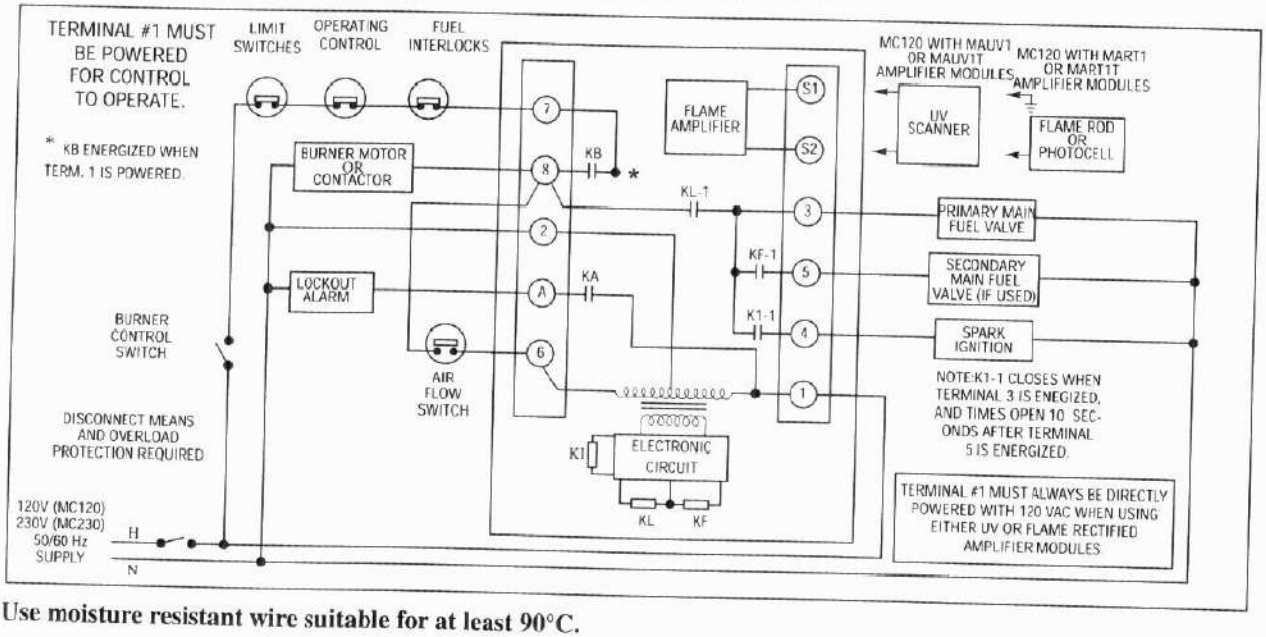

Use moisture resistant wire suitable for at least 90°C.

FIGURE 6. TYPICAL MP100, MP100E, MP101, MP230, and MP230H WIRING ARRANGEMENT FOR PILOT IGNITED BURNER. **MC120P CHASSIS ONLY.**

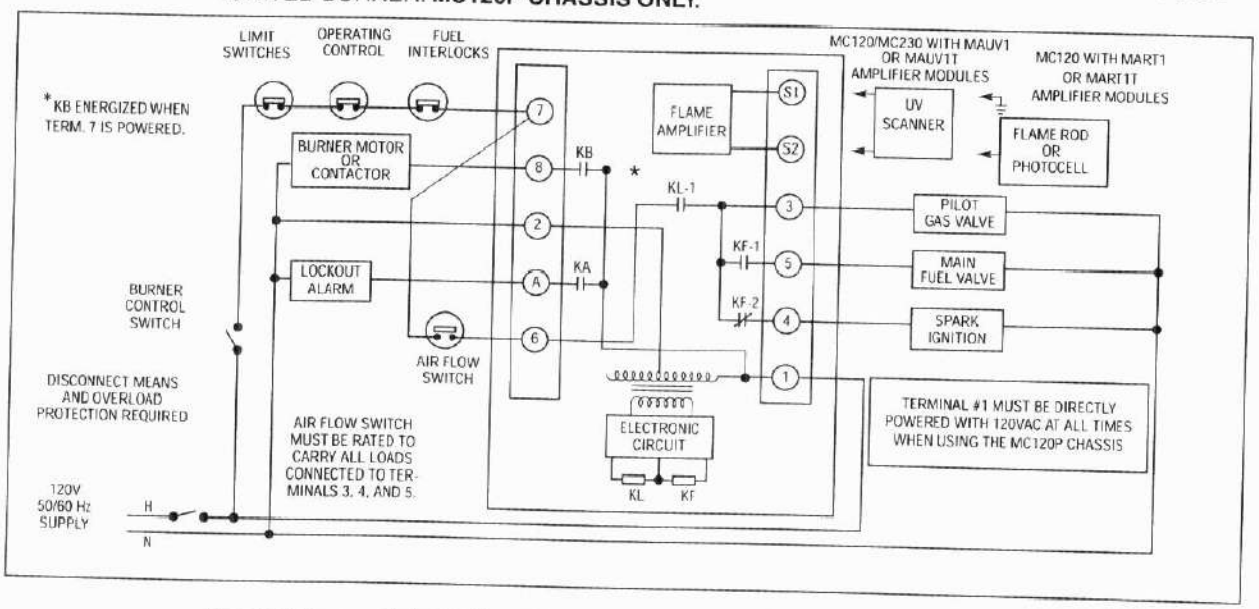

Use moisture resistant wire suitable for at least 90°C.

CAUTION: When powered, 560 VAC across S1, S2 with MAUV1 and MAUV1T; 260 VAC across S1, S2 with MART1 and MART1T.

FIGURE 7. TYPICAL MP100, MP100E, MP101, MP230, AND MP230H WIRING ARRANGEMENT FOR DIRECT SPARK IGNITED BURNER. **MC120P CHASSIS ONLY.**,

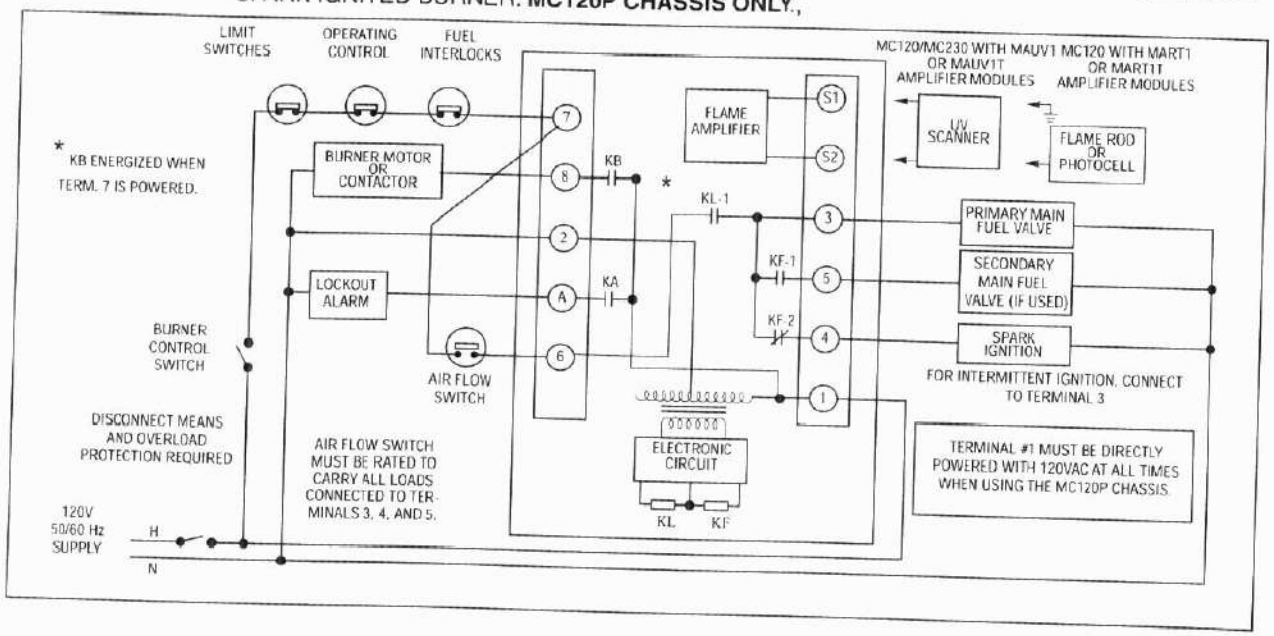

Use moisture resistant wire suitable for at least 90°C.

CAUTION: When powered, 560 VAC across S1, S2 with MAUV1 and MAUV1T; 260 VAC across S1, S2 with MART1 and MART1T.

CAUTION: Control wiring procedures which deviate from those shown in the diagrams may bypass safety functions designed in the control. Check with the Fireye Representative before deviating from the recommended wiring diagrams.

FIGURE 8. TYPICAL MP560, MP561, MP562 WIRING ARRANGEMENT FOR PILOTED IGNITED BURNER. **MC120P CHASSIS ONLY.**

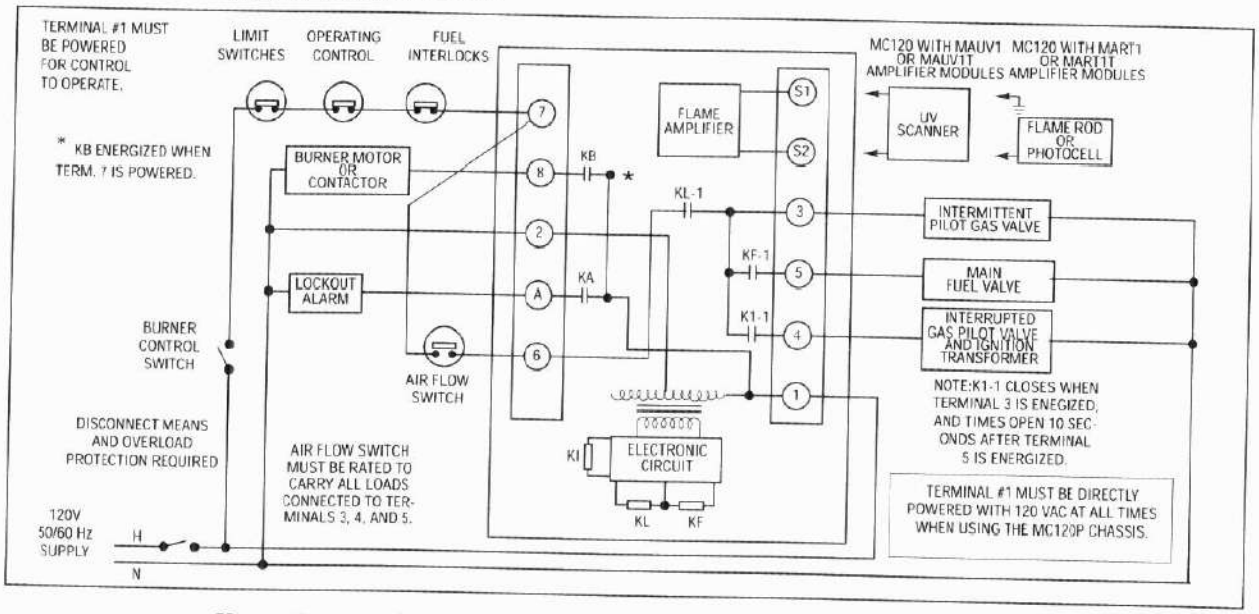

Use moisture resistant wire suitable for at least 90°C.

CAUTION: When powered, 560 VAC across S1, S2 with MAUV1 and MAUV1T; 260 VAC across S1, S2 with MART1 and MART1T.

FIGURE 9. TYPICAL MP560, MP561, MP562 WIRING ARRANGEMENT FOR DIRECT SPARK IGNITED BURNER. **MC120P CHASSIS ONLY.**

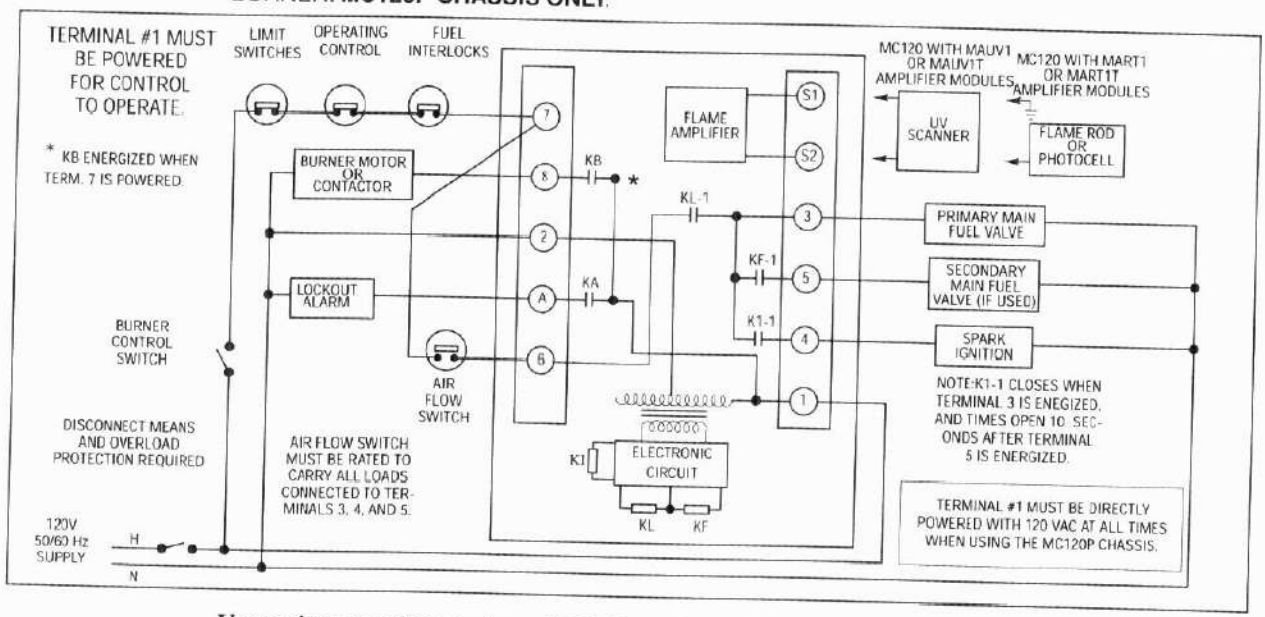

Use moisture resistant wire suitable for at least 90°C.

CAUTION: When powered, 560 VAC across S1, S2 with MAUV1 and MAUV1T; 260 VAC across S1, S2 with MART1 and MART1T.

CAUTION: Control wiring procedures which deviate from those shown in the diagrams may bypass safety functions designed in the control. Check with the Fireye Representative before deviating from the recommended wiring diagrams.

M-SERIES II CROSS REFERENCE LISTING

M-SERIES	M-SERIES II REPLACEMENT MODULES			
Part Number	Chassis	Amplifier	Programmer	Programmer Dipswitch #8
UVM1D	MC120	MAUV1T	MP100	N/A
UVM1F	MC120	MAUV1	MP100	N/A
TFM1D	MC120	MART1T	MP100	See Note #1
TFM1F	MC120	MART1	MP100	See Note #1
UVM2	MC120	MAUV1	MP230	OFF
TFM2	MC120	MART1	MP230	OFF
UVM3	MC120	MAUV1	MP230	ON
TFM3	MC120	MART1	MP230	ON
UVM3H	MC120	MAUV1	MP230H	ON
TFM3H	MC120	MART1	MP230H	ON
UVM5	MC120	MAUV1	MP560	ON
UVM6	MC120	MAUV1	MP560	See Note #2

- N/A — Not Applicable
- Programmer Dipswitches apply to MP230, MP230H, and MP560 Programmers
- Dipswitch #8 sets Recycle / Non-Recycle Operation. (ON = Non-Recycle, OFF = Recycle)
- MP560 Programmer Module has "Check-Run" Switch.
- Note 1: For standing pilot, clip out red jumper on MP100.
- Note 2: Dipswitch #8 - ON when red jumper of UVM6 is clipped. Otherwise, Dipswitch #8 = OFF.

M-SERIES TIMING CARDS	M-SERIES II PROGRAMMER DIPSWITCH SETTINGS						
	#1	#2	#3	#4	#5	#6	#7
MT55	ON	OFF	OFF	OFF	OFF	ON	OFF
MT74	OFF	ON	OFF	OFF	OFF	ON	OFF
MT304	OFF	OFF	ON	OFF	OFF	ON	OFF
MT710	OFF	ON	OFF	OFF	OFF	OFF	ON
MT904	OFF	OFF	ON	ON	OFF	ON	OFF
MT3010	OFF	OFF	ON	OFF	OFF	OFF	ON
MT6010	OFF	OFF	OFF	ON	OFF	OFF	ON
MT9010	OFF	OFF	ON	ON	OFF	OFF	ON

- Dipswitches #1 through #5 set Purge Timing.
- Dipswitches #6 and #7 set TFI Timing.

Dipswitch #	Off	On	
1	-	5	PURGE TIMING Values are Additive
2	-	7	
3	-	30	
4	-	60	
5	-	240	
6	-	5	TFI TIMING
7	-	10	
8	Recycle	Non-Recycle	

NOTICE

When Fireye products are combined with equipment manufactured by others and/or integrated into systems designed or manufactured by others, the Fireye warranty, as stated in its General Terms and Conditions of Sale, pertains only to the Fireye products and not to any other equipment or to the combined system or its overall performance.

WARRANTIES

FIREYE guarantees for *one year from the date of installation or 18 months from date of manufacture* of its products to replace, or, at its option, to repair any product or part thereof (except lamps, electronic tubes and photocells) which is found defective in material or workmanship or which otherwise fails to conform to the description of the product on the face of its sales order. **THE FOREGOING IS IN LIEU OF ALL OTHER WARRANTIES AND FIREYE MAKES NO WARRANTY OF MERCHANTABILITY OR ANY OTHER WARRANTY, EXPRESS OR IMPLIED.** Except as specifically stated in these general terms and conditions of sale, remedies with respect to any product or part number manufactured or sold by Fireye shall be limited exclusively to the right to replacement or repair as above provided. In no event shall Fireye be liable for consequential or special damages of any nature that may arise in connection with such product or part.

FIREYE
3 Manchester Road
Derry, New Hampshire 03038
www.fireye.com

C-4000
MAY 2002
(Supersedes July 2000)

A Kidde Company



MP100, MP100E, MP101, MP102, MP102E, MP230, MP230H, MP560, MP561, and MP562

PROGRAMMER MODULES FOR USE WITH THE FIREYE MODULAR M-SERIES II CONTROL

DESCRIPTION

The Fireye MP100, MP100E, MP101, MP102, MP102E, MP230, MP230H, MP560, MP561 and MP562 Programmer Modules are used with the Fireye Modular M-Series II control. The operational characteristics of the control are determined by the selection of the programmer module (e.g. re-ignition, 2-stage capability, pilot cutoff, etc.). The programmer module incorporates a plug-in design for easy installation.

Some programmer modules (MP230, MP230H, MP560, MP561, and MP562) are equipped with a series of dipswitches to select Purge Timing. Pilot Trial for Ignition (PTFI) Timing, and Recycle or Non-Recycle operation. LED indicator lights are on all programmer modules, indicating the operating status of the control. A "check-run" switch is provided on the MP560, MP561 and MP562 programmer modules to assist in testing size and stabilization of the pilot.

Flame Failure Response Time (FFRT) is determined by the selection of the amplifier module. Test jacks are also provided on the flame amplifier module to permit flame signal measurement during operation. For proper and safe application of this product, you must refer to Fireye bulletin C-4000 or C-4000E for a detailed description of the various programmer modules, including installation instructions, amplifier selection, operating sequences for each programmer module, etc.

WARNING: Selection of this control for a particular application should be made by a competent professional, licensed by a state or other government agency. Inappropriate application of this product could result in an unsafe condition hazardous to life and property. Installation should not be considered complete until pilot turndown and other appropriate performance tests have been successfully completed.

PROGRAMMER MODULE SELECTION

Part Number	DESCRIPTION
MP100/MP100E	Relight operation.
MP101	Same as MP100, except will ignore flame signal in off cycle.
MP102/MP102E	Operates like the MP100, except the standing pilot and relight features are eliminated. Ignition safety time is 5 seconds. Control will lockout on flame failure.
MP230	Selectable purge timing, trial-for-ignition timing, and recycle/non-recycle operation.
MP230H	Selectable purge timing, trial-for-ignition timing, pilot stabilizing period, and recycle/non-recycle operation. 10 second main flame trial-for-ignition. For use with two-stage burners.
MP560	Selectable purge timing, pilot-trial-for-ignition timing, pilot stabilizing period, and recycle/non-recycle operation. 10 second main flame trial-for-ignition, check-run switch.
MP561	Selectable purge timing, pilot-trial-for-ignition timing, and recycle/non-recycle operation. 10 second main flame trial-for-ignition, check-run switch.
MP562	Same as MP560, with lockout on loss of air flow. Non-recycle operation.
Programmers with the suffix "E" (e.g. MP100E) are for use with the MC230 and MC230R chassis only.	

WARNING: Remove power from the control and remove the control from its wiring base before proceeding.

INSTALLATION

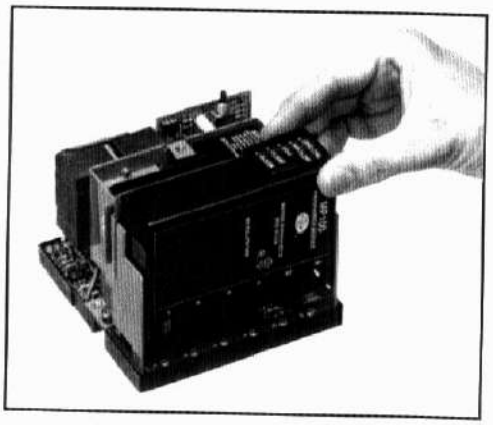

The Programmer Modules are used with the Fireye modular M-Series II Chassis (P/N MC120, MC120E, MC120P, MC120R and MC120RE for 120VAC, MC230 and MC230R for 240 VAC). They are installed in the chassis by grabbing hold of the programmer module by the ridged finger grips on the side on the module, aligning the module with the guide slots on the opening farthest from the transformer, and inserting the module into the pin connectors.

The programmer modules are designed to fit in the proper slot only. DO NOT FORCE THEM. **Replaceable Fuse:** The programmer modules are designed with a field-replaceable fuse.

The fuse is located on the printed circuit board near the connectors. The fuse will open as a result of an overload condition on terminals 3, 4, or 5. In the event the fuse opens, remove the fuse (using a small screwdriver) and install a Fireye replacement fuse (P/N 23-176) or equivalent 2AG, 8 amp fuse (e.g. Littlefuse #225008) In programmers used with the MC230 and MC230R, use replacement fuse

P/.N 23-183 or equivalent (3.5 amp, 2AG, SLO-BLO) Littlefuse #22903.5.

APPROVALS

AGENCY APPROVALS					
	UL	CSA	FM	EN230	EN298
MP100	√	√	√	√	√
MP100E				√	√
MP101	√	√	√		
MP102				√	√
MP102E				√	√
MP230	√	√	√		
MP230H	√	√	√		
MP560	√	√	√		
MP561	√	√	√		
MP562	√	√	√		

Underwriters Laboratories Inc. Listed MCCZ File MP1537

Canadian Standards Association: Guide 300-1-0.2 Class 2642 Oil File LR 7989
Guide 140-A-2 Class 2632 Gas File LR7989

Factory Mutual
EN230 EN298

Approvals do not apply to MC230 and MC230R Chassis and associated programmers.

FIREYE®
3 Manchester Road
Derry, New Hampshire 03038 USA
www.fireye.com

C-4001
MARCH 2005
Supersedes Sept. 1998

A Kidde Company

ORDERING INFORMATION

Flame Amplifier Selection:

P/N	DESCRIPTION	USE WITH SCANNER
MAUV1	UV amplifier, 2-4 second F.F.R.T.	UV1A, UV2, UV8A, 45UV3-1050
MAUV3	UV amplifier, 3 second F.F.R.T.	UV1A, UV2, UV8A, 45UV3-1050
MAUV1T	UV amplifier, .8 second F.F.R.T.	UV1A, UV2, UV8A, 45UV3-1050
MART1	Flame rectification amplifier 2-4 second F.F.R.T.	69ND1
MART3	Flame rectification amplifier, 3 second F.F.R.T.	69ND1
MART1T	Flame rectification amplifier .8 second F.F.R.T.	69ND1

FLAME SCANNER SELECTION



UV90



45UV3-1050

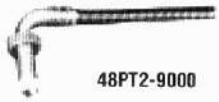

48PT2-9000



UV1A



69ND1

UV SCANNERS:	
UV1A3	1/2" NPT connector, 3 ft. (914 mm) flex. cable
UV1A6	1/2" NPT connector, 6 ft. (1828 mm) flex. cable
UV2	3/8" NPT connector, 3 ft. (914 mm) flex. cable
UV8A	1/2" NPT 90 degree angle head, 6 ft. (1828 mm) unshielded leads
UV90-3, 6, 9	90 degree lateral view, 3 ft. (914 mm), 6 ft. (1828 mm), 9 ft. (2742 mm) flex conduit
45UV3-1050	3/4" sleeve/set screw mount

FLAME DETECTORS:	
69ND1-1000K4	12 inch flame rod, 1/2" NPT connector

C-4002
NOVEMBER 1, 2005



MART1, MART3, MART1T, MAUV1, MAUV3 and MAUV1T

AMPLIFIER MODULES

APPROVALS

	AGENCY APPROVALS					
	UL	CSA	FM	AGA	EC230	EC298
MAUV1	✓	✓	✓	✓		
MAUV3					✓	✓
MAUV1T	✓	✓	✓	✓	✓	✓
MART1	✓	✓	✓	✓		
MART3					✓	✓
MART1T	✓	✓	✓	✓	✓	✓

Underwriters Laboratories Inc.: Listed Guide MCCZ — File MP 1537

Underwriters Laboratories Inc.: Recognized Components Guide MCCZ2 File MP1537

Canadian Standards Association: Guide 300-1-0.2 Class 2642 Oil File LR7989
Guide 140-A-2 Class 2632 Gas File LR 7989

American Gas Association

EN230

EN298

Factory Mutual

ANS Z21.20 Automatic Ignition Systems.

⚠ **Remove power from the control and remove the control from its wiring base before proceeding.**

INSTALLATION

The amplifier modules are used with the Fireye Modular M-SERIES II Base Chassis (P/N MC120, MC120E, MC120P, MC120R, MC120RE for 120VAC, P/N MC230, MC230R for 240VAC). They are installed in the chassis by grabbing hold of the amplifier module by the edges of its printed circuit board, aligning the module with the guide slots on the opening in the middle of the chassis, and inserting the module into the pin connectors.

The amplifier modules are designed to fit in the proper slot only. **DO NOT FORCE THEM.**

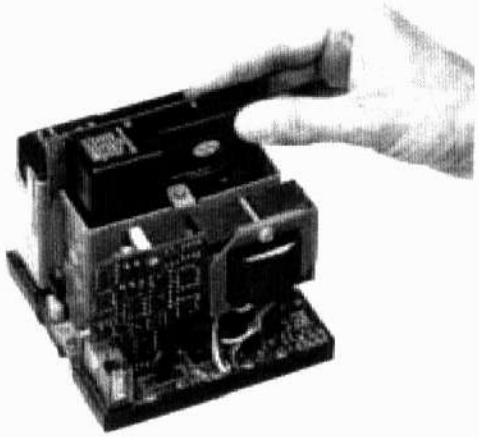

NOTICE

When Fireye products are combined with equipment manufactured by others and/or integrated into systems designed or manufactured by others, the Fireye warranty, as stated it its General Terms and Conditions of Sale, pertains only to the Fireye products and not to any other equipment or to the combined system or its overall performance.

WARRANTIES

FIREYE guarantees for *one year from the date of installation or 18 months from date of manufacture* of its products to replace, or, at its option, to repair any product or part thereof (except lamps, electronic tubes and photocells) which is found defective in material or workmanship or which otherwise fails to conform to the description of the product on the face of its sales order. **THE FOREGOING IS IN LIEU OF ALL OTHER WARRANTIES AND FIREYE MAKES NO WARRANTY OF MERCHANTABILITY OR ANY OTHER WARRANTY, EXPRESS OR IMPLIED.** Except as specifically stated in these general terms and conditions of sale, remedies with respect to any product or part number manufactured or sold by Fireye shall be limited exclusively to the right to replacement or repair as above provided. In no event shall Fireye be liable for consequential or special damages of any nature that may arise in connection with such product or part.

FIREYE®
3 Manchester Road
Derry, New Hampshire 03038 USA
www.fireye.com

C-4002
NOVEMBER 1, 2005
Supersedes Dec.1999

Before you install, operate or perform maintenance, become familiar with the following:

- NEMA Publication MG-2, Safety Standard for Construction and guide for Selection, Installation and Use of Electric Motors and Generators.
- IEC 60072-1 Electrical and IEC72-1 Mechanical specifications
- ANSI C51.5, the National Electrical Code (NEC) and local codes and practices.

Receiving Each Baldor Electric Motor is thoroughly tested at the factory and carefully packaged for shipment. When you receive your motor, there are several things you should do immediately.

1. Observe the condition of the shipping container and report any damage immediately to the commercial carrier that delivered your motor.
2. Verify that the part number of the motor you received is the same as the part number listed on your purchase order.

Handling The weight of the motor and shipping container will vary. Use correct material handling equipment to avoid injury. Use caution when removing the motor from its packaging. Sharp corners may exist on motor shaft, motor key, sheet metal and other surfaces.

Safety Notice

Only qualified personnel trained in the safe installation and operation of this equipment should install this motor. When improperly installed or used, rotating equipment can cause serious or fatal injury. Equipment must be installed in accordance with the National Electrical Code (NEC), local codes and NEMA MG2 Safety Standards for Construction and Guide for Selection, Installation and Use of Electric Motors and Generators. Observe the following guidelines:

1. Connect Power and Ground to the motor according to NEC or IEC and local codes.
2. Provide a permanent guard to prevent accidental contact of body parts or clothing with rotating or moving parts or burns if motor is hot.
3. Shaft key must be secured before starting motor.
4. Mounting bolts should be high tensile steel. Be sure to use a suitable locking device on each bolt (spring washer or thread lock compound).
5. Do not apply power to the motor until the motor is securely mounted by its mounting holes.
6. This motor must only be connected to the proper line voltage, line frequency and load size.
7. Motors are not to be used for load holding or restraining unless a properly sized brake is installed. If a motor mounted brake is installed, provide proper safeguards in case of brake failure.
8. Disconnect all power services, stop the motor and allow it to cool before servicing.
9. For single phase motors, discharge the start and/or run capacitors before servicing.
10. Do not by-pass or render inoperative any safety device.
11. DC series wound motors must be protected from sudden loss of load causing overspeed damage. DC shunt wound motors must be protected from loss of field voltage which can result in damage.
12. When using AC motors with frequency inverters, be certain that the motors Maximum Speed Rating is not exceeded.

Guarding

After motor installation is complete, a guard of suitable dimensions must be constructed and installed around the motor/gearmotor. This guard must prevent personnel from coming in contact with any moving parts of the motor or drive assembly but must allow sufficient cooling air to pass over the motor.

If a motor mounted brake is installed, provide proper safeguards for personnel in case of brake failure.

Brush inspection plates and electrical connection cover plates or lids, must be installed before operating the motor.

WARNING: Guards must be installed for rotating parts such as couplings, pulleys, external fans, and unused shaft extensions, should be permanently guarded to prevent accidental contact by personnel. Accidental contact with body parts or clothing can cause serious or fatal injury.

When this motor is installed according to these instructions, it complies with the EEC Machinery Directive. Electromagnetic Compatibility (EMC) requirements for CE compliance are met when the incoming power is purely sinusoidal. For other power source types, refer to MN1383 "Recommended Practices for Installation for EC Directive 89/336/EEC Relating to EMC".

Motor Enclosure

ODP, **Open drip proof** motors are intended for use in clean, dry locations with adequate supply of cooling air. These motors should not be used in the presence of flammable or combustible materials. Open motors can emit flame and/or molten metal in the event of insulation failure.

TEFC, **totally enclosed** motors are intended for use where moisture, dirt and/or corrosive materials are present in indoor and outdoor locations.

Explosion proof motors, as indicated by the Underwriters Laboratories, Inc. label are intended for use in hazardous areas as specified by the NEC.

Mounting

Foot mounted machines should be mounted to a rigid foundation to prevent excessive vibration. Shims may be used if location is uneven.

Flange mounted machines should be properly seated and aligned. Note: If improper rotation direction is detrimental to the load, check rotation direction prior to coupling the load to the motor shaft.

For **V-belt drive,** mount the sheave pulley close to the motor housing. Allow clearance for end to end movement of the motor shaft. Do not overtighten belts as this may cause premature bearing failure or shaft breakage.

Direct coupled machines should be carefully aligned and the shaft should rotate freely without binding.

Wiring

Connect the motor as shown in the connection diagram. If this motor is installed as part of a motor control drive system, connect and protect the motor according to the control manufacturers diagrams. Refer to MN408 for additional details on lead marking (see http://www.baldor.com/support/product_manuals.asp). The wiring, fusing and grounding must comply with the National Electrical Code or IEC and local codes. When the motor is connected to the load for proper direction of rotation and started, it should start quickly and run smoothly. If not, stop the motor immediately and determine the cause. Possible causes are: low voltage at the motor, motor connections are not correct or the load is too heavy. Check the motor current after a few minutes of operation and compare the measured current with the nameplate rating.

Grounding

Ground the motor according to NEC and local codes. In the USA consult the National Electrical Code, Article 430 for information on grounding of motors and generators, and Article 250 for general information on grounding. In making the ground connection, the installer should make certain that there is a solid and permanent metallic connection between the ground point, the motor or generator terminal housing, and the motor or generator frame. In non-USA locations consult the appropriate national or local code applicable.

Adjustment

The neutral is adjustable on some DC motors. AC motors have no adjustable parts.

Noise

For specific sound power or pressure level information, contact your local Baldor representative.

Vibration

This motor is balanced to NEMA MG1, Part 7 standard.

Brushes (DC Motors)

Periodically, the brushes should be inspected and all brush dust blown out of the motor. If a brush is worn $1/2''$ (from length specified in renewal parts data), replace the brushes. If the commutator is worn or rough, the armature should be removed. The commutator should be turned in a lathe, the mica recut and the commutator polished. Reassemble and seat the new brushes using a brush seating stone. Be sure the rocker arm is set on the neutral mark.

Lubrication Information

This is a ball or roller bearing motor. The bearings have been lubricated at the factory.
Motors that do not have regrease capability are factory lubricated for the normal life of the bearings.

Lubricant

Baldor motors are pregreased, normally with Polyrex EM (Exxon Mobil).
If other greases are preferred, check with a local Baldor Service Center for recommendations.

Relubrication Intervals (For motors with regrease capability)

New motors that have been stored for a year or more should be relubricated.
Lubrication is also recommended at these intervals:

Table 1 Relubrication Interval

NEMA (IEC) Frame Size	Rated Speed (RPM)			
	3600	1800	1200	900
Up to 210 incl. (132)	5500Hrs.	12000Hrs.	18000Hrs.	22000Hrs.
Over 210 to 280 incl. (180)	3600Hrs.	9500Hrs.	15000Hrs.	18000Hrs.
Over 280 to 320 incl. (200)	*2200Hrs.	7400Hrs.	12000Hrs.	15000Hrs.

Table 2 Service Conditions

Severity of Service	Ambient Temperature Maximum	Atmospheric Contamination	Type of Bearing
Standard	40° C	Clean, Little Corrosion	Deep Groove Ball Bearing
Severe	50° C	Moderate dirt, Corrosion	Ball Thrust, Roller
Extreme	>50° C* or Class H Insulation	Severe dirt, Abrasive dust, Corrosion	All Bearings
Low Temperature	<-30° C **		

* Special high temperature grease is recommended.

** Special low temperature grease is recommended.

Table 3 Lubrication Interval Multiplier

Severity of Service	Multiplier
Standard	1.0
Severe	0.5
Extreme	0.1
Low Temperature	1.0

Table 4 Amount of Grease to Add

Frame Size NEMA (IEC)	Bearing Description (Largest bearing in each frame size)					
	Bearing	OD D mm	Width B mm	Weight of grease to add ounce (gram)	Volume of grease to add	
					$inches^3$	teaspoon
Up to 210 incl. (132)	6307	80	21	0.30 (8.4)	0.6	2.0
Over 210 to 280 incl. (180)	6311	120	29	0.61 (17.4)	1.2	3.9
Over 280 to 320 incl. (200)	6313	140	33	0.81 (23.1)	1.5	5.2

Weight in grams = 0.005 DB

Maintenance Procedures

WARNING: Do not touch electrical connections before you first ensure that power has been disconnected. Electrical shock can cause serious or fatal injury.

WARNING: Surface temperatures of motor enclosures may reach temperatures which can cause discomfort or injury to personnel accidentally coming into contact with hot surfaces. Protection should be provided by the user to protect against accidental contact with hot surfaces. Failure to observe this precaution could result in bodily injury.

Lubrication Procedure

Caution: Keep grease clean. Mixing dissimilar grease is not recommended.

1. Relubrication with the shaft stationary and a warm motor is recommended.
2. Remove all dirt and wipe clean the outside of the grease fills and drains.
3. Clean the grease fitting (or area around grease hole, if equipped with slotted grease screws). If motor has a purge plug, remove it. Motors can be regreased while stopped (at less than 80°C) or running.
4. Locate the grease inlet at the top of the bearing hub, clean the area and replace the 1/8-inch pipe plug with a grease fitting if the motor is not equipped with grease fitting.
5. Remove grease drain plug located opposite the grease inlet.
6. Apply grease gun to fitting (or grease hole). Too much grease or injecting grease too quickly can cause premature bearing failure. Slowly apply the recommended amount of grease, taking 1 minute or so to apply.
7. Operate motor for 20 minutes, reinstall purge plug if previously removed.
8. Install grease drain plug located opposite the grease inlet.

Sample Relubrication Determination

This sample determination is based on a NEMA 286T (IEC 180) motor operating at 1750 RPM driving an exhaust fan in an ambient of 43°C atmosphere that is moderately corrosive.

1. Table 1 list 9500 hours for standard conditions.
2. Table 2 classifies severity of service as "Severe".
3. Table 3 lists a multiplier value of 0.5 for Severe conditions.
4. Table 4 shows that 1.2 in^3 or 3.9 teaspoon of grease is to be added.

Note: Smaller bearings in size category may require reduced amounts of grease.

BALDOR

World Headquarters
P.O. Box 2400 Fort Smith, AR 72902-2400 USA Ph: (1) 479.646.4711, Fax: (1) 479.648.5792
www.baldor.com

© 2009 Baldor Electric Company
All rights reserved. Printed in USA
LB5040
5/09

LEESON® OHIO GEAR

ELECTRIC MOTORS, GEARMOTORS AND DRIVES

Worm Gear Reducers Installation, Lubrication and Maintenance Instructions

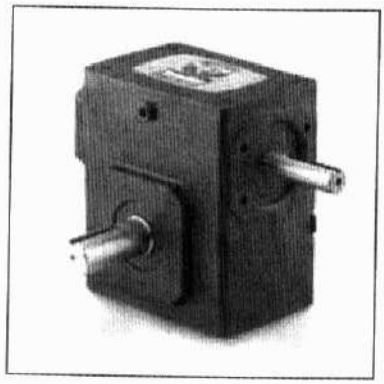

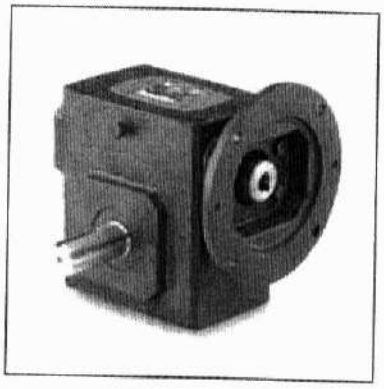

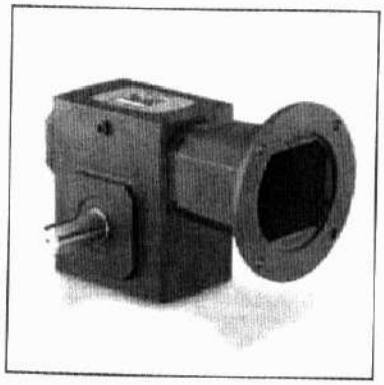

Table of Contents

WARNING/CAUTION INFORMATION 2

General Operation 3

Installation 3
- "C" Flange Adapter Kits 7

Lubrication
- Standard Units 3
- Oil Capacities 4
- Mounting Positions 5

Maintenance 5-6

Parts List 8-11

Selection Information

Read ALL instructions prior to operating reducer. Injury to personnel or reducer failure may be caused by improper installation, maintenance or operation.

Safety Alert

WARNING

- Written authorization from LEESON ELECTRIC is required to operate or use reducers in man lift or people moving devices.
- Check to make certain application does not exceed the allowable load capacities published in the current catalog.
- Buyer shall be solely responsible for determining the adequacy of the product for any and all uses to which Buyer shall apply the product. The application by Buyer shall not be subject to any implied warranty of fitness for a particular purpose.
- For safety, Buyer or User should provide protective guards over all shaft extensions and any moving apparatus mounted thereon. The User is responsible for checking all applicable safety codes in his area and providing suitable guards. Failure to do so may result in bodily injury and/or damage to equipment.
- Hot oil and reducers can cause severe burns. Use extreme care when removing lubrication plugs and vents.
- Make certain that the power supply is disconnected before attempting to service or remove any components. Lock out the power supply and tag it to prevent unexpected application of power.
- Reducers are not to be considered fail safe or self-locking devices. If these features are required, a properly sized, independent holding device should be utilized. Reducers should not be used as a brake.
- Any brakes that are used in conjunction with a reducer must be sized or positioned in such a way so as to not subject the reducer to loads beyond the catalog rating.
- Lifting supports including eyebolts are to be used for vertically lifting the gearbox only and no other associated attachments or motors.
- Use of an oil with an EP additive on units with backstops may prevent proper operation of the backstop. Injury to personnel, damage to the reducer or other equipment may result.
- Overhung loads subject shaft bearings and shafts to stress which may cause premature bearing failure and/or shaft breakage from bending fatigue, if not sized properly.

CAUTION

- Test run unit to verify operation. If the unit tested is a prototype, that unit must be of current production.
- If the speed reducer cannot be located in a clear and dry area with access to adequate cooling air supply, then precautions must be taken to avoid the ingestion of contaminants such as water and the reduction in cooling ability due to exterior contaminants.
- Mounting bolts should be routinely checked to ensure that the unit is firmly anchored for proper operation.

Important Information

In the event of the resale of any of the goods, in whatever form, Resellers/Buyers will include the following language in a conspicuous place and in a conspicuous manner in a written agreement covering such sale:

> *The manufacturer makes no warranties or representations, express or implied, by operation of law or otherwise, as to the merchantability or fitness for a particular purpose of the goods sold hereunder. Buyer acknowledges that it alone has determined that the goods purchased hereunder will suitably meet the requirements of their intended use. In no event will the manufacturer be liable for consequential, incidental or other damages. Even if the repair or replacement remedy shall be deemed to have failed of its essential purpose under Section 2-719 of the Uniform Commercial Code, the manufacturer shall have no liability to Buyer for consequential damages.*

Resellers/Buyers agree to also include this entire document including the warnings above in a conspicuous place and in a conspicuous manner in writing to instruct users on the safe usage of the product.

This instructions manual should be read together with all other printed information such as catalogs, supplied by LEESON ELECTRIC.

General Operation

1. Run the motor which drives the reducer and check the direction of reducer output rotation. Consult motor nameplate for instructions to reverse the direction of rotation.
2. Attaching the load: On direct coupled installations, check shaft and coupling alignment between speed reducer and loading mechanism. On chain/sprocket and belt/pulley installation, locate the sprocket or pulley as close to the oil seal as possible to minimize overhung load. Check to verify that the overhung load does not exceed specifications published in the catalog.
3. High momentum loads: If coasting to a stop is undesirable, a braking mechanism should be provided to the speed reducer output shaft or the driven mechanism.

CAUTION The system of connected rotating parts must be free from critical speed, torsional or other type vibration, no matter how induced. The responsibility for this system analysis lies with the purchaser of the speed reducer.

Installation

1. Mount the unit to a rigid flat surface using grade 5 or higher fasteners. The mounting fasteners should be the largest standard size that will fit in the base mounting hole. Shim as required under flange or base feet which do not lie flat against the mounting surface.
2. For shipment, pipe plugs are installed in the unit and a vent plug is packed separately. After mounting the unit in position, remove the appropriate pipe plug and install the vent plug in the location shown on page 5. On double reduction units both the primary and the secondary must be vented. Failure to vent the unit can cause premature seal wear or loss of seal and oil. These conditions are not covered by warranty. Check for correct oil level. Contact the factory for level and vent recommendations on non-standard mounting positions. **WASHGUARD® (BISSC)** and **ALL-STAINLESS STEEL** reducers are factory supplied with an Enviro-Seal and do not use vents. See (Enviro-Seal) under **Lubrication** for further information.
3. **WASHGUARD® (BISSC)** and **ALL-STAINLESS STEEL** reducers include synthetic oil and an Enviro-Seal pre-installed at the factory. It is not necessary to vent these units, and they can be used as supplied from the factory. Do not loosen the nut holding the stem of the Enviro-Seal, and do not block the hole in the stem. Do not blow pressurized air into the hole, and avoid spraying washdown chemicals directly into the hole.
4. Connect motor to speed reducer.

WARNING Depending upon gear geometry and operating conditions worm gear reducers may or may not backdrive. Special consideration should be given to high inertia loads connected to the output shaft. Consult the factory for further details.

CAUTION DO NOT CHANGE MOUNTING POSITIONS WITHOUT CONTACTING FACTORY.
Altering the mounting position may require special lubrication provisions which must be factory installed.

CAUTION Do not operate the reducer without making sure it contains the correct amount of oil. Do not overfill or underfill with oil, or injury to personnel, reducer or other equipment may result. **WASHGUARD®** and **ALL-STAINLESS STEEL** reducers are lubed and sealed for life, so in most applications it will not be necessary to drain or re-fill the unit.

CAUTION A unit cannot be used as an integral part of a machine superstructure which would impose additional loads on the unit other than those imposed by the torque being transmitted either through a shaft-mounted arrangement, and any shaft mounted power transmitting device. *(e.g., sprockets, pulleys, couplings)*

CAUTION For safe operation and to maintain the unit warranty, when changing a factory installed fastener for any reason, it becomes the responsibility of the person making the change to properly account for fastener grade, thread engagement, load, tightening torque and the means of torque retention.

Lubrication - Standard Units

With the exception of reducer sizes 870, 880 and 8100 (shipped dry), all standard worm reducers ordered from the factory are filled with synthetic lubricant to operate within a -10° to105° F ambient temperature range. Double reduction units have separate oil sumps and must be filled/checked independently. Prior to startup, verify that the oil is at the level shown on the drawings on page 5. If the ambient temperature will be outside of this range, drain and refill reducer with lubricant of proper viscosity prior to use.

Enviro-Seal: WASHGUARD® (BISSC) and **ALL-STAINLESS STEEL** reducers come standard with an Enviro-Seal and synthetic oil pre-installed at the factory. It is not necessary to vent these reducers, and they can be used as supplied from the factory.

CAUTION In the Food and Drug Industry (including animal food), consult the lubrication supplier for recommendation of lubricants which are acceptable to the Food and Drug Administration and/or other authoritative bodies having jurisdiction.

CAUTION Do not mix different oils in the reducer. Oils should be compatible with Viton® seal material.

Lubrication

The reducer is properly filled at the factory with sufficient lubricant per customer specified mounting position. If position is not specified by customer, reducer will be filled to level in mounting position 1 (worm over) Reducer ordered with a "MOD" will be filled based on the factory assumed mounting position, mounting position should be specified with order to assure proper lubrication.

Factory Assumed Mounting Orientation	Applicable Unit Styles*	
Worm Over	B, T, F, H, FH, C D, DT, DF, DH, DFH DX, DXT, DXH, DXFH	Single Reduction Double Reduction Worm-Worm Double Reduction Helical-Worm
Worm Under	U DU	Single Reduction Double Reduction Worm-Worm
Vertical Output	VL, VH DVL, DVH DXVL, DXVH	Single Reduction Double Reduction Worm-Worm Double Reduction Helical-Worm
Vertical Input	J DJ DXJ	Single Reduction Double Reduction Worm-Worm Double Reduction Helical-Worm

* INCLUDES MOTORIZED COUPLING AND QUILL INPUT VERSIONS OF ALL STYLES LISTED

All standard IRONMAN® BY OHIO GEAR Worm Reducers are factory filled with MOBIL SHC-634 lubricant, a synthesized hydrocarbon formulated for long life and wide operating temperature range (-25°F to +220°F).
Change intervals: Standard compounded lubricants (non-synthetic) should be changed every six months or 2500 operating hours, whichever comes first. Factory installed synthetic lubricants should be changed only when performing maintenance that requires gearbox disassembly.

If oil must be replaced in IRONMAN® BY OHIO GEAR Worm Reducers, use only MOBIL SHC-634.

Do not confuse MOBIL SHC-634 with MOBILGEAR 634. MOBILGEAR 634 is an EP type gear oil NOT suitable for use in the IRONMAN® BY OHIO GEAR worm gear reducers.

SPECIAL LUBRICATION REQUIREMENTS - Size 830 & Larger
Please specify mounting position *with order* if any of the following applies:
1- Reducer is mounted with input or output shafts vertical
2- Input speed is less than 900 RPM
3- Reducer is mounted in inclined position
NOTE: The reducer may require modifications to assure proper lubrication in these applications.

For lubrication requirements of helical reducers (primaries of helical/worm reducers and ratio multipliers), refer to ratio multiplier maintenance manual or contact LEESON Electric.

Oil Capacities (ounces) - Standard Units

Mounting Position	UNIT SIZE													
	813	815	818	821	824	826	830	832	842	852	860	870*	880*	8100*
1-Worm Over	4	12	12	20	24	40	56	72	112	188	312	560	768	1152
2-Worm Under	8	16	20	28	40	60	84	108	152	304	328	524	820	1280
3-Vertical Output	4	16	16	28	32	48	68	88	128	248	320	332	460	640
4-Vertical Input	4	16	16	24	32	48	72	92	128	248	325	584	800	1200
5-Worm Over on Secondary Unit of Double Reduction	—	—	—	N/A	N/A	N/A	N/A	192	308	320	485	805	1144	1716

* Shipped dry

16 OZ.	=	1 PINT
2 PINTS	=	1 QUART
4 QUARTS	=	1 GALLON
1 GALLON	=	128 OZ.

CAUTION Always check for proper oil level after filling. Capacities vary somewhat with model and mounting position. Oil should rise to bottom edge of level hole. Do not overfill.

Standard Speed Reducer Mounting Positions & Vent Plug, Level and Drain Locations

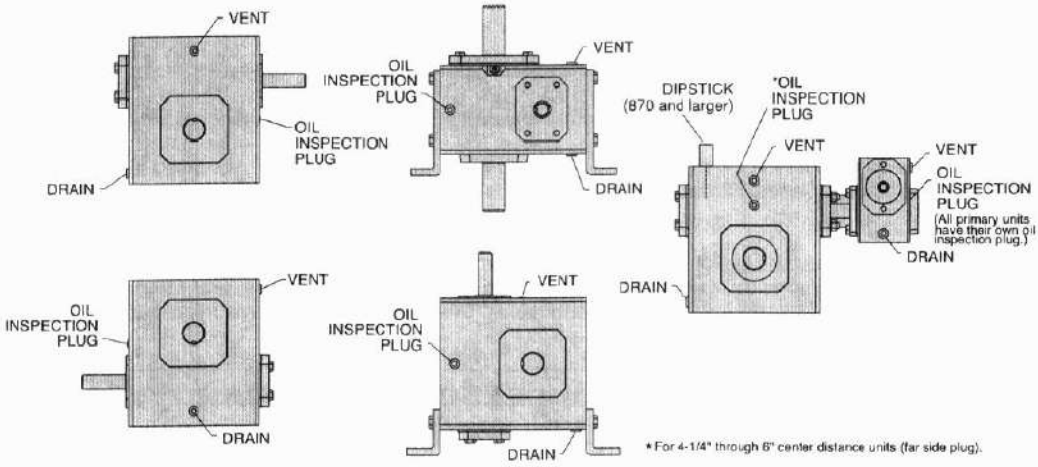

Maintenance · Standard Units

Your IRONMAN® BY OHIO GEAR reducer has been tested and adjusted at the factory. Dismantling or replacement of components must be done by LEESON to maintain the warranty.

Inspect vent plug or stem of the Environ-Seal (if equipped) often to insure it is clean and operating.

⚠CAUTION Mounting bolts should be routinely checked to ensure that the unit is firmly anchored for proper operation.

Seals: The IRONMAN® BY OHIO GEAR line of speed reducers utilize premium quality seals which are the state-of-the-art in sealing technology. Seals are, however, a wear item and eventually need to be replaced. Replacement can be easily accomplished by following the steps below:

1. Remove the worn seal without damaging the shaft surface or the seal bore. This can be done by drilling a .062" diameter hole in the seal casing (being careful not to drill into the bearing behind the seal). Screw a #10 sheet metal screw into the hole and pry out the seal.
2. Clean the seal bore of sealant.
3. Before installing the new seal, use electrical tape to cover any keyways on the shaft to prevent seal lip damage.
4. Grease the seal lips with bearing grease and apply a sealant to the seal bore.
5. Slide the seal over the shaft being careful not to fold the inner lip over on any shaft steps.
6. Press the seal into its bore with a sleeve that presses on the seal casing, being careful to keep the seal square in its bore.

If seal leakage has resulted in the loss of a significant amount of oil, it may be necessary to add more lubricant. For normal ambient temperature conditions, LEESON recommends Mobil SHC 634 synthetic gear oil for worm drives, and MOBILGEAR 629 (non-synthetic) oil for helical drives.

⚠CAUTION Always check for proper oil level after filling. Do not overfill or underfill with oil, or injury to personnel, reducer, or other equipment may result.

⚠CAUTION Do not mix different oils in the reducer. Oils should be compatible with Viton® seal material.

Maintenance - WASHGUARD® and ALL-STAINLESS STEEL Reducers

Your **LEESON WASHGUARD®** and **ALL-STAINLESS STEEL** reducer has been tested and adjusted at the Factory. Dismantling or replacement of components must be done by LEESON to maintain the warranty.

Inspect the stem of the Enviro-Seal often to ensure it is clean and operating properly.

⚠CAUTION Mounting bolts should be routinely checked to ensure that the unit is firmly anchored for proper operation.

Seals: The LEESON line of speed reducers utilize premium quality seals which are state-of-the-art in sealing technology. Seals are, however, a wear item and eventually need to be replaced. Replacement can easily be accomplished by following the procedure given under Maintenance - Standard Units on page 5.

If seal leakage has resulted in the loss of a significant amount of oil, it may be necessary to add more lubricant. For normal ambient temperature conditions, LEESON recommends Mobil SHC 634 synthetic gear oil for worm drives, and Mobil SHC 150 (synthetic) for helical drives. For all **WASHGUARD®** and **ALL-STAINLESS STEEL** worm drives, fill the gearbox to the level indicated in the diagram below.

Standard Oil Level for LEESON WASHGUARD® and ALL-STAINLESS STEEL Reducers

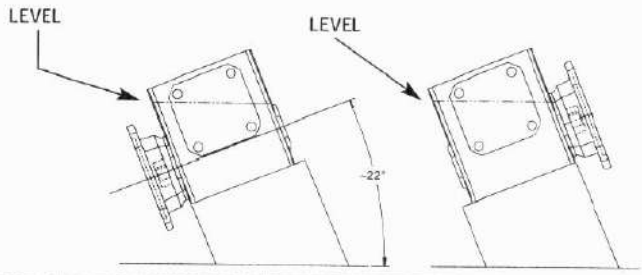

⚠CAUTION Always check for proper oil level after filling. Do not overfill or underfill with oil, or injury to personnel, reducer, or other equipment may result.

⚠CAUTION Do not mix different oils in the reducer. Oils should be compatible with Viton® seal material.

Installation of "C" Flange Adapter Kits With Flexible Couplings (BM Style)

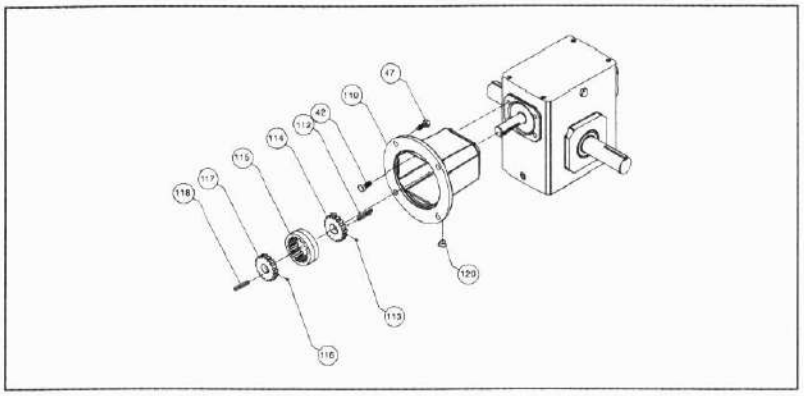

These instructions must be followed for proper installation of "C" Flange Adapter and Motor onto IRONMAN® BY OHIO GEAR Worm Reducers. These reducers have input ball bearings mounted directly in the housing, and no bearing cap on the input shaft side.

1. Make sure reducer pilot and face, and flange pilot and face are clean.
2. Install "C" Flange Adapter (ref. 110) onto reducer, being careful not to damage seal.
3. Install capscrews (ref. 42) and tighten to torque specified in tightening torque chart on page 6.
4. Install key (ref. 112) in the input shaft, key should be flush with shaft end. Install coupling hub (ref. 114) flush with end of reducer shaft.
5. Rotate input shaft of reducer to position the set screw (ref. 113) in line with access hole provided in the "C" flange adapter, tighten set screw (make sure key is properly in place under set screw).
6. Slide plastic sleeve (ref. 115) over reducer hub until it comes to a stop.
7. **Discard motor key** and install key supplied in kit (ref. 118) flush with motor shaft end. Install coupling hub (ref. 117) flush with end of motor shaft and tighten set screw (ref. 116), make sure key is under set screw.
8. Install motor by sliding hub into sleeve until it comes to a stop. Install capscrews (ref. 47) and tighten to torque specified on tightening torque chart.
9. **Install plastic plug (ref. 120) into the "C" Flange Adapter access hole.**

Items Included in "C" Flange Adapter Kit

1. One "C" Flange Adapter (ref. 110)
2. Four capscrews (ref. 42) adapter to reducer
3. One reducer coupling hub (ref. 114)
4. One reducer input key (ref. 112)
5. One reducer hub set screw (ref. 113)
6. Four capscrews (ref. 47), motor to adapter
7. One coupling sleeve (ref. 115)
8. One motor coupling hub (ref. 117)
9. One motor shaft key (ref. 118)
10. One motor hub set screw (ref. 116)
11. One access hole plug (ref. 120)

Capscrew Tightening Torque
Grade 5 Capscrews (dry, without lubricant)

Capscrew Size	Tightening Torque (lb.-in.)
1/4 UNC	75
5/16 UNC	155
3/8 UNC	275
1/2 UNC	780

Parts List

LEESON
OHIO GEAR

MODEL B813-B860
(Basic Unit Components)
SINGLE REDUCTION

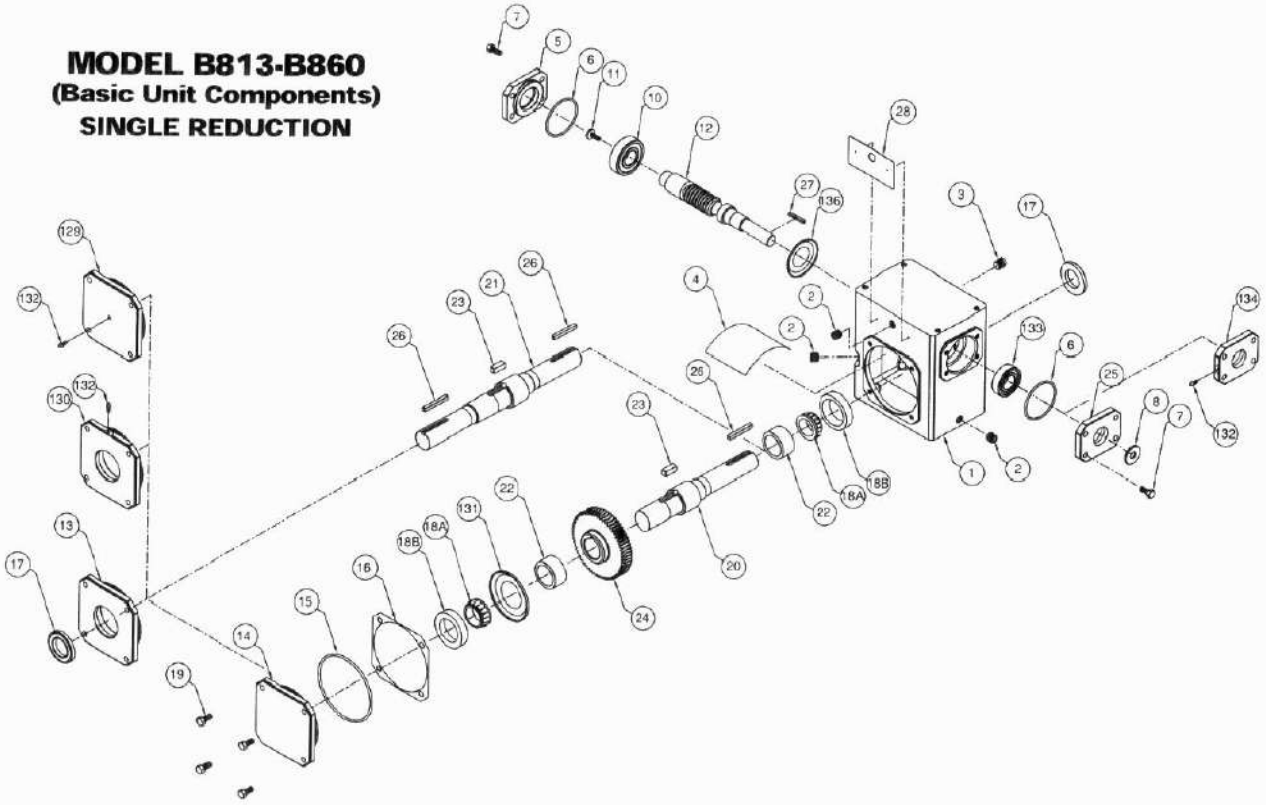

BASIC SINGLE REDUCTION UNIT (B-STYLE)

ITEM # DESCRIPTION

1 HOUSING
2 PIPE PLUG
3 VENT PLUG
4 SPLASH GUARD
5 INPUT CAP
6 O-RING
7 HEX HEAD CAP SCREW
8 INPUT OIL SEAL
9 INPUT BEARING (cup and cone for 842 and larger units)
10 INPUT BEARING (cup and cone for 842 and larger units)
■11 RETAINING SCREW
12 INPUT WORM SHAFT
13 OUTPUT COVER - OPEN
14 OUTPUT COVER - CLOSED
15 O-RING
16 OUTPUT COVER SHIM (as required)
17 OUTPUT OIL SEAL
18 OUTPUT BEARING (18A. CONE, 18B. CUP)
19 HEX HEAD CAP SCREW
♣20 OUTPUT SHAFT - SINGLE
♣21 OUTPUT SHAFT - DOUBLE
22 GEAR SPACER
23 GEAR KEY (only used on size 826 and larger units)
♣24 OUTPUT GEAR
*25 INPUT COVER
26 KEY - OUTPUT EXTENSION
27 KEY - INPUT EXTENSION
28 NAMEPLATE

QUILL MOTOR FLANGE UNIT (BMQ-STYLE)

40 QUILL MOTOR FLANGE
41 INPUT OIL SEAL
42 HEX HEAD CAP SCREW (flange to housing)
43 RETAINING RING - SHAFT
*44 RETAINING RING - HOUSING
45 QUILL INPUT SHAFT
46 KEY - INPUT
47 HEX HEAD CAP SCREW (motor to flange)

HOLLOW OUTPUT SHAFT UNIT (H-STYLE)

51 OUTPUT COVER
52 OUTPUT OIL SEAL
53 OUTPUT BEARING (53A. CONE, 53B. CUP)
54 GEAR SPACER
♣55 OUTPUT SHAFT
56 SETSCREW
57 GEAR KEY (only used on size 826 and larger units)
♣58 OUTPUT GEAR
59 OUTPUT KEY

LONG MOTOR FLANGE AND COUPLING KIT (BM-STYLE)

110 "C" FACE MOTOR FLANGE
111 HEX HEAD CAP SCREW (flange to housing)
112 COUPLING KEY - REDUCER SHAFT
113 SETSCREW - REDUCER SHAFT
114 COUPLING GEAR - REDUCER SHAFT
115 COUPLING SLEEVE
116 SETSCREW - MOTOR SHAFT
117 COUPLING GEAR - MOTOR SHAFT
118 COUPLING KEY - MOTOR SHAFT
119 HEX HEAD CAP SCREW
(motor to flange)
120 PLASTIC PLUG

VERTICAL SHAFT REQUIRED PARTS
(supplied only when mounting position involves a vertical shaft)

*129 OUTPUT COVER - CLOSED
*130 OUTPUT COVER - OPEN
*131 OUTPUT BEARING GREASE RETAINER
132 GREASE FITTING
133 SEALED BALL BEARING (only used on size 818 thru 826 units)
♦134 INPUT COVER
♦136 INPUT BEARING GREASE RETAINER

* ONLY USED ON SIZE 842 AND LARGER UNITS
♦ ONLY USED ON SIZE 830 AND LARGER UNITS
♣ SUPPLIED ONLY AS OUTPUT ASSEMBLY ON 813 THROUGH 824 UNITS
■ ONLY USED ON SIZES 813 - 832

Parts List

LEESON
OHIO GEAR

MODEL B813-B860
(Basic Unit Components)
SINGLE REDUCTION

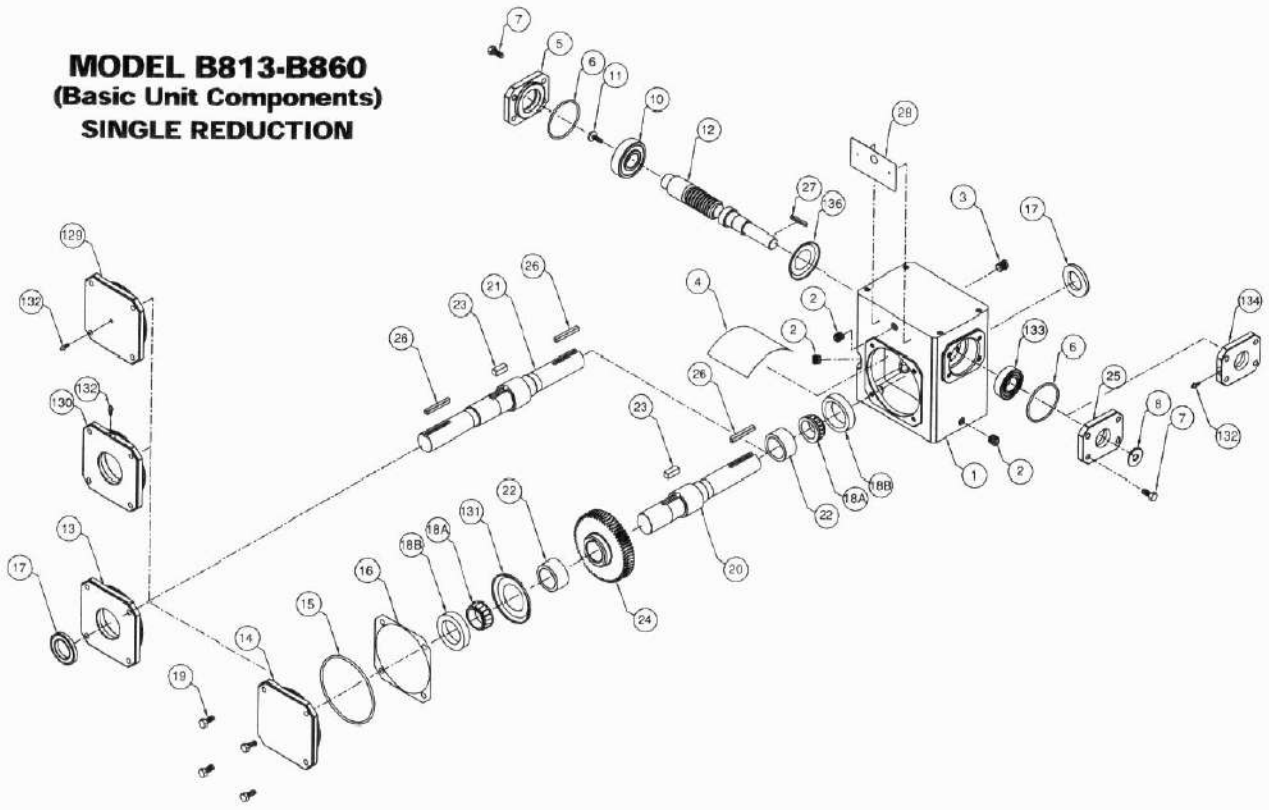

BASIC SINGLE REDUCTION UNIT (B-STYLE)

ITEM # DESCRIPTION

1 HOUSING
2 PIPE PLUG
3 VENT PLUG
4 SPLASH GUARD
5 INPUT CAP
6 O-RING
7 HEX HEAD CAP SCREW
8 INPUT OIL SEAL
9 INPUT BEARING (cup and cone for 842 and larger units)
10 INPUT BEARING (cup and cone for 842 and larger units)
■11 RETAINING SCREW
12 INPUT WORM SHAFT
13 OUTPUT COVER - OPEN
14 OUTPUT COVER - CLOSED
15 O-RING
16 OUTPUT COVER SHIM (as required)
17 OUTPUT OIL SEAL
18 OUTPUT BEARING (18A. CONE, 18B. CUP)
19 HEX HEAD CAP SCREW
♣20 OUTPUT SHAFT - SINGLE
♣21 OUTPUT SHAFT - DOUBLE
22 GEAR SPACER
23 GEAR KEY (only used on size 826 and larger units)
♣24 OUTPUT GEAR
*25 INPUT COVER
26 KEY - OUTPUT EXTENSION
27 KEY - INPUT EXTENSION
28 NAMEPLATE

QUILL MOTOR FLANGE UNIT (BMQ-STYLE)

40 QUILL MOTOR FLANGE
41 INPUT OIL SEAL
42 HEX HEAD CAP SCREW (flange to housing)
43 RETAINING RING - SHAFT
*44 RETAINING RING - HOUSING
45 QUILL INPUT SHAFT
46 KEY - INPUT
47 HEX HEAD CAP SCREW (motor to flange)

HOLLOW OUTPUT SHAFT UNIT (H-STYLE)

51 OUTPUT COVER
52 OUTPUT OIL SEAL
53 OUTPUT BEARING (53A. CONE, 53B. CUP)
54 GEAR SPACER
♣55 OUTPUT SHAFT
56 SETSCREW
57 GEAR KEY (only used on size 826 and larger units)
♣58 OUTPUT GEAR
59 OUTPUT KEY

LONG MOTOR FLANGE AND COUPLING KIT (BM-STYLE)

110 "C" FACE MOTOR FLANGE
111 HEX HEAD CAP SCREW (flange to housing)
112 COUPLING KEY - REDUCER SHAFT
113 SETSCREW - REDUCER SHAFT
114 COUPLING GEAR - REDUCER SHAFT
115 COUPLING SLEEVE
116 SETSCREW - MOTOR SHAFT
117 COUPLING GEAR - MOTOR SHAFT
118 COUPLING KEY - MOTOR SHAFT
119 HEX HEAD CAP SCREW (motor to flange)
120 PLASTIC PLUG

VERTICAL SHAFT REQUIRED PARTS
(supplied only when mounting position involves a vertical shaft)

*129 OUTPUT COVER - CLOSED
*130 OUTPUT COVER - OPEN
*131 OUTPUT BEARING GREASE RETAINER
132 GREASE FITTING
133 SEALED BALL BEARING (only used on size 818 thru 826 units)
♦134 INPUT COVER
♦136 INPUT BEARING GREASE RETAINER

* ONLY USED ON SIZE 842 AND LARGER UNITS
♦ ONLY USED ON SIZE 830 AND LARGER UNITS
♣ SUPPLIED ONLY AS OUTPUT ASSEMBLY ON 813 THROUGH 824 UNITS
■ ONLY USED ON SIZES 813 - 832

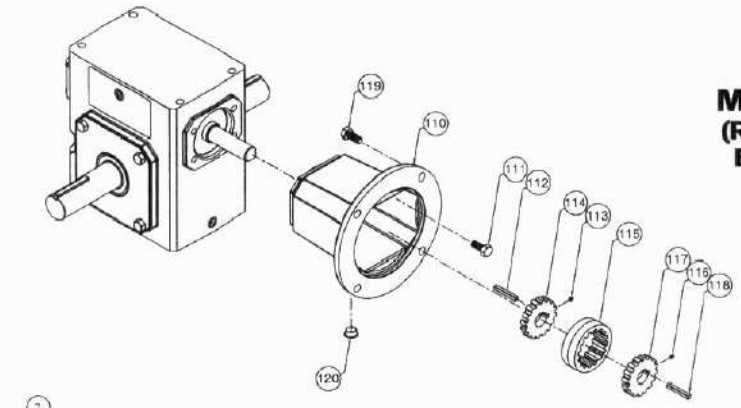

MODEL BM813-BM860
(Refer to Single Reduction Basic Unit Components)

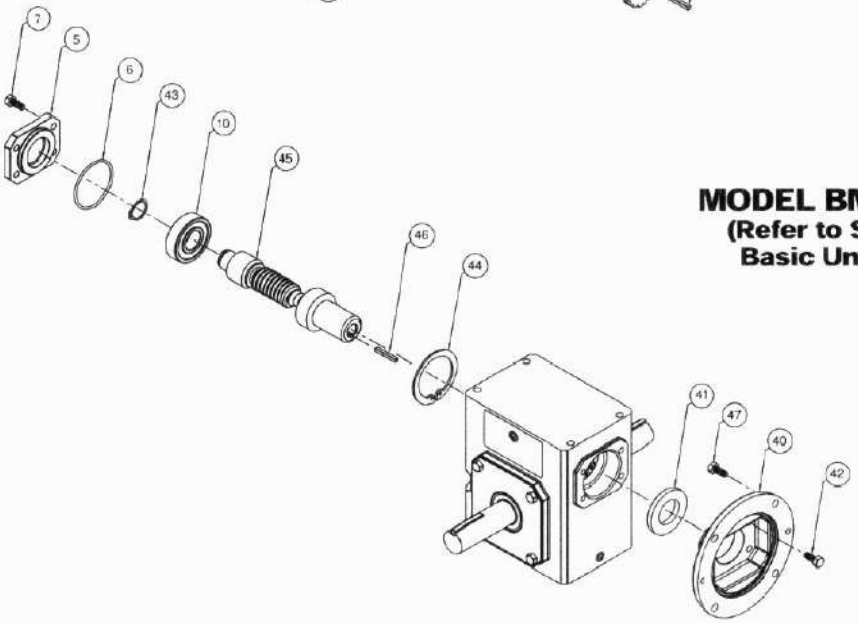

MODEL BMQ813-BMQ860
(Refer to Single Reduction Basic Unit Components)

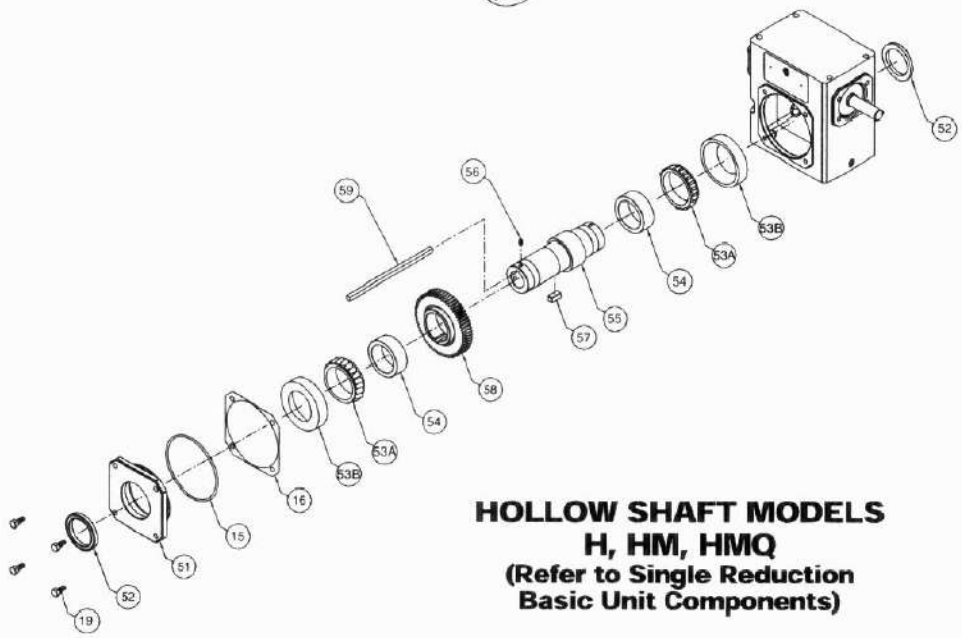

HOLLOW SHAFT MODELS
H, HM, HMQ
(Refer to Single Reduction Basic Unit Components)

Parts List

LEESON
OHIO GEAR

MODEL D813-D860
(Basic Unit Components)
DOUBLE REDUCTION

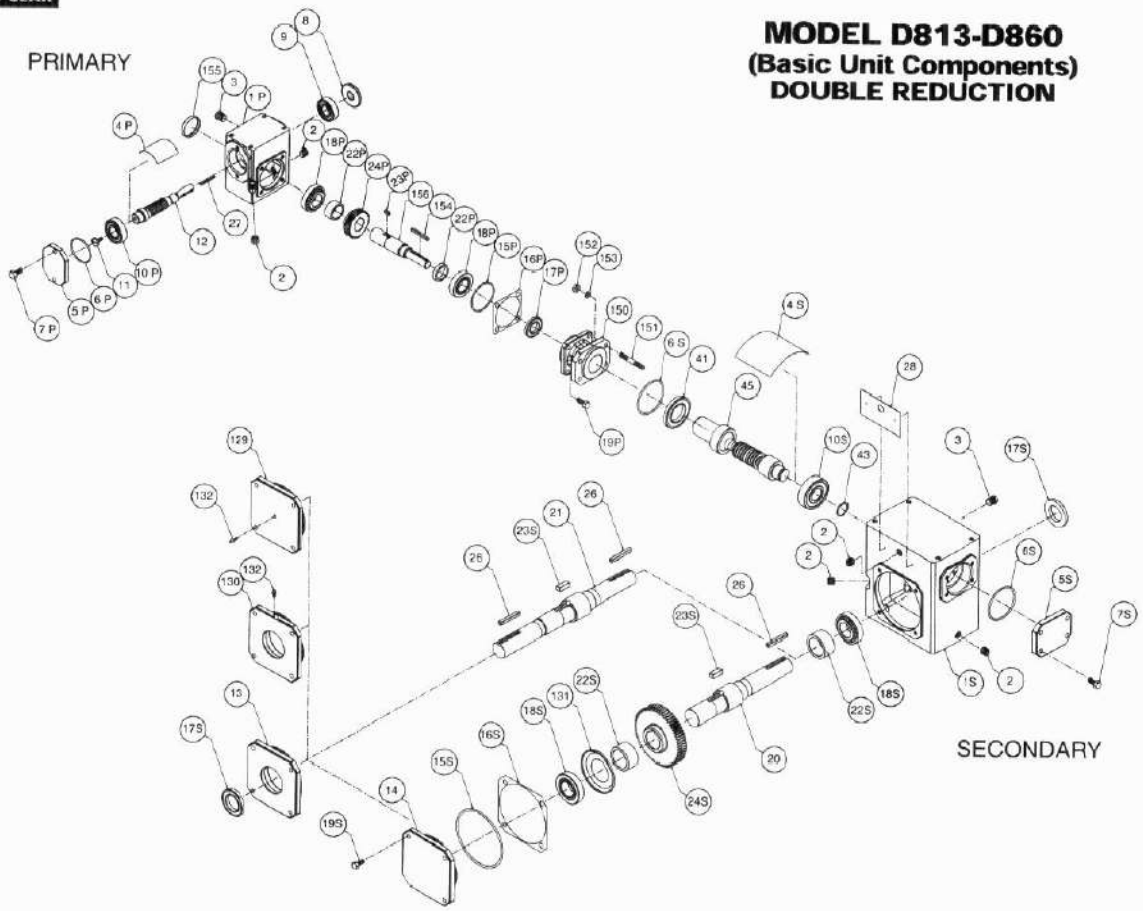

DOUBLE REDUCTION UNIT (D-STYLE)

ITEM # DESCRIPTION

1 HOUSING
2 PIPE PLUG
3 VENT PLUG
4 SPLASH GUARD
5 INPUT CAP
6 O-RING
7 HEX HEAD CAP SCREW
8 INPUT OIL SEAL
9 INPUT BEARING (cup and cone for 842 and larger units)
10 INPUT BEARING (cup and cone for 842 and larger units)
■11 RETAINING SCREW
12 INPUT WORM SHAFT
13 OUTPUT COVER - OPEN
14 OUTPUT COVER - CLOSED
15 O-RING
16 OUTPUT COVER SHIM (as required)
17 OUTPUT OIL SEAL
18 OUTPUT BEARING (18A. CONE, 18B. CUP)
19 HEX HEAD CAP SCREW
♣20 OUTPUT SHAFT - SINGLE
♣21 OUTPUT SHAFT - DOUBLE
22 GEAR SPACER
23 GEAR KEY (only used on size 826 and larger units)
♣24 OUTPUT GEAR
26 KEY - OUTPUT EXTENSION
27 KEY - INPUT EXTENSION
28 NAMEPLATE
41 INPUT OIL SEAL
43 RETAINING RING - SHAFT
45 QUILL INPUT SHAFT
150 DOUBLE REDUCTION ADAPTER
151 STUD
152 HEX NUT
153 LOCK WASHER
154 PRIMARY SOLID OUTPUT KEY
155 EXPANSION PLUG
156 PRIMARY SOLID OUTPUT SHAFT

QUILL MOTOR FLANGE UNIT (DMQ-STYLE)

40 QUILL MOTOR FLANGE
41 INPUT OIL SEAL
42 HEX HEAD CAP SCREW (flange to housing)
43 RETAINING RING - SHAFT
*44 RETAINING RING - HOUSING
45 QUILL INPUT SHAFT
46 KEY - INPUT
47 HEX HEAD CAP SCREW (motor to flange)

HOLLOW OUTPUT SHAFT UNIT (H-STYLE)

51 OUTPUT COVER
52 OUTPUT OIL SEAL
53 OUTPUT BEARING (53A. CONE, 53B. CUP)
54 GEAR SPACER
♣55 OUTPUT SHAFT
56 SETSCREW
57 GEAR KEY (only used on size 826 and larger units)
♣58 OUTPUT GEAR
59 OUTPUT KEY

LONG MOTOR FLANGE AND COUPLING KIT (BM-STYLE)

110 "C" FACE MOTOR FLANGE
42 HEX HEAD CAP SCREW (flange to housing)
112 COUPLING KEY - REDUCER SHAFT
113 SETSCREW - REDUCER SHAFT
114 COUPLING GEAR - REDUCER SHAFT
115 COUPLING SLEEVE
116 SETSCREW - MOTOR SHAFT
117 COUPLING GEAR - MOTOR SHAFT
118 COUPLING KEY - MOTOR SHAFT
47 HEX HEAD CAP SCREW (motor to flange)
120 PLASTIC PLUG

VERTICAL SHAFT REQUIRED PARTS

(supplied only when mounting position involves a vertical shaft)

*129 OUTPUT COVER - CLOSED
*130 OUTPUT COVER - OPEN
*131 OUTPUT BEARING GREASE RETAINER
132 GREASE FITTING
133 SEALED BALL BEARING (only used on size 818 thru 826 units)
♦134 INPUT COVER
♦136 INPUT BEARING GREASE RETAINER

* ONLY USED ON SIZE 842 AND LARGER UNITS
♦ ONLY USED ON SIZE 830 AND LARGER UNITS
♣ SUPPLIED ONLY AS OUTPUT ASSEMBLY ON 813 THROUGH 824 UNITS
■ ONLY USED ON SIZES 813 - 832

P - PRIMARY
S - SECONDARY

LEESON
OHIO GEAR

Parts List

IRONMAN BY OHIO GEAR

MODEL DM813-DM860
(Refer to Double Reduction Basic Unit Components)

MODEL DMQ813-DMQ852
(Refer to Double Reduction Basic Unit Components)

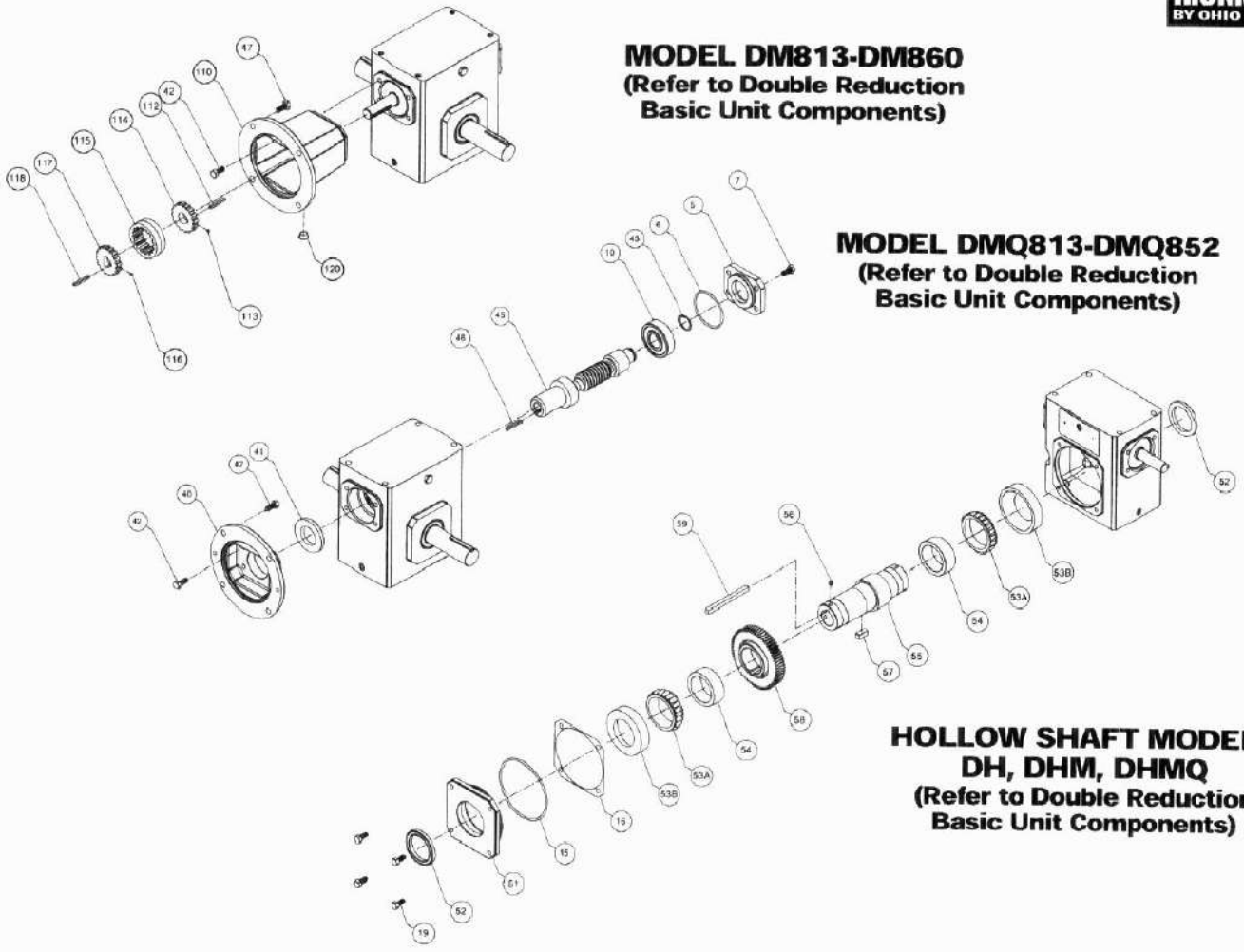

HOLLOW SHAFT MODELS DH, DHM, DHMQ
(Refer to Double Reduction Basic Unit Components)

STEEL MOUNTING ACCESSORIES

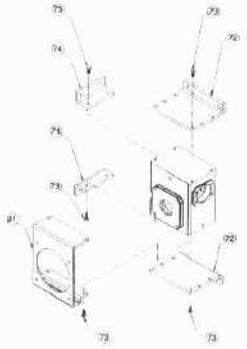

CAST MOUNTING ACCESSORIES

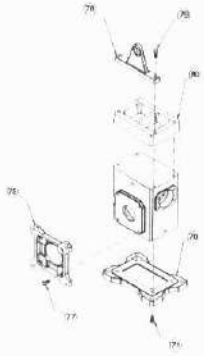

MOUNTING BRACKET OPTIONS	
70	HORIZONTAL MOUNTING BASE
71	CAP SCREW
72	HIGH AND LOW V-BRACKETS
73	HEX HEAD CAP SCREW
74	"J" MOUNT BRACKET
75	"F" OUTPUT FLANGE (CAST)
77	HEX HEAD CAP SCREW
78	TORQUE BRACKET
79	HEX HEAD CAP SCREW
80	RISER BLOCK
81	"FB" OUTPUT FLANGE (bent steel - only available thru size 826, excluding 815 units)

ENVIRO-SEAL

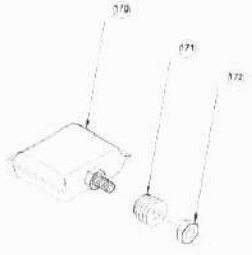

ENVIRO-SEAL ASSEMBLY	
170	ENVIRO-SEAL CHAMBER
171	ENVIRO-SEAL STEM PLUG
172	ENVIRO-SEAL STEM NUT

Parts List
Ratio Multipliers

LEESON
OHIO GEAR

TXMQ

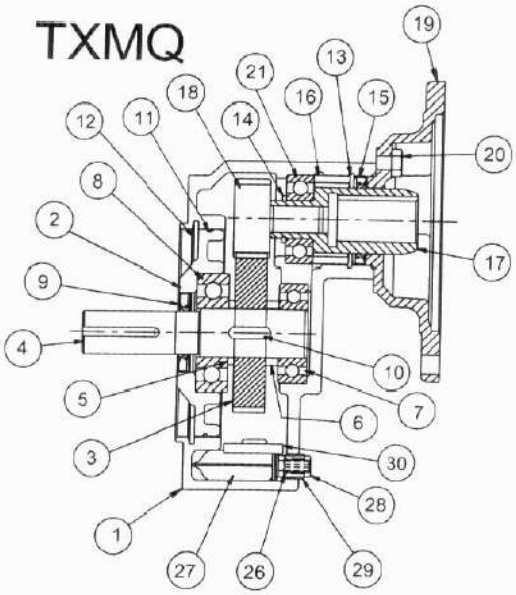

TXM

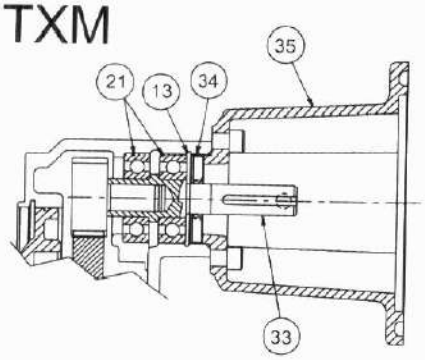

TX

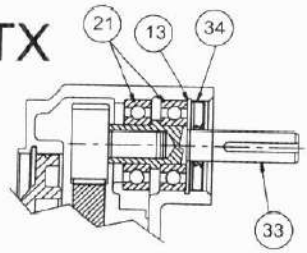

TXMQ 1, 2 & 3 PARTS LIST:

ITEM #	DESCRIPTION
1	HOUSING
2	COVER, OUTPUT
3	GEAR, OUTPUT
4	OUTPUT SHAFT
5	SPACER, OUTPUT
6	SPACER, OUTPUT
7	BEARING, OUTPUT
8	BEARING, OUTPUT
9	SEAL, OUTPUT
10	KEY, OUTPUT
11	"O" RING, OUTPUT
12	SNAP RING, OUTPUT
13	SNAP RING, INPUT
14	SNAP RING, INPUT
15	SEAL, INPUT
16	SPACER, INPUT
17	QUILL, COUPLING
18	PINION, INPUT

ITEM #	DESCRIPTION
19	FLANGE, QUILL INPUT
20	BOLT, INPUT
21	BEARING, INPUT
26	"O" RING, INT. PRES. COMP.
27	INT. PRES. COMPENSATION
28	NUT, INT. PRES. COMP.
29	PLUG, STEM
30	SPLASH GUARD

WASHGUARD styles only.

TX & TXM (2 & 3) PARTS LIST
(SOLID INPUT)

ITEM #	DESCRIPTION
33	SHAFT, INPUT
34	SEAL, INPUT
35	FLANGE, MOTOR (TXM ONLY)

Class of Service

All capacity ratings are based on proper application of American Gear Manufacturers Association (AGMA) service factors as given on page 174 of the IRONMAN® BY OHIO GEAR 8050 Catalog. Load conditions must be within cataloged ratings published in the current LEESON Catalog (available upon request).

Warranty From LEESON Electric - See 8050 catalog pages 185-187 for warranty terms and conditions.

IRONMAN® is a registered mark of World Triathlon Corporation used under license.

LEESON ELECTRIC
A REGAL-BELOIT COMPANY
GRAFTON, WISCONSIN 53024-0241 U.S.A.
TEL (262)377-8810 FAX (262)377-9025 www.leeson.com

© LEESON ELECTRIC, 2006

REV3 5285S/20K/3-06/TP/BH

SUNFLOWER DRYING RECOMMENDATIONS FOR DELUX GRAIN DRYERS

THE FOLLOWING INFORMATION CONCERNS THE DRYING OF SUNFLOWERS IN DELUX DRYERS. THIS MATERIAL HAS BEEN SPECIALLY PREPARED TO ASSIST THE OPERATOR IN THE **SAFE AND EFFECTIVE** OPERATION OF THE DRYER FOR THIS PURPOSE.

IT IS VERY IMPORTANT TO COMPLETELY READ AND UNDERSTAND THESE RECOMMENDATIONS AND PRECAUTIONS PRIOR TO ATTEMPTING TO DRY SUNFLOWERS !!!

SUNFLOWER DRYING PRECAUTIONS

1. REFER TO YOUR SERVICE MANUAL FOR SUGGESTED DRYING TEMPERATURE SETTINGS.

2. **CLEAN SUNFLOWERS PRIOR TO DRYING.**

3. HARVEST WHEN SEEDS ARE BELOW 20% MOISTURE CONTENT. MOISTURE ABOVE 20% ADVERSELY AFFECTS THE FLOW CHARACTERISTICS OF THE SUNFLOWER SEEDS.

4. **NEVER LEAVE DRYER UNATTENDED WHILE DRYING SUNFLOWERS.**

5. ALL DELUX DRYERS ARE EQUIPPED WITH METER ROLL UNLOADING SYSTEMS AND SHOULD BE CHECKED FOR UNIFORM GRAIN MOVEMENT BY OBSERVING DOWNWARD MOVEMENT OF SUNFLOWERS IN THE GRAIN COLUMNS AND BY OCCASIONALLY STOPPING THE LOAD OPERATION TO OBSERVE THE LEVEL OF THE TOP SURFACE OF THE GRAIN. IF MOVEMENT IS NOT UNIFORM, OPEN APPROPRIATE CLEAN-OUT DOORS AND INSPECT FOR POSSIBLE OBSTRUCTIONS OR GRAIN BRIDGING. ALL DELUX DRYERS SHOULD ALSO BE COMPLETELY UNLOADED DAILY FOR CLEANING AND INSPECTION INSIDE THE GRAIN COLUMNS.

6. **KEEP THE DRYER CLEAN. PERIODICALLY INSPECT AND CLEAN INSIDE PLENUM AND COOLING CHAMBERS, ALONG WITH THE AREA SURROUNDING THE DRYER. FINE HAIRS AND FIBERS COMMON TO SUNFLOWERS CAN BE DRAWN INTO THE FAN-HEATER UNIT(S), INCREASING THE RISK OF FIRE.**

7. **BE PREPARED IN CASE OF FIRE.** HAVE A HOSE AND/OR FIRE EXTINGUISHER NEAR THE DRYER. SMALL FIRES (SOMETIMES CALLED FLARES) CAN BE EXTINGUISHED BY SHUTTING OFF THE AIRFLOW AND APPLYING WATER TO THE OVERHEATED AREA. MORE EXCESSIVE FIRES MAY REQUIRE COMPLETE UNLOADING OF THE DRYER ONTO THE GROUND. **DO NOT UNLOAD INTO A STORAGE BIN.**

8. CHECK THE DRYER FOR A BUILDUP OF WAXY MATERIAL THAT MAY ACCUMULATE ON AUGER FLIGHTING AND OTHER SURFACES WHEN HANDLING SUNFLOWERS (ESPECIALLY WITH HIGHER MOISUTRE SUNFLOWERS). IF BUILDUP IS EXCESSIVE, IT SHOULD BE REMOVED.

9. DO NOT OVERDRY. **SUNFLOWERS DRY EASILY AND OVERDRYING CAN INCREASE THE RISK OF FIRE.** SAFE STORAGE MOISTURE CONTENT IS 9% FOR SUNFLOWER SEEDS.