DELUX
Continuous Flow GRAIN DRYERS

INSTALLATION & OPERATION MANUAL





- DP & DPSL SERIES
- DPX & DPXSL SERIES
- DPX4T SERIES
- DPX8T SERIES
- DPX12T SERIES
- DPX16GT SERIES

MADE IN USA

© 2014
DELUX MANUFACTURING COMPANY
4650 AIRPORT ROAD
KEARNEY, NEBRASKA 68848
TOLL FREE (800) 658-3240
WWW.DELUXMFG.COM

TABLE OF CONTENTS

SECTION 1. GENERAL

A. INTRODUCTION
B. USE OF MANUAL
C. ***!!!SAFETY CODE!!!***
D. SERVICE INFORMATION
E. WARRANTY PROCEDURES
F. **DELUX STANDARD LIMITED WARRANTY**

SECTION 2. INSTALLATION

A. BEFORE DELIVERY
B. SETUP
C. ELECTRICAL
D. LP FUEL SYSTEM
E. NG FUEL SYSTEM

SECTION 3. ELECTRICAL – FUEL HOOK-UP AND CHECKOUT

SECTION 4. STARTUP PROCEDURE
- Watlow EZ-ZONE Automatic Temperature Controller
- Watlow EZ-ZONE Automatic Moisture Controller

SECTION 5. SYSTEM OPERATION

SECTION 6. GRAIN DRYER PERFORMANCE CHART

SECTION 7. GRAIN SHRINKAGE TABLE

SECTION 8. DRYER OPERATING LOG

SECTION 9. SYSTEM SEQUENCE ANALYSIS AND TROUBLESHOOTING

SECTION 10. SHUTDOWN AND ***EMERGENCY SHUT-DOWN*** PROCEDURE

SECTION 11. DRAWINGS

SECTION 12. GENERAL OPERATOR MAINTENANCE

SECTION 13. REPLACEMENT PARTS

SECTION 14. COMPONENT LITERATURE

SECTION 15. SUNFLOWER DRYING RECOMMENDATIONS

GENERAL

A. INTRODUCTION

DELUX MFG COMPANY OF KEARNEY, NEBRASKA HAS MANY YEARS OF EXPERIENCE IN PRODUCING ENERGY SAVING, HIGH CAPACITY CONTINUOUS FLOW GRAIN DRYERS FOR BOTH FARM AND COMMERCIAL APPLICATIONS.

DELUX GRAIN DRYERS ARE DESIGNED AND MANUFACTURED TO PRODUCE QUALITY GRAIN AT A PROFIT. AN IDEAL BALANCE OF HOLDING CAPACITY, AIR FLOW, HEAT AND EXPOSURE TIME ARE PROVIDED. ALL DRYERS ARE DESIGNED FOR CONTINUOUS FLOW OPERATION. GRAIN ENTERS THE ROOF SECTION OF THE DRYER WHERE IT IS PREHEATED AS IT FLOWS DOWN INTO THE COLUMNS WHERE THE DRYING PROCESS IS STARTED. TWELVE(12) INCH GRAIN COLUMNS ON EACH SIDE OF THE DRYER PROVIDE FOR MAXIMUM FUEL EFFICIENCY AND MINIMUM GRAIN MOISTURE DIFFERENTIAL ACROSS THE COLUMNS. AS THE GRAIN ENTERS THE COOLING CHAMBER, OUTSIDE AMBIENT AIR IS DRAWN THROUGH THE WARM GRAIN REDUCING THE DRYER FUEL CONSUMPTION OVER COMPETITIVE CONVENTIONAL DRYERS, THUS COMPLETING THE DRYING PROCESS AND CONDITIONING THE GRAIN FOR A LONG SAFE STORAGE LIFE.

B. USE OF MANUAL

THIS MANUAL PROVIDES OPERATION AND SERVICE RECOMMENDATIONS ALONG WITH A REPLACEMENT PARTS LIST FOR YOUR DELUX GRAIN DRYER.

EACH SECTION OF THIS MANUAL IS FULLY ILLUSTRATED FOR FAST, ACCURATE REFERENCE. **IT IS HIGHLY RECOMMENDED THAT THIS MANUAL BE READ THOROUGHLY BY THOSE WHO ARE RESPONSIBLE FOR THE OPERATION AND MAINTENANCE OF THIS MACHINE.** REFER TO THE TABLE OF CONTENTS FOR THE LOCATION OF SPECIFIC INFORMATION.

C. SAFETY CODE---------USE CAUTION IN OPERATING THIS EQUIPMENT.

!!THE DESIGN AND MANUFACTURE OF THIS DRYER IS DIRECTED TOWARD OPERATOR SAFETY!!

USE EXTREME CAUTION IN WORKING AROUND HIGH SPEED FANS, GAS FIRED BURNERS, DISCHARGE AUGERS, AND AUXILIARY AUGERS, WHICH MAY START WITHOUT WARNING WHEN THE DRYER IS OPERATING ON AUTOMATIC CONTROLS.

CONTINUED SAFE, DEPENDABLE OPERATION OF AUTOMATIC EQUIPMENT DEPENDS TO A GREAT DEGREE UPON THE OWNER. FOR A SAFE DEPENDABLE DRYING SYSTEM, FOLLOW THE RECOMMENDATIONS WITHIN THE MANUAL AND MAKE IT A PRACTICE TO REGULARLY INSPECT THE OPERATION OF THE UNIT FOR ANY DEVELOPING PROBLEMS OR UNSAFE CONDITIONS. **KEEP A CLEAN DRYER**. **DO NOT ALLOW FINE MATERIAL TO ACCUMULATE ON THE PLENUM FLOOR OR A TRASH FIRE CAN RESULT. CHECKING THE DRYER AT LEAST EVERY 24 HOURS AND CLEANING WILL HELP PREVENT PROBLEMS.**

DRYER SHOULD NOT BE LEFT UNATTENDED FOR EXTENDED PERIODS OF TIME!!

D. SERVICE INFORMATION

OUR SERVICE DEPARTMENT WILL PROVIDE CONSULTATION ON THE INSTALLATION, OPERATION, AND MAINTENANCE TO YOU. ALSO, INFORMATION FROM YOU REGARDING ENCOUNTERED OPERATION OR SERVICE PROBLEMS THAT ARE NOT COVERED IN THIS MANUAL WILL BE GREATLY APPRECIATED.

DELUX MFG COMPANY HAS TRAINED SERVICE TECHNICIANS AVAILABLE TO ASSIST YOU IN THE EVENT YOU OR YOUR DEALER CANNOT CORRECT A PROBLEM. A PHONE CALL TO DELUX MFG COMPANY WILL PROVIDE AN ANSWER TO YOUR SERVICE PROBLEMS.

DELUX MFG COMPANY KEEPS A COMPLETE RECORD OF EACH CUSTOMER ORDER. HOWEVER, VALUABLE TIME CAN BE SAVED IF THE INFORMATION BELOW IS PROVIDED WITH YOUR INQUIRY. IT IS SUGGESTED THAT YOU OBTAIN THE MODEL NUMBER AND SERIAL NUMBER LOCATED IN THE ELECTRICAL CONTROL BOX ENCLOSURE AND ENTER IT BELOW FOR YOUR OWN RECORDS:

DEALER:_____

DATE OF PURCHASE:_____

MODEL:_____

SERIAL NUMBER:_____

CALL OR WRITE: DELUX MFG COMPANY
4650 AIRPORT ROAD
P.O. BOX 1027
KEARNEY, NE 68848-1027

PHONE: 308-237-2274 TOLL FREE: 800-658-3240
FAX: 308-234-3765 WEB: http://www.deluxmfg.com

E. WARRANTY PROCEDURES:

ALL WARRANTY ISSUES, PARTS AND SERVICE REQUESTS SHOULD BE HANDLED THROUGH YOUR LOCAL DEALER. IN THE CASE NO DEALER OR REPRESENTATIVE EXISTS IN YOUR AREA, OR A CONFLICT OF INTEREST EXISTS WITH YOUR DEALER AND/OR REPRESENTATIVE, PLEASE CONTACT THE DEPARTMENT OF ENGINEERING AND SERVICE AT DELUX MFG. COMPANY FOR PROCEDURES TO FOLLOW.

WARRANTY ON ALL DEFECTIVE PARTS MANUFACTURED BY DELUX MFG COMPANY WILL BE LIMITED TO THE SPECIFICATIONS SET FORTH BY THE INFORMATION PROVIDED BY DELUX MFG COMPANY IN IT'S STANDARD LIMITED WARRANTY POLICY. WARRANTY ON ALL DEFECTIVE PARTS NOT MANUFACTURED BY DELUX MFG COMPANY ARE LIMITED TO THE WARRANTIES PROVIDED BY THAT PART'S MANUFACTURER. THIS INCLUDES, BUT IS NOT LIMITED TO, ELECTRIC MOTORS, GEARHEADS, VALVES, REGULATORS AND OTHER PARTS.

DELUX MFG COMPANY IS NOT RESPONSIBLE FOR DEFECTIVE PARTS NOT OF ITS MANUFACTURE

AUTHORIZATION FOR CREDIT OR REPLACEMENT UNDER WARRANTY FOR DEFECTIVE PARTS OR MATERIAL MANUFACTURED BY DELUX MFG COMPANY WILL NOT BE ISSUED UNLESS STRICT COMPLIANCE IS GIVEN TO THE WARRANTY PARTS RETURN PROCEDURES LISTED BELOW. WHEN CONTACTING DELUX MFG COMPANY IN REGARD TO THE POLICIES AND PROCEDURES SET FORTH IN THIS MANUAL, DIRECT ALL CORRESPONDENCE AND CALLS TO THE DEPARTMENT OF ENGINEERING AND SERVICE AT DELUX MFG COMPANY.

EXCEPT AS SPECIFIED PREVIOUSLY, REFER ALL WARRANTY CLAIMS TO YOUR DEALER.

WARRANTY PARTS RETURN AND CREDIT PROCEDURE:

1. DELUX MFG COMPANY MUST BE NOTIFIED BY WRITING OR PHONE WITHIN FIFTEEN(15) DAYS AFTER AN ALLEGED FAILURE OF A PART MANUFACTURED BY DELUX MFG COMPANY IS DISCOVERED. FAILURE TO GIVE SUCH NOTICE WITHIN THE TIME SPECIFIED SHALL BE DEEMED AN ADMISSION BY THE PURCHASER THAT THE PRODUCT IS AS REPRESENTED AND WARRANTED BY DELUX MFG COMPANY AND FREE FROM ALL DEFECTS AND DELUX MFG COMPANY SHALL BE RELEASED FROM ANY AND ALL CLAIMS ARISING OUT OF OR IN CONNECTION WITH THE SALE OF THE PART OR PRODUCT.

2. UPON NOTIFICATION FROM PURCHASER THAT A PART MANUFACTURED BY DELUX MFG COMPANY HAS ALLEGEDLY FAILED, THE FAILURE IS COVERED BY THE STANDARD LIMITED WARRANTY AND THE **ORIGINAL WARRANTY REGISTRATION CARD** IS ON FILE WITH DELUX MFG COMPANY AT ITS KEARNEY, NEBRASKA HEADQUARTERS, ARRANGEMENTS WILL BE MADE BY DELUX MFG COMPANY TO SHIP THE REPLACEMENT PART TO PURCHASER WITH FREIGHT CHARGED AT THE STANDARD GROUND SHIPPING RATE.

3. ONCE THE REPLACEMENT PART HAS BEEN SHIPPED, PURCHASER WILL RECEIVE AN INVOICE FOR THE VALUE OF THE EQUIPMENT SHIPPED PLUS THE SHIPPING CHARGES. PURCHASER MUST THEN FULLY COMPLETE A **RETURN PARTS TAG** IDENTIFYING THE ALLEGED PART FAILURE AND RETURN SAID TAG ALONG WITH THE ALLEGEDLY FAILED PART TO DELUX MFG COMPANY WITH FREIGHT PREPAID BY PURCHASER. NO WARRANTY CREDIT SHALL BE GIVEN TO PURCHASER ON ALLEGEDLY FAILED PARTS THAT ARE NOT RETURNED TO DELUX MFG COMPANY WITHIN THIRTY(30) DAYS FROM DATE OF THE DISCOVERY OF THE ALLEGED FAILURE OR WITHIN FIFTEEN(15) DAYS FROM THE SHIPPING DATE INDICATED UPON THE INVOICE SENT WITH THE REPLACEMENT PART, WHICHEVER DATE IS LATER. PURCHASER MUST USE PROPER PACKING MATERIAL TO ENSURE AGAINST DAMAGE DURING SHIPPING. ANY SHIPPING DAMAGE CAUSED BY IMPROPER PACKING IS NOT COVERED UNDER THE STANDARD LIMITED WARRANTY.

4. THE INVOICE FOR THE REPLACEMENT PART PLUS THE FREIGHT CHARGE REMAINS PAYABLE BY PURCHASER UNTIL SUCH TIME AS THE ALLEGEDLY FAILED PART HAS BEEN RETURNED WITH A COMPLETED RETURN PARTS TAG ATTACHED AND THE PART HAS BEEN INSPECTED BY DELUX MFG COMPANY TO DETERMINE IF THE WARRANTY CLAIM IS VALID. PURCHASER WILL THEN RECEIVE NOTIFICATION FROM DELUX MFG COMPANY AS TO THE RECEIPT OF THE DEFECTIVE PART AND DELUX MFG COMPANY'S FINDINGS ON THE WARRANTY CLAIM WITHIN A REASONABLE TIME THEREAFTER.

5. IF THE PART IS FOUND TO BE DEFECTIVE BY DELUX MFG COMPANY, DELUX MFG COMPANY SHALL CREDIT THE AMOUNT OWED UNDER THE INVOICE SENT WITH THE REPLACEMENT PART EXCEPT FOR THE FREIGHT INCURRED IN SHIPPING THE REPLACEMENT PART TO PURCHASER.

6. IF THE PART RETURNED BY PURCHASER IS FOUND BY DELUX MFG COMPANY TO BE FUNCTIONAL AND OPERATIONAL AND IN COMPLIANCE WITH THE MANUFACTURED SPECIFICATIONS, IT WILL BE RETURNED UPON REQUEST TO PURCHASER AT PURCHASER'S COST. IF NO REQUEST IS RECEIVED BY PURCHASER, THE PART SHALL BE DESTROYED AFTER A PERIOD OF TEN(10) DAYS. DELUX MFG COMPANY'S CHARGES FOR INSPECTION OF A NON-DEFECTIVE DELUX MFG CO PART WILL BE SUBJECT TO THE STANDARD HOURLY RATE AND ZONE CHARGES.

7. NO NON-DELUX MFG COMPANY LABOR OR NON-DELUX MFG COMPANY REPLACEMENT PART WILL BE AUTHORIZED WITHOUT FIRST AN ESTIMATE OF THE COST OF PART AND LABOR PROVIDED TO DELUX MFG COMPANY. DEVIATIONS FROM THIS ESTIMATE WILL BE SOLELY AT THE PURCHASER OR DEALER'S COST.

F. **DELUX MFG COMPANY STANDARD LIMITED WARRANTY:**

DELUX MFG COMPANY'S WARRANTY OBLIGATIONS ARE LIMITED TO THE TERMS SET FORTH BELOW:

DELUX MFG COMPANY WARRANTS TO THE ORIGINAL PURCHASER THAT IF ANY PART MANUFACTURED BY DELUX MFG COMPANY IS PROVEN TO BE DEFECTIVE IN MATERIAL OR WORKMANSHIP WITHIN ONE(1) YEAR FROM DATE OF ORIGINAL INVOICE FROM DELUX MFG COMPANY AND PURCHASER FOLLOWS THE ABOVE WARRANTY PARTS AND CREDIT PROCEDURE, DELUX MFG COMPANY WILL, AT ITS OPTION, EITHER REPLACE OR REPAIR SAID PART AT ITS COST. THIS STANDARD LIMITED WARRANTY DOES NOT APPLY TO ANY DAMAGE RESULTING FROM NEGLIGENT USE, MISUSE, ACCIDENTAL DAMAGE, ABNORMAL OR UNUSUALLY HEAVY USE, NORMAL WEAR AND TEAR, NEGLECT, ABUSE, ALTERATION, IMPROPER INSTALLATION, UNAUTHORIZED REPAIR OR MODIFICATION, POOR OR IMPROPER MAINTENANCE OR USE BEYOND RATED CAPACITY.

THIS WARRANTY AND THE REMEDY SET FORTH ABOVE IS EXCLUSIVE AND IN LIEU OF ALL OTHERS, WHETHER ORAL OR WRITTEN, EXPRESSED, IMPLIED OR STATUTORY. DELUX MFG COMPANY SPECIFICALLY DISCLAIMS TO THE MAXIMUM EXTENT PERMITTED BY LAW ANY AND ALL IMPLIED WARRANTIES OR CONDITIONS AS TO THE PRODUCTS OR ANY OTHER MATTER WHATSOEVER. IN PARTICULAR, BUT WITHOUT LIMITATION, DELUX MFG COMPANY SPECIFICALLY DISCLAIMS ANY AND ALL IMPLIED WARRANTIES OR CONDITIONS OF SATISFACTORY QUALITY, MERCHANTABILITY, FITNESS FOR A PARTICULAR PURPOSE, DESCRIPTION, NON-INFRINGEMENT OF THIRD PARTY RIGHTS, ANY ADVICE, INSTRUCTION, RECOMMENDATION OR SUGGESTION PROVIDED BY AN AGENT, REPRESENTATIVE OR EMPLOYEE OF DELUX MFG COMPANY REGARDING OR RELATED TO THE CONFIGURATION, INSTALLATION, LAYOUT, SUITABILITY FOR A PARTICULAR PURPOSE, OR DESIGN OF SUCH PRODUCT OR PRODUCTS, OR ANY OTHER WARRANTY ARISING FROM A COURSE OF DEALING OR USAGE OF TRADE. DELUX MFG COMPANY RESERVES THE RIGHT TO MAKE DESIGN OR SPECIFICATION CHANGES AT ANY TIME. THIS STANDARD LIMITED WARRANTY DOES NOT APPLY TO, AND DELUX MFG COMPANY MAKES NO WARRANTY TO THE PURCHASER WITH REGARD TO, PARTS AND PRODUCTS NOT MANUFACTURED BY DELUX MFG COMPANY. IN THE EVENT AND TO THE EXTENT THAT APPLICABLE LAW DOES NOT ALLOW THE EXCLUSION OF IMPLIED WARRANTIES, THE ABOVE EXCLUSION WITH REGARD TO IMPLIED WARRANTIES MAY NOT APPLY.

DELUX MFG COMPANY SHALL NOT BE RESPONSIBLE OR LIABLE FOR ANY LOST PROFITS, DIRECT, INDIRECT, UNFORSEEABLE, SPECIAL, INCIDENTAL OR CONSEQUENTIAL DAMAGES HOWEVER CAUSED AND WHETHER OR NOT DELUX MFG COMPANY WAS ADVISED OF THE POSSIBILITY OF SUCH DAMAGES, WHETHER BASED ON CONTRACT, IN TORT OR ANY OTHER LEGAL THEORY. THE REMEDY STATED HEREIN SHALL BE THE SOLE AND EXCLUSIVE REMEDY AVAILABLE UNDER THIS WARRANTY.

DELUX MFG COMPANY ASSUMES NO RESPONSIBILITY FOR FIELD MODIFICATIONS OR ERECTION DEFECTS WHICH CREATE STRUCTURAL OR STORAGE QUALITY PROBLEMS, MODIFICATIONS TO THE PRODUCT NOT SPECIFICALLY COVERED BY THE CONTENTS OF THE DELUX MFG COMPANY SERVICE MANUAL WILL NULLIFY ANY PRODUCT WARRANTY THAT MIGHT HAVE BEEN AVAILABLE OTHERWISE.

NO DELUX MFG COMPANY DISTRIBUTOR, RESELLER, DEALER, AGENT OR EMPLOYEE IS AUTHORIZED TO MAKE ANY MODIFICATIONS, EXTENSION OR ADDITION TO THIS WARRANTY. DELUX MFG COMPANY SHALL NOT BE RESPONSIBLE FOR ANY CHARGES INCURRED IN THE REPAIRING OR SERVICING OF ANY DELUX MFG COMPANY PRODUCT OR PART EXCEPT AS SUCH REPAIRS ARE MADE BY AUTHORIZED DELUX MFG COMPANY FIELD SERVICE PERSONNEL OR AS APPROVED IN WRITING FROM DELUX MFG COMPANY.

PRIOR TO INSTALLATION, PURCHASER IS RESPONSIBLE FOR RESEARCHING AND COMPLYING WITH ALL FEDERAL, STATE AND LOCAL STATUTES, REGULATIONS AND/OR CODES WHICH MIGHT APPLY TO THE LOCATION AND INSTALLATION OF THE DELUX MFG COMPANY PRODUCT.

ADDITIONAL DISCLAIMER OF WARRANTY:

ALL MANUFACTURER LABEL PRODUCTS NOT MANUFACTURED BY DELUX MFG COMPANY ARE EXCLUDED FROM COVERAGE UNDER THE DELUX MFG COMPANY STANDARD LIMITED WARRANTY.

NO ELECTRIC MOTOR WARRANTY:

DELUX MFG COMPANY'S STANDARD LIMITED WARRANTY DOES NOT COVER ANY AND ALL ELECTRIC MOTORS USED BY DELUX MFG COMPANY IN ITS PRODUCTS. PURCHASER'S SOLE CLAIM FOR WARRANTY ON THESE ELECTRIC MOTORS LIES WITH THE MOTOR'S MANUFACTURES. IN SUCH EVENT, PURCHASER'S DRYER SERVICE MANUAL CONTAINS A LIST OF THE MOTOR MANUFACTURE'S SERVICE CENTERS WHERE ALL FURTHER INQUIRIES REGARDING THE MOTOR AND ITS WARRANTY SHOULD BE PLACED. UNDER NO CIRCUMSTANCES WHATSOEVER WILL DELUX MFG COMPANY BE LIABLE FOR AN UNAUTHORIZED ELECTRIC MOTOR REPAIR BY A LOCAL MOTOR SHOP OR ELECTRICIAN.

RETURN MERCHANDISE PROCEDURES:

1. CALL OR WRITE: PHONE: 308-237-2274 TOLL FREE: 800-658-3240
   FAX: 308-234-3765 WEB: http://www.deluxmfg.com

   DELUX MFG COMPANY
   4650 AIRPORT ROAD
   P.O. BOX 1027
   KEARNEY, NE 68848-1027

   ASK FOR A **RETURN PARTS TAG**. IN THAT REQUEST IDENTIFY THE MERCHANDISE YOU WISH TO RETURN, ITS CONDITION AND THE INVOICE ON WHICH IT WAS ORGINALLY BILLED.

2. AFTER RECEIPT OF THE RETURN PARTS TAG, SHIP THE ITEM(S) WITH PREPAID FREIGHT ALONG WITH THE RETURN PARTS TAG TO DELUX MFG. COMPANY. A 15% RESTOCKING FEE WILL BE CHARGED ON ALL MERCHANDISE RETURNED THIRTY (30) DAYS AFTER THE ORIGINAL DATE OF PURCHASE.

3. ONCE THE MERCHANDISE HAS BEEN RECEIVED AND INSPECTED BY DELUX MFG. COMPANY, IF APPROPRIATE A CREDIT WILL BE ISSUED TO YOUR ACCOUNT.

4. ANY MERCHANDISE RETURNED THAT HAS BEEN USED OR ABUSED WILL NOT RECEIVE A CREDIT TO YOUR ACCOUNT. SHIPMENTS OF INCORRECT MERCHANDISE DUE TO MIS-ORDERING BY THE PURCHASER ARE ALSO SUBJECT TO A 15% RESTOCKING FEE.

OUT OF WARRANTY SERVICE:

DRYERS REQUIRING DELUX MFG COMPANY REPAIR WORK WILL BE REPAIRED AT THE STANDARD SERVICE CHARGES (HOURLY LABOR CHARGE, TRIP CHARGE (INCLUDES COST OF LODGING, MEALS, AND MILEAGE COSTS), PLUS PARTS). THE REPAIRED PARTS WILL CARRY A THIRTY(30) DAY LIMITED WARRANTY. THE SAME EXCLUSIONS AND LIMITATIONS OF THE DELUX MFG COMPANY STANDARD LIMITED WARRANTY POLICY REFERENCED ABOVE ALSO APPLY TO THIS THIRTY(30) DAY LIMITED WARRANTY. REFER TO THE TABLE OF CONTENTS FOR LOCATION OF THE PRESEASON AND REGULAR SEASON RATE CHARGES.

TERMS:

DELUX DRYERS REQUIRING SERVICE FOR CUSTOMERS WHO HAVE AN ESTABLISHED LINE OF CREDIT WILL BE INVOICED FOR SERVICES RENDERED. CUSTOMERS NOT HAVING AN ESTABLISHED LINE OF CREDIT WILL BE ON A CASH IN ADVANCE OR CASH ON COMPLETION OF SERVICE. ALL SERVICE OR REPAIR WORK RENDERED BY AUTHORIZED DELUX SERVICE PERSONNEL MUST BE INVOICED THROUGH AN EXISTING AUTHORIZED DELUX MFG COMPANY DEALER.

INSTALLATION

THE DRYER IS DESIGNED FOR MINIMAL FIELD ERECTION TIME, DEPENDING ON DRYER MODEL AND ASSOCIATED SECTIONS. THIS MAY INCLUDE ASSEMBLY AND INSTALLATION OF THE GARNER BIN.

A. BEFORE DELIVERY

1. **SITE SELECTION**: **THE DRYER *IS NOT TO BE* OPERATED INSIDE A BUILDING OR ENCLOSURE. SUFFICIENT AREA AROUND THE DRYER** MUST BE MAINTAINED TO ALLOW ADEQUATE AIR FLOW TO SUPPLY THE DRYER AND TO ALLOW EXHAUSTED AIR TO ESCAPE FREELY TO ATMOSPHERE. **DO NOT OPERATE DRYER IN AN AREA WHERE COMBUSTIBLE MATERIALS CAN BE DRAWN INTO THE FANS.** ALSO CONSIDER THE GRAIN HANDLING SYSTEMS AND THE LOCATIONS OF STORAGE BINS AND EXISTING CONVEYORS IN SELECTING THE DRYER SITE. REFER TO BACK PAGE OF BROCHURE FOR GENERAL DIMENSIONS AND SPECIFICATIONS.

2. **SUPPLY AND TAKE AWAY SYSTEMS** SUCH AS FILL AUGER AND UNLOAD AUGERS SHOULD BE OF SUFFICIENT CAPACITY TO HANDLE MAXIMUM LOAD AND UNLOAD REQUIREMENTS OF EACH DRYER. (APPROXIMATELY TWO (2) TIMES EACH DRYER'S RATED CAPACITY, BASED ON FIVE(5) POINT MOISTURE REMOVAL IS RECOMMENDED.)

3. **DRYER IS TO BE SET PERMANENTLY**. DELUX MAINTAINS RECOMMENDED FOUNDATION DRAWINGS FOR EACH DRYER MODEL THAT SHOULD BE FOLLOWED FOR NEW INSTALLATIONS. IF ANY DOUBT, CONSULT LOCAL CERTIFIED ENGINEER FOR YOUR SEPECIFIC APPLICATION.

IMPORTANT: DRYER MUST BE LEVEL BOTH LENGTHWISE AND CROSSWISE AT ALL TIMES DURING THE DRYING PROCESS OR DAMAGE TO THE DRYER WILL RESULT.

4. **CONSULT YOUR LOCAL ELECTRICAL POWER COMPANY FOR PROPER TRANSFORMER SIZING. CONSULT WITH YOUR LOCAL ELECTRICIAN FOR INSTALLATION OF ELECTRICAL SERVICE.**

5. **CONSULT YOUR PROPANE OR NATURAL GAS SERVICE SUPPLIER FOR LOCATING AND SIZING TANK, METERS AND REGULATORS.**

B. SET-UP

1. POSITION DRYER IN SELECTED LOCATION, LEVEL AND SECURE.

2. MAKE SURE ALL BOLTS AND SCREWS ARE IN PLACE AND TIGHT. MAKE SURE METERING ROLLS AND AUGERS ARE FREE OF ANY FOREIGN MATERIAL.

3. ASSEMBLE GARNER BIN PARTS, REFER TO DRAWING FOR PROPER PART ASSEMBLY. GARNER BIN CAN BE ASSEMBLED ON THE GROUND AND HOISTED TO THE TOP OF THE DRYER, OR IT CAN BE ASSEMBLED PIECE BY PIECE ON TOP OF THE DRYER. A HOLE IS PROVIDED IN THE ROOF SECTION OF THE GARNER BIN FOR FILL SPOUTING ATTACHMENT. THE HINGED DOOR IN THE TOP OF THE GARNER BIN ALLOWS ACCESS TO AUGER BEARINGS AND HANGERS FOR ASSEMBLY AND REPAIR.

4. **INSTALL CATWALK RAILINGS AS SHOWN ON DRAWING**.

5. INSTALL MOTOR AND CONDUIT ASS'Y PLUS HOOK-UP OF HIGH GRAIN SHUTDOWN ASS'Y LOCATED ON THE TOP ROOF SECTION. ATTACH ELECTRICAL WIRING PER DRAWING. (NOTE: FILL SWITCH ADJUSTMENT FOR PROPER OPERATION MUST BE DONE AT THE TIME OF INITIAL FILLING).

C. ELECTRICAL

1. **POWER SUPPLY** - AN ADEQUATE POWER SUPPLY AND PROPER WIRING ARE IMPORTANT FACTORS FOR MAXIMUM PERFORMANCE AND LONG DRYER LIFE. ELECTRICAL SERVICE MUST BE OF ADEQUATE SIZE TO PREVENT LOW VOLTAGE DAMAGE TO MOTORS AND CONTROL CIRCUITS. SEE TABLE 2.1 FOR FULL LOAD AMPS PER DRYER MODEL.

NOTE: ALL MOTORS ARE EQUIPPED FOR 230V SINGLE (1)PHASE, 208V, 240V, 380V, 415V, 480V OR 575V THREE (3)PHASE OPERATION. WHEN ONLY 230V SINGLE (1)PHASE POWER IS AVAILABLE, A PHASE CONVERTER MAY BE INSTALLED AHEAD OF DRYER TO OBTAIN THREE (3)PHASE POWER TO OPERATE 240V OR 480V THREE (3)PHASE DRYERS.

2. **POWER SUPPLY DISCONNECT - ALL DRYERS SHOULD BE EQUIPPED WITH A POWER DISCONNECT SWITCH AHEAD OF DRYER CONTROL BOX TO PERMIT TOTAL POWER SHUT DOWN BEFORE OPENING CONTROL BOX, AS REQUIRED FOR INSPECTION AND SERVICE. THE POWER DISCONNECT SWITCH SHOULD ALSO BE LOCATED CLOSE TO THE DRYER FOR QUICK SHUT DOWN.**

3. **ELECTRICAL PHASING** - FOR YOUR CONVENIENCE YOUR DRYER HAS HAD ALL MOTORS PHASED. **IF ONE MOTOR RUNS BACKWARDS, THEY ALL WILL.** SIMPLY CHANGE THE TWO MAIN WIRE LEADS AROUND AT MAIN TERMINAL CONNECTION BLOCK FOR PROPER ROTATION. **(NOTE: CONTROL DESIGN REQUIRES WILD LEG TO BE CONNECTED TO TERMINAL "L2" ON 240V THREE (3)PHASE DRYERS).**

4. **CONNECTING AUXILIARY CONVEYORS** - AUXILIARY STARTING EQUIPMENT IS SUPPLIED AS STANDARD EQUIPMENT. REFER TO DRAWING FOR PROPERLY CONNECTING AND INTERLOCKING WET LOADING AND DRY UNLOADING AUXILIARY STARTING EQUIPMENT LOCATED IN THE ELECTRICAL CONTROL PANEL. MAKE CERTAIN THAT THE MOTOR OVERLOAD PROTECTION MATCHES THE MOTOR BEING USED.

5. **IMPORTANT:**

    1. **MAKE SURE DRYER IS PROPERLY GROUNDED.** GROUND LUG IS PROVIDED.
    2. **HAVE THE POWER COMPANY OR YOUR LOCAL ELECTRICIAN CHECK LINE VOLTAGE AND AMPERAGE.** MAKE SURE VOLTAGE DROP IS MINIMUM.

D. LP FUEL SYSTEMS

1. CONSULT YOUR LOCAL PROPANE SUPPLIER FOR PROPER LINE SIZING REQUIREMENTS AND LOCAL GAS CODES. PROPER LINE AND PRESSURE REQUIREMENTS SHOULD BE BASED OFF OF MAXIMUM BTU/HR CONSUMPTION PER DRYER MODEL. SEE TABLE 2.2.

2. THE DRYER IS DESIGNED TO OPERATE ON LIQUID PROPANE DRAWN FROM THE SUPPLY TANK, HOWEVER INITIAL START-UP REQUIRES VAPOR TO BE DRAWN FROM THE TANK TO ALLOW THE DRYER WARM UP. ONCE THE TEMPERATURE INSIDE THE DRYER HAS RISEN, YOU MAY SWITCH OVER TO LIQUID. TYPICALLY, A “Y” IS INSTALLED AT THE SUPPLY TANK TO FEED EITHER LIQUID OR VAPOR TO THE LP INLET MANIFOLD OF THE DRYER. IN OTHER INSTANCES RUNNING SEPARATE LINES FOR BOTH LIQUID AND VAPOR MAY BE APPROPRIATE.

3. NORMAL OPERATING VAPOR PRESSURE (ON REGULATOR) IS 10-20 PSI.

4. BEFORE STARTING THE DRYER FOR THE FIRST TIME, MAKE CERTAIN THAT PIPE UNIONS & FITTINGS ARE PROPERLY TIGHTENED BOTH INSIDE AND OUTSIDE OF THE DRYER.

5. IN SOME CASES BURNER ORIFICES MAY NEED TO BE RESIZED TO ACCOMMODATE VARYING DRYING CONDITIONS.

E. NG FUEL SYSTEMS

1. CONSULT YOUR LOCAL GAS SUPPLIER FOR PROPER LINE SIZING REQUIREMENTS AND LOCAL GAS CODES. PROPER LINE SIZE AND PRESSURE REQUIREMENTS SHOULD BE BASED OFF OF MAXIMUM BTU/HR CONSUMPTION PER DRYER MODEL. SEE TABLE 2.2.

2. ALL NATURAL GAS DRYERS REQUIRE A PRESSURE REGULATOR NEAR THE BASE OF THE DRYER TO MINIMIZE PRESSURE FLUCTUATIONS.

3. SUPPLIED PRESSURE TO DRYER FUEL SYSTEM SHOULD NOT EXCEED 20 PSI.

4. BEFORE STARTING THE DRYER FOR THE FIRST TIME, MAKE CERTAIN THAT ALL PIPE UNIONS BOTH INSIDE AND OUTSIDE THE DRYER ARE PROPERLY TIGHTENED.

5. IN SOME CASES BURNER ORIFICES MAY NEED TO BE RESIZED TO ACCOMADATE VARYING DRYING CONDITIONS.

TABLE 2.1

MODEL	FT	FULL LOAD AMPS (DRYER ONLY)					
		230V 1P	**208V 3P**	**240V 3P**	**380V 3P**	**480V 3P**	**575V 3P**
MSF-31010	10	55.9	N/A	N/A	N/A	N/A	N/A
MSF-41515	10	77.9	50.3	48.3	29.6	24.3	19.8
MSF-62520	15	N/A	66.2	62.9	37.2	31.6	25.4
MSF-72525	15	N/A	78.5	74.9	44.2	37.6	30.1
DP 2510	10	50.0	N/A	N/A	N/A	N/A	N/A
DP 3015	10	72.0	N/A	N/A	N/A	N/A	N/A
DP 4020	15	99.5	N/A	N/A	N/A	N/A	N/A
DP 5020	20	99.5	N/A	N/A	N/A	N/A	N/A
DP 7530	30	145.6	N/A	N/A	N/A	N/A	N/A
DP 10040	40	191.2	N/A	N/A	N/A	N/A	N/A
DP 3015	10	N/A	47.2	45.3	27.8	22.8	18.6
DP 4025	15	N/A	78.5	74.9	44.2	37.6	30.1
DP 6030	20	N/A	91.2	87.3	53.2	43.8	35.8
DP 7550	25	N/A	147.7	140.3	81.8	70.3	56.1
DP 9045	30	N/A	135.1	128.9	77.8	64.6	52.7
DP 12060	40	N/A	181.0	172.2	105.0	86.5	70.4
DPSL 3520	10	N/A	60.2	57.1	33.8	28.7	23.0
DPSL 4530	15	N/A	93.2	90.9	51.2	45.6	35.2
DPSL 7040	20	N/A	117.2	110.9	65.2	55.6	44.6
DPSL 8560	25	N/A	177.1	172.3	95.8	86.3	66.3
DPSL 10560	30	N/A	174.1	164.3	95.8	82.3	65.9
DPSL 14080	40	N/A	233.0	219.4	129.0	110.1	88.0
DPX 4525	10	N/A	75.6	72.1	42.6	36.2	28.9
DPX 7040	15	N/A	117.2	110.9	65.2	55.6	44.6
DPX 9050	20	N/A	141.8	134.9	79.2	67.6	54.0
DPX 13575	30	N/A	214.0	202.9	117.8	101.6	80.9
DPX 180100	40	N/A	293.7	278.5	163.1	139.4	111.1
DPXSL 5030	10	N/A	90.3	88.1	49.6	44.2	34.0
DPXSL 8050	15	N/A	141.8	134.9	79.2	67.6	54.0
DPXSL 10060	20	N/A	171.2	169.7	93.2	83.6	64.2
DPXSL 12560	25	N/A	180.1	174.9	96.8	87.6	67.2
DPXSL 15090	30	N/A	258.1	250.9	138.8	125.6	96.2
DPXSL 200120	40	N/A	352.5	342.5	191.1	171.4	131.5

**** FULL LOAD AMPS BASED ON MOTOR TAG DATA AVAILABLE AT DATE PUBLISHED.**
**** FULL LOAD AMPS DOES NOT INCLUDE ANY AUX. HANDLING EQUIPMENT.**

TABLE 2.1 – CONT'D

MODEL	FT	FULL LOAD AMPS (DRYER ONLY)					
		230V 1P	208V 3P	240V 3P	380V 3P	480V 3P	575V 3P
DPX4T 5630	10	N/A	93.2	90.9	51.2	45.6	35.2
DPX4T 8460	15	N/A	167.1	152.7	91.3	76.8	61.8
DPX4T 11260	20	N/A	177.1	172.3	95.8	86.3	66.3
DPX4T 140100	25	N/A	280.1	254.9	146.8	127.6	101.2
DPX4T 16890	30	N/A	263.0	255.4	143.0	128.1	98.2
DPX4T 224120	40	N/A	352.5	342.5	191.1	171.4	131.5
DPX8T 6440	10	N/A	117.2	110.9	65.2	55.6	45.2
DPX8T 12880	20	N/A	225.1	212.3	123.8	106.3	86.3
DPX8T 160120	25	N/A	327.0	297.4	178.0	149.7	120.0
DPX8T 192120	30	N/A	335.0	315.4	185.0	158.1	128.2
DPX8T 256160	40	N/A	448.5	422.5	247.1	211.4	171.5
DPX12T 7250	10	N/A	143.2	130.9	76.2	65.6	52.2
DPX12T 10860	15	N/A	174.1	169.7	94.8	85.0	65.4
DPX12T 144100	20	N/A	277.1	252.3	145.8	126.3	100.3
DPX12T 175120	25	N/A	327.0	297.4	178.0	149.7	120.0
DPX12T 216150	30	N/A	413.0	375.4	218.0	188.1	149.2
DPX12T 288200	40	N/A	557.4	507.0	295.3	253.9	201.5
DPX16GT 8250	10	N/A	143.2	130.9	76.2	65.6	52.2
DPX16GT 12360	15	N/A	174.1	169.7	94.8	85.0	65.4
DPX16GT 164100	20	N/A	277.1	252.3	145.8	126.3	100.3
DPX16GT 210120	25	N/A	327.0	297.4	178.0	149.7	120.0
DPX16GT 246150	30	N/A	413.0	375.4	218.0	188.1	149.2
DPX16GT 328200	40	N/A	557.4	507.0	295.3	253.9	201.5

**** FULL LOAD AMPS BASED ON MOTOR TAG DATA AVAILABLE AT DATE PUBLISHED.**
**** FULL LOAD AMPS DOES NOT INCLUDE ANY AUX. HANDLING EQUIPMENT.**

TABLE 2.2

MODEL	(FT)	TOTAL CFM	MINIMUM TEMP. RISE (F)	MINIMUM BTU/HR (MILLION)	MAXIMUM TEMP. RISE (F)	MAXIMUM BTU/HR (MILLION)	*MAX. w/ OPT. RECLAIM* TEMP. RISE (F)	*MAX. w/ OPT. RECLAIM* BTU/HR (MILLION)
MSF-31010	(10)	13,435	50	0.7	200	2.9		na
MSF-41515	(10)	19,150	50	1.0	200	4.1		na
MSF-62520	(15)	21,863	50	1.2	200	4.7		na
MSF-72525	(15)	24,804	50	1.3	200	5.4		na
DP 2510	(10)	10,077	50	0.5	170	1.9	140	1.5
DP 3015	(10)	14,985	50	0.8	170	2.8	140	2.3
DP 4020	(15)	20,154	50	1.1	170	3.7	140	3.0
DP 5020	(20)	20,154	50	1.1	170	3.7	140	3.0
DP 7530	(30)	30,231	50	1.6	170	5.6	140	4.6
DP 10040	(40)	40,308	50	2.2	170	7.4	140	6.1
DP 3015	(10)	14,985	50	0.8	170	2.8	140	2.3
DP 4025	(15)	20,511	50	1.1	170	3.8	140	3.1
DP 6030	(20)	29,970	50	1.6	170	5.5	140	4.5
DP 7550	(25)	41,022	50	2.2	170	7.5	140	6.2
DP 9045	(30)	44,955	50	2.4	170	8.3	140	6.8
DP 12060	(40)	59,940	50	3.2	170	11.0	140	9.1
DPSL 3520	(10)	17,808	50	1.0	170	3.3	140	2.7
DPSL 4530	(15)	22,896	50	1.2	170	4.2	140	3.5
DPSL 7040	(20)	35,616	50	1.9	170	6.5	140	5.4
DPSL 8560	(25)	45,792	50	2.5	170	8.4	140	6.9
DPSL 10560	(30)	53,424	50	2.9	170	9.8	140	8.1
DPSL 14080	(40)	71,232	50	3.8	170	13.1	140	10.8
DPX 4525	(10)	20,511	50	1.1	170	3.8	140	3.1
DPX 7040	(15)	35,616	50	1.9	170	6.5	140	5.4
DPX 9050	(20)	41,022	50	2.2	170	7.5	140	6.2
DPX 13575	(30)	61,533	50	3.3	170	11.3	140	9.3
DPX 180100	(40)	82,044	50	4.4	170	15.1	140	12.4
DPXSL 5030	(10)	22,896	50	1.2	170	4.2	140	3.5
DPXSL 8050	(15)	41,022	50	2.2	170	7.5	140	6.2
DPXSL 10060	(20)	45,792	50	2.5	170	8.4	140	6.9
DPXSL 12560	(25)	57,876	50	3.1	170	10.6	140	8.7
DPXSL 15090	(30)	68,688	50	3.7	170	12.6	140	10.4
DPXSL 200120	(40)	91,584	50	4.9	170	16.8	140	13.8

**** OPERATING FUEL CONSUMPTION WILL FALL BETWEEN THE MINIMUM AND MAXIMUM VALUES, AND IS DEPENDENT UPON AMBIENT CONDITIONS AND HEAT RECAPTURE FROM COOLING GRAIN.**

TABLE 2.2 – CONT'D

MODEL	(FT)	TOTAL CFM	MINIMUM TEMP. RISE (F)	MINIMUM BTU/HR (MILLION)	MAXIMUM TEMP. RISE (F)	MAXIMUM BTU/HR (MILLION)	*MAX. w/ OPT. RECLAIM* TEMP. RISE (F)	*MAX. w/ OPT. RECLAIM* BTU/HR (MILLION)
DPX4T 5630	(10)	28,938	50	1.6	170	5.3	140	4.4
DPX4T 8460	(15)	44,043	50	2.4	170	8.1	140	6.7
DPX4T 11260	(20)	57,876	50	3.1	170	10.6	140	8.7
DPX4T 140100	(25)	79,500	50	4.3	170	14.6	140	12.0
DPX4T 16890	(30)	86,814	50	4.7	170	15.9	140	13.1
DPX4T 224120	(40)	115,752	50	6.3	170	21.3	140	17.5
DPX8T 6440	(10)	34,201	50	1.8	170	6.3	140	5.2
DPX8T 12880	(20)	68,402	50	3.7	170	12.6	140	10.3
DPX8T 160120	(25)	88,086	50	4.8	170	16.2	140	13.3
DPX8T 192120	(30)	102,603	50	5.5	170	18.8	140	15.5
DPX8T 256160	(40)	136,804	50	7.4	170	25.1	140	20.7
DPX12T 7250	(10)	39,750	50	2.1	170	7.3	140	6.0
DPX12T 10860	(15)	57,876	50	3.1	170	10.6	140	8.7
DPX12T 144100	(20)	79,500	50	4.3	170	14.6	140	12.0
DPX12T 175120	(25)	88,086	50	4.8	170	16.2	140	13.3
DPX12T 216150	(30)	119,250	50	6.4	170	21.9	140	18.0
DPX12T 288200	(40)	159,000	50	8.6	170	29.2	140	24.0
DPX16GT 8250	(10)	39,750	50	2.1	170	7.3	140	6.0
DPX16GT 12360	(15)	57,876	50	3.1	170	10.6	140	8.7
DPX16GT 164100	(20)	79,500	50	4.3	170	14.6	140	12.0
DPX16GT 210120	(25)	88,086	50	4.8	170	16.2	140	13.3
DPX16GT 246150	(30)	119,250	50	6.4	170	21.9	140	18.0
DPX16GT 328200	(40)	159,000	50	8.6	170	29.2	140	24.0

**** OPERATING FUEL CONSUMPTION WILL FALL BETWEEN THE MINIMUM AND MAXIMUM VALUES, AND IS DEPENDENT UPON AMBIENT CONDITIONS AND HEAT RECAPTURE FROM COOLING GRAIN.**

ELECTRICAL - FUEL HOOK-UP AND CHECKOUT

1. **POWER SUPPLY**

AN ADEQUATE POWER SUPPLY AND PROPER WIRING ARE IMPORTANT FOR MAXIMUM PERFORMANCE AND LONG DRYER LIFE. **ELECTRICAL SERVICE MUST BE ADEQUATE IN SIZE TO PREVENT LOW VOLTAGE DAMAGE TO MOTORS AND CONTROL CIRCUITS.** PROPER LINE PHASING MUST ALSO BE OBSERVED.

2. **POWER SUPPLY CIRCUIT BREAKER**

ALL DELUX GRAIN DRYERS SHOULD BE EQUIPPED WITH A MASTER CIRCUIT DISCONNECT TO PERMIT TOTAL SHUT-DOWN OF THE DRYING SYSTEM. IT IS SUGGESTED THAT ALL WET AND DRY HANDLING EQUIPMENT BE INTERLOCKED THROUGH MASTER CIRCUIT DISCONNECT. CALCULATE TOTAL AMP. LOAD OF SYSTEM TO MAKE SURE LOAD DOES NOT EXCEED DISCONNECT RATING.

3. **TRANSFORMERS - WIRE - VOLTAGE DROP**

CONTACT THE SERVICE REPRESENTATIVE OF YOUR LOCAL POWER COMPANY TO ADVISE OF ADDITIONAL LOAD TO BE PLACED ON THE LINE. CHECK ON KVA RATING OF TRANSFORMERS, CONSIDERING TOTAL H.P. LOAD. THE POWER SUPPLY WIRING AND TRANSFORMERS MUST BE CAPABLE OF PROVIDING ADEQUATE MOTOR STARTING AND OPERATING VOLTAGE.

4. **CONSIDERING TOTAL H.P. LOAD** AND DISTANCE FROM TRANSFORMER, SIZE AND INSTALL WIRE AND CONDUIT BETWEEN TRANSFORMER AND DRYER ELECTRICAL SERVICE CENTER.

***NOTE: MAKE SURE DRYER IS ADEQUATELY GROUNDED.**

5. **CONDUIT INSTALLATION**

GARNER BIN HIGH GRAIN SHUTDOWN, LOW GRAIN SHUTDOWN CONTROLS AND THE LEVELING AUGER MOTOR ARE SUPPLIED WITH CONDUIT AND WIRING, REFER TO DRAWING OF GARNER.

6. **INTERNAL FUEL LINE HOOK-UP**

THE DRYER IS EQUIPPED WITH A PLUMBING TRAIN CONTAINING SAFETY CONTROLS. REFER TO DRAWINGS OF FUEL LINE HOOK-UP FOR ALL MODELS.

7. **FUEL SUPPLY**

(REFER TO SECTION 5 OF SERVICE MANUAL FOR "FUEL SUPPLY RECOMMENDED"). CONTACT YOUR LOCAL FUEL SUPPLIER FOR PROPER SIZING OF REGULATORS AND PLUMBING.

8. **FLAME ROD(S) AND SPARK IGNITER ADJUSTMENT**

CHECK BURNER FLAME ROD(S) AND SPARK IGNITER ADJUSTMENT.

A. THE FLAME ROD(S) SHOULD BE CHECKED TO SEE THAT THE CERAMIC BASE HAS NOT BEEN CRACKED. CHECK SPARK IGNITER: (SHOULD HAVE 1/8" TO 3/16" GAP).

9. **INSPECT INSIDE OF DRYER**

CHECK INSIDE OF DRYER SECTION FOR FOREIGN MATERIAL AND REMOVE. CHECK METERING ROLLS FOR FOREIGN OBJECTS SUCH AS BOLTS, ETC.

10. **MOTOR ROTATION**

A. **FAN ROTATION**: LOOKING INTO FAN OUTLET, ROTATION SHOULD BE CLOCKWISE. WHEN ELECTRICAL SERVICE IS INSTALLED, ATTENTION MUST BE PAYED TO PROPER PHASING. ALL MOTORS HAVE BEEN PHASED AT FACTORY. IN THE EVENT PHASES ARE REVERSED, SHUT OFF POWER ON MAIN BREAKER, REVERSE T1 AND T2 AT MAIN BREAKER. **CHECK BACKSIDE OF FAN HUBS FOR FOREIGN OBJECTS THAT WILL THROW FAN OUT OF BALANCE.** FAN CURRENT SHOULD BE CHECKED TO BE SURE AMPERAGE IS WITHIN LIMITS ON NAMEPLATE.

B. **DISCHARGE CONVEYOR**:

1. **SCREW CONVEYOR** - CHECK ROTATION BY OBSERVING AUGER FLIGHT WHILE IN OPERATION. IF ROTATION IS INCORRECT, REVERSE T1 AND T2 MOTOR LEADS AT CONVEYOR STARTER.

2. **METERING ROLL DIRECTION** - THIS SHOULD BE CORRECT FROM THE FACTORY. ROTATION SHOULD ALLOW GRAIN TO FLOW OVER FEED ROLL. IF DIRECTION IS INCORRECT, REVERSE LEADS A1 AND A2 ON SCR CONTROL UNIT.

STARTUP PROCEDURE

ALL MODEL SERIES DRYERS

1. **CHECK DRYER THOROUGHLY BEFORE STARTING**

   A. CHECK AND CLEAN SCREENS IN PLENUM CHAMBER.
   B. CHECK METERING SYSTEM FOR FOREIGN MATERIAL AND CLEAN.
   C. CHECK AUGERS AND AUXILIARY EQUIPMENT FOR CORRECT ROTATION.

2. **FRESH-AIR INTAKE DOORS**

   A. FRESH-AIR INTAKE DOORS ARE PROVIDED TO ALLOW FRESH AIR TO FLOW DIRECTLY TO THE FAN(S). THE FAN(S) CANNOT RECEIVE ENOUGH AIR DIRECTLY THROUGH THE GRAIN BEING COOLED SO FRESH-AIR INTAKE PORTS ARE PROVIDED. THESE PORTS ALLOW THE OPERATOR TO HAVE MORE CONTROL OVER THE OUT GOING TEMPERATURE OF THE PRODUCT BEING DRIED.

   B. **SETTINGS:** OPEN THE DOORS THAT ARE LOCATED DIRECTLY ON THE FAN(S) FULL OPEN. OPEN OTHER DOORS AS NEEDED BUT NOT LESS THAN ONE INCH. WHEN THE GRAIN IS NOT COOL ENOUGH CLOSE THE DOORS DOWN THAT ARE NOT LOCATED DIRECTLY ON THE FAN(S) - WHEN GRAIN IS TOO COOL OPEN THESE DOORS. KEEP ALL DOORS THAT ARE BEING ADJUSTED THE SAME AS EACH OTHER. WHEN DRYING LOW MOISTURE PRODUCTS, TO OBTAIN A COOL PRODUCT IT MAY BE NECESSARY TO ALSO ADJUST THE PLENUM TEMPERATURE DOWN.

   C. **CAUTION: HAVING THE FRESH AIR INTAKE PORTS CLOSED TOO FAR CAN DECREASE CAPACITY AND CAUSE EXCESSIVE HEAT WHICH COULD RESULT IN UNEVEN MOISTURE CONTENT OF DISCHARGE GRAIN AND IN EXTREME CONDITIONS, FIRES ON THE HEAT DECK.**

3. **ALL SWITCHES IN “OFF” POSITION**

4. **TURN “ON” MAIN POWER**

   A. MAIN POWER LIGHT WILL COME "ON".

5. **TURN “ON” PANEL POWER**

   A. MOVE POWER SWITCH TO "ON" POSITION. THIS WILL ENERGIZE PANEL POWER RELAY AND PROVIDE 120VAC TO CONTROL SYSTEM. SAFETY CIRCUIT MONITOR LIGHTS WILL COME "ON" AND SAFETY CIRCUIT LIGHT WILL COME "ON".

6. **TO FILL WITH WET GRAIN**

   A. MOVE LOAD SWITCH TO "ON" POSITION. LOADING SYSTEM WILL BE ACTIVATED AND WILL FILL DRYER. WHEN DRYER IS FULL OF GRAIN, HIGH GRAIN SHUTDOWN WILL SHUT OFF ALL LOADING EQUIPMENT AUTOMATICALLY. (LEAVE LOAD SWITCH IN "ON" POSITION.) GRAIN LOADING LIGHT WILL COME "ON" DURING FILLING - LOW GRAIN LIGHT WILL COME "ON" UNTIL DRYER IS FULL OF GRAIN THEN GO "OUT".

7. **TO START FAN(S)**

   A. MOVE FAN START SWITCH TO "ON" POSITION UNTIL ALL FAN(S) START. FAN PROVEN LIGHT(S) WILL COME "ON" AS FAN(S) PROVE. PURGING LIGHT WILL COME "ON" AFTER FAN(S) PROVE.

B. DRYERS WITH TWO (2) OR MORE FANS ARE EQUIPPED WITH DELAY TIMERS, WHICH ALLOW ONLY ONE(1) FAN TO START AT A TIME.

8. **TO START BURNER(S)**

A. TURN "ON" FUEL SUPPLY TO DRYER.

1. **NATURAL GAS** - "OPEN" MANUAL VALVE.

2. **LP GAS** - OPEN AT SUPPLY TANK. OPEN QUICK ACTING VALVE AND BALL VALVE ON DRYER.

DRYER MUST BE STARTED ON VAPOR UNTIL INTERNAL VAPORIZER IS WARM, THEN SWITCHED TO LIQUID. TANK MUST HAVE BOTH VAPOR AND LIQUID DRAW AVAILABLE TO DRYER.

B. WHEN BURNER READY LIGHT COMES "ON", A 60 SECOND PURGE CYCLE HAS BEEN COMPLETED.

C. MOVE BURNER SWITCH TO "ON" POSITION.

D. AFTER A SHORT DELAY, THE IGNITION FIRING LIGHT(S) WILL COME "ON" AND THE GAS SAFETY VALVES ARE ENERGIZED. (IF EQUIPPED WITH A MANUAL MAXON VALVE, THE HANDLE SHOULD ALWAYS BE BACK TOWARDS THE DRYER TO START. WHEN ENERGIZED, PULL THE HANDLE FORWARD UNTIL ‘OPEN’ IS INDICATED.)

E. WITHIN A FEW SECONDS THE BURNER PROVEN LIGHT(S) WILL COME "ON" SHOWING BURNER(S) HAVE PROVEN FLAME. AS BURNER PROVEN LIGHT(S) COME "ON" THE IGNITION FIRING LIGHT(S) WILL GO "OFF".

F. ADJUST FUEL PRESSURE

1. **NATURAL GAS** - 8# TO 10# NORMAL - 20 # MAXIMUM

2. **LP GAS** - 10# TO 12# NORMAL - 20 # MAXIMUM

G. ADJUST PLENUM SET POINT FOR DESIRED OPERATING TEMPERATURE.

(SEE FIGURE 4-A FOR PLENUM TEMPERATURES FOR VARIOUS CROPS.)

1. **TO INCREASE HEAT**, USE THE “UP” ARROW KEY OF THE TEMPERATURE CONTROLLER TO INCREASE THE SET POINT TO THE DESIRED OPERATING TEMPERATURE.

2. **TO DECREASE HEAT**, USE THE “DOWN” ARROW KEY OF THE TEMPERATURE CONTROLLER TO DECREASE THE SET POINT TO THE DESIRED OPERATING TEMPERATURE.

H. WHEN TEMPERATURE HAS REACHED DESIRED SET POINT IN PLENUM CHAMBER AND DRYER HAS HAD SUFFICIENT TIME TO WARM UP, "OPEN" LIQUID VALVE AT PROPANE TANK AND SHUT "OFF" VAPOR SUPPLY.

SUGGESTED PLENUM TEMPERATURES

BARLEY	120-140 F
CORN	190-210 F
FLAX	120-130 F
MILO	160-180 F
MUSTARD SEED	110-130 F
OATS	120-140 F
RICE	115-125 F
RYE	120-140 F
SOYBEANS	140-160 F
SUNFLOWER	120-130 F
WHEAT	160-180 F

FIGURE 4-A

NOTE: RECOMMENDED PLENUM HIGH LIMIT SETTING: 30 TO 50°F ABOVE PLENUM TEMPERATURE. MAXIMUM SETTING ALLOWED: 260°F

Watlow EZ-ZONE Automatic Temperature Controller

With Honeywell Modulating Motor and Maxon Butterfly Valve

Introduction

Your Delux grain dryer is equipped with an automatic temperature control system that is simple and takes the hassle out of continually watching the dryer for temperature fluctuations. Simply set your target plenum temperature and the controller will maintain that temperature. To better understand the controller and how to use it, please spend a little time to familiarize yourself with common keys and the display.

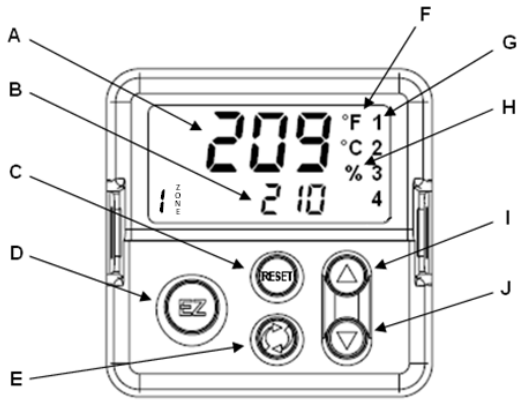

A) **Upper Display (Process Value)** – In the home page this is the current plenum temperature. Otherwise it is the upper display parameter in other menus.
B) **Lower Display (Set Point)** – In the home page this is the user-defined value that sets the desired operating temperature (plemum temperature). Use the "UP" & "DOWN" buttons (I & J) to increase or decrease the setpoint. Otherwise it is the lower display parameter in other menus.
C) **Reset Key** – This key is essentially a "BACKSPACE" key to any of the programming menus. Press and hold for two seconds to return to the Home Page. From the Home Page it can clear alarms and errors if clearable.
D) **EZ Key** – This key can be programmed to do a variety of functions. Shipped from factory (DELUX) this key has no programmed functions.
E) **Advance Key** – This key advances through parameter prompts.
F) **Temperature Units** – Indicates whether the temperature is displayed in Fahrenheit or Celsius.
G) **Output Activity** – Numbered LEDs indicate activity of outputs. *A flashing light indicates output activity and systems are normal*.
H) **Percent Units** – Lights when the controller is displaying values as a percentage or when the open-loop set point is displayed (manual mode).
I, J) **Up & Down Key** – In the Home Page, adjusts the set point in the lower display (B). In other menus, changes the upper display (A) to a higher or lower value, or changes a parameter selection.

*Note: ZONE 1 does not refer to anything relevant to dryer operation.

Linkage Connection

***** The motor is preset to 90° rotation. DO NOT ADJUST. If something has happened that has changed this setting, call Delux Mfg. Co. for instructions. *****

To connect the modulating motor and butterfly valve connecting linkage, follow the steps below closely: ***Errors in the linkage setup will cause temperature stability problems.***

1) The dryer ***should not*** be running during this procedure, but main panel power must be present and Panel Power Switch to 'ON' (center) position. This sends power to the motor.
2) The motor should now be in its furthest counter-clockwise position (closed). The motor crank should be at 45° upper right (1:30).
3) Hold the butterfly crank to the counterclockwise (closed) position. (The cranks should be parallel with each other.) Attach the connecting linkage into the toggle clamps on each crank as indicated in the illustration.

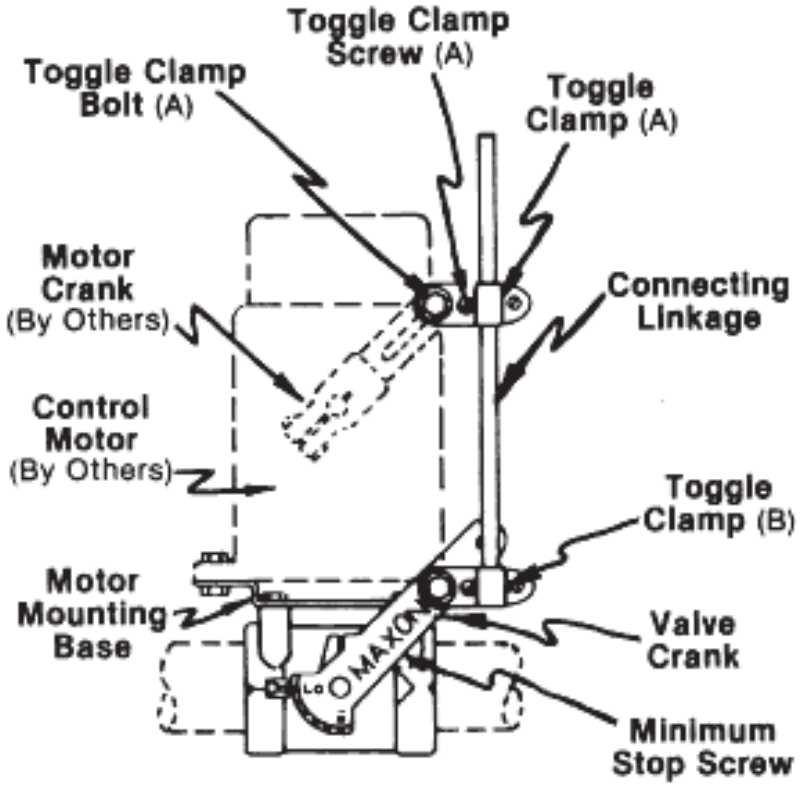

Initial Start-Up From Factory (Auto-Tuning)

THIS PROCEDURE **MUST** BE DONE DURING INITIAL START-UP FROM FACTORY

The temperature controller must be auto-tuned after shipping from the factory to the customer. Not performing the auto-tune may result in the plenum temperature becoming unstable during operation. To perform the auto-tune, follow the steps below:

1) Must have power & fuel to the dryer.
2) The dryer must be full of grain.
3) Adjust the target plenum temperature on the controller to 180 °F (60 °C).
4) Turn main panel power "ON".
5) Hold momentary fan switch "ON" until all fans have started.
6) Turn burner switch to "ON"
7) To start the auto-tuning process, press the advance (green) key 4 (four) times to reach the following screen:



8) Use the UP or DOWN key to change the upper display to "yes". Press the RESET key to return to the main screen. The controller will begin to flash "attn" in the lower display and "tun1" in the upper display, indicating that the auto-tuning is in progress.
9) The temperature will cycle both above and below the temperature setpoint (180 °F) to check the responsiveness of the system. This process may last several minutes. Once the controller has stopped flashing "attn" in the lower display and "tun1" in the upper display the auto-tuning process is complete *(Note: It is important that the controller is not disturbed until the process is complete)*. The temperature should increase slowly up to the setpoint (180 °F) and become stable (as long as the temperature seems stable, you may now adjust the set point to the desired drying temperature).
10) At this time the modulating motor (located on the valve train to the left of the panel box) should be moving in small increments, advancing slowly to the target plenum temperature.
11) Give the system ample time to zero in on the desired plenum temperature (minimum of 20 minutes).
12) It may be necessary to repeat the process with changing variables outside the system, but not needed every time starting the dryer.

Micro-Tuning

From the factory, this mode is enabled. By enabling this, it allows the controller to constantly change its parameters that control the stability of the temperature system.

For example: A change in gas pressure can reduce the stability of the system, but by having this enabled it can change its calculations accordingly to compensate for the difference.

To change this parameter:
With main panel power “ON”, press the ADVANCE (green) key 5 times to reach the following screen:



This Is Factory Default

Use the UP or DOWN key to change the upper display to “No”. Press the RESET key to return to exit and return to the main screen.

“No” - feature disabled
“yes” - feature enabled

Minimum Flame Adjustment

The minimum flame adjustment is programmed from the factory, and under normal circumstances should not have to be adjusted.

1) Hold the UP or DOWN arrow keys together for 6 seconds. "a1" should be in upper display and "set" in lower display.
2) Press the DOWN arrow key 3 times. "otpt" should be in upper display and "set" in lower display.
3) Press the ADVANCE (green) key 5 times. "4.75" should be in upper display and "s.lo" in lower display.
4) Use the UP or DOWN arrow keys to adjust the upper display parameter from "4.75" (factory default) Scale: 4.00-MIN - 8.00-MAX. ***Do not go above or below this scale, even if it allows you to do so.***

High Limit

The controller is equipped with an integrated high limit control. Should the operating temperature rise above the high limit set point, the dryer will shut down automatically.
To change the high limit temperature set point:

1) From the Home Page press the ADVANCE (green) key 6 times. "250" (factory default) should appear in the upper display and "sp.5i" in the lower display.
2) Use the UP or DOWN key to adjust the high limit set point.
3) Hold the RESET key until you return to the Home Page.

If under normal operation, the high limit set point is reached the dryer will shut down, and prevent the dryer from being restarted until the dryer has had sufficient time to cool down. Reset the panel power after the dryer has had time to cool to clear high limit error. Error message: "li.h1" in the upper display and "attn" in the lower display.

The integrated system has its own sensor that monitors the temperature inside the plenum, separate from the sensor that controls the actual temperature. However these sensors are located in the same junction box. Should the high limit sensor fail, it will automatically shut control circuit power to the dryer and prevent it from being started until the problem with the high limit sensor is fixed. Error messages: "li.e1" ; "er.i 2" in the upper display and "attn" in the lower display.

If the temperature control sensor fails, the system is designed to flash a warning message that indicates that there is a sensor error. The dryer will still operate under this condition, but it is advised the temperature control sensor be fixed. Error message: "er.i1" in the upper display and "attn" in the lower display

Alarm, Limit, Indication & Error Messages

Indication	Description	Possible Cause(s)	Corrective Action
Alarm won't clear or reset	Alarm will not clear or reset with keypad or digital input	• Alarm latching is active • Alarm set to incorrect output • Alarm is set to incorrect source • Sensor input is out of alarm set point range • Alarm set point is incorrect • Alarm is set to incorrect type • Digital input function is incorrect	• Reset alarm when process is within range or disable latching • Set output to correct alarm source instance • Set alarm source to correct input instance • Correct cause of sensor input out of alarm range • Set alarm set point to correct trip point • Set alarm to correct type: process, deviation or power • Set digital input function and source instance
Alarm won't occur	Alarm will not activate output	• Alarm silencing is active • Alarm blocking is active • Alarm is set to incorrect output • Alarm is set to incorrect source • Alarm set point is incorrect • Alarm is set to incorrect type	• Disable alarm silencing, if required • Disable alarm blocking, if required • Set output to correct alarm source instance • Set alarm source to correct input instance • Set alarm set point to correct trip point • Set alarm to correct type: process, deviation or power
AlE1 Alarm Error AlE2 AlE3 AlE4	Alarm state cannot be determined due to lack of sensor input	• Sensor improperly wired or open • Incorrect setting of sensor type • Calibration corrupt	• Correct wiring or replace sensor • Match setting to sensor used • Check calibration of controller
AlL1 Alarm Low AlL2 AlL3 AlL4	Sensor input below low alarm set point	• Temperature is less than alarm set point • Alarm is set to latching and an alarm occurred in the past • Incorrect alarm set point • Incorrect alarm source	• Check cause of under temperature • Clear latched alarm • Establish correct alarm set point • Set alarm source to proper setting
AlH1 Alarm High AlH2 AlH3 AlH4	Sensor input above high alarm set point	• Temperature is greater than alarm set point • Alarm is set to latching and an alarm occurred in the past • Incorrect alarm set point • Incorrect alarm source	• Check cause of over temperature • Clear latched alarm • Establish correct alarm set point • Set alarm source to proper setting
Er.i1 Error Input Er.i2	Sensor does not provide a valid signal to controller	• Sensor improperly wired or open • Incorrect setting of sensor type • Calibration corrupt	• Correct wiring or replace sensor • Match setting to sensor used • Check calibration of controller
Limit won't clear or reset	Limit will not clear or reset with keypad or digital input	• Sensor input is out of limit set point range • Limit set point is incorrect • Digital input function is incorrect	• Correct cause of sensor input out of limit range • Set limit set point to correct trip point • Set digital input function and source instance
LiE1 Limit Error	Limit state cannot be determined due to lack of sensor input, limit will trip	• Sensor improperly wired or open • Incorrect setting of sensor type • Calibration corrupt	• Correct wiring or replace sensor • Match setting to sensor used • Check calibration of controller
LiL1 Limit Low	Sensor input below low limit set point	• Temperature is less than limit set point • Limit outputs latch and require reset • Incorrect alarm set point	• Check cause of under temperature • Clear limit • Establish correct limit set point

Indication	Description	Possible Cause(s)	Corrective Action
LiH1 Limit High	Sensor input above high limit set point	• Temperature is greater than limit set point • Limit outputs latch and require reset • Incorrect alarm set point	• Check cause of over temperature • Clear limit • Establish correct limit set point
LPo1 LPo2 Loop Open Error	Open Loop Detect is active and the process value did not deviate by a user-selected value in a user specified period with PID power at 100%.	• Setting of Open Loop Detect Time incorrect • Setting of Open Loop Detect Deviation incorrect • Thermal loop is open • Open Loop Detect function not required but activated	• Set correct Open Loop Detect Time for application • Set correct Open Loop Deviation value for application • Determine cause of open thermal loop: misplaced sensors, load failure, loss of power to load, etc. • Deactivate Open Loop Detect feature
LPr1 LPr2 Loop Reversed Error	Open Loop Detect is active and the process value is headed in the wrong direction when the output is activated based on deviation value and user-selected value.	• Setting of Open Loop Detect Time incorrect • Setting of Open Loop Detect Deviation incorrect • Output programmed for incorrect function • Thermocouple sensor wired in reverse polarity	• Set correct Open Loop Detect Time for application • Set correct Open Loop Deviation value for application • Set output function correctly • Wire thermocouple correctly, (red wire is negative)
rP1 Ramping 1 rP2 Ramping 2	Controller is ramping to new set point	• Ramping feature is activated	• Disable ramping feature if not required
tUn1 Autotuning 1 tUn2 Autotuning 2	Controller is autotuning the control loop	• User started the autotune function • Digital input is set to start autotune	• Wait until autotune completes or disable autotune feature • Set digital input to function other than autotune, if desired
No heat/cool action	Output does not activate load	• Output function is incorrectly set • Control mode is incorrectly set • Output is incorrectly wired • Load, power or fuse is open • Control set point is incorrect • Incorrect controller model for application	• Set output function correctly • Set control mode appropriately (Open vs Closed Loop) • Correct output wiring • Correct fault in system • Set control set point in appropriate control mode and check source of set point: remote, idle, profile, closed loop, open loop • Obtain correct controller model for application
No Display	No display indication or LED illumination	• Power to controller is off • Fuse open • Breaker tripped • Safety interlock switch open • Separate system limit control activated • Wiring error • Incorrect voltage to controller	• Turn on power • Replace fuse • Reset breaker • Close interlock switch • Reset limit • Correct wiring issue • Apply correct voltage, check part number
No Serial Communication	Cannot establish serial communications with the controller	• Address parameter incorrect • Incorrect protocol selected • Baud rate incorrect • Parity incorrect • Wiring error • EIA-485 converter issue • Incorrect computer or PLC communications port • Incorrect software setup • Wires routed with power cables • Termination resistor may be required	• Set unique addresses on network • Match protocol between devices • Match baud rate between devices • Match parity between devices • Correct wiring issue • Check settings or replace converter • Set correct communication port • Correct software setup to match controller • Route communications wires away from power wires • Place 120 Ω resistor across EIA-485 on last controller

Indication	Description	Possible Cause(s)	Corrective Action
Process doesn't control to set point	Process is unstable or never reaches set point	• Controller not tuned correctly	• Perform autotune or manually tune system
		• Control mode is incorrectly set	• Set control mode appropriately (Open vs Closed Loop)
		• Control set point is incorrect	• Set control set point in appropriate control mode and check source of set point: remote, idle, profile, closed loop, open loop
Temperature runway	Process value continues to increase or decrease past set point.	• Controller output incorrectly programmed	• Verify output function is correct (heat or cool)
		• Thermocouple reverse wired	• Correct sensor wiring (red wire negative)
		• Controller output wired incorrectly	• Verify and correct wiring
		• Short in heater	• Replace heater
		• Power controller connection to controller defective	• Replace or repair power controller
		• Controller output defective	• Replace or repair controller
[100] Device Error [rEtn]	Controller displays internal malfunction message at power up.	• Controller defective • Sensor input over driven	• Replace or repair controller
[hEr] Heater Error	Heater Error	• Current through load is above current trip set point	• Check that the load current is proper. Correct cause of overcurrent and/or ensure current trip set point is correct.
		• Current through load is below current trip set point	• Check that the load current is proper. Correct cause of undercurrent and/or ensure current trip set point is correct.
[CEr] Current Error	Load current incorrect.	• Shorted solid-state or mechanical relay	• Replace relay
		• Open solid-state or mechanical relay	• Replace relay
		• Current transformer load wire associated to wrong output	• Route load wire through current transformer from correct output, and go to the [CS.1] Source Output Instance parameter (Setup Page, Current Menu) to select the output that is driving the load.
		• Defective current transformer or controller	• Replace or repair sensor or controller
		• Noisy electrical lines	• Route wires appropriately, check for loose connections, add line filters
Menus inaccessible	Unable to access [SEt], [OPEr], [FCty] or [ProF] menus or particular prompts in Home Page	• Security set to incorrect level	• Check [LoC] settings in Factory Page • Enter appropriate password in [ULoC] setting in Factory Page
		• Digital input set to lockout keypad	• Change state of digital input
		• Custom parameters incorrect	• Change custom parameters in Factory Page
EZ-Key/s don't work	EZ-Key/s does not activate required function	• EZ-Key function incorrect	• Verify EZ-Key function in Setup Menu
		• EZ-Key function instance not incorrect	• Check that the function instance is correct
		• Keypad malfunction	• Replace or repair controller

Clearing Errors & Limit Messages

To clear error or limit messages press the RESET key. You may also turn main panel power “OFF” and back “ON” again. Error or Limit messages will not clear until the cause or reason for the error has been addressed.

Watlow EZ-ZONE Temperature Controller / High Limit - Config. Record

Setup Page



To reach the Setup page hold the "up" and "down" arrow keys together for **6 seconds**.

Menu	Instance	Parameter	Factory Setting	DELUX Setting	Parameter Description
A1	1				**Analog Input 1 (PID)**
		SEn	tC	r0.1H	Selects the type of sensor used
		rtL	2	3	Selects the leads in sensor
		FiL	0.5	3	Filters erratic signal, for smoother PID calculations
		iEr	oFF	on	Forces manual clear of input errrors
		dEC	0	0	Selects precision of displayed units
		S.bA	oFF	on	Enables or disables sensor backup
A1	2				**Analog Input 2 (High Limit)**
		SEn	tC	r0.1H	Selects the type of sensor used
		rtL	2	3	Selects the leads in sensor
		FiL	0.5	3	Filters erratic signal, for smoother PID calculations
		iEr	oFF	on	Forces manual clear of input errrors
		dEC	0	0	Selects precision of displayed units
LIM					**Limit Function**
		L.Sd	both	h19h	Selects which instance limit function will trip
		L.hY	3	20	Defines the high limit hystersis band
		SP.Lh	9999	260	Defines the upper range of the high limit set point
		SP.LL	-1999	0	Defines the lower range of the high limit set point
		L.it	no	YES	Selects whether output and autotune are terminated when in limit state
LooP	1				**PID Loop 1**
		h.Ag	Pid	Pid	Selects the heat control method
		C.Ag	oFF	oFF	Selects the cool control method
		t.tUn	no	YES	Enables or disable TRU-TUNE+ adaptive tune automatically
		t.Agr	Crit	Crit	Selects the aggressiveness of the autotune funtion
		UFA	USEr	USEr	Selects what output will do when user switches to manual mode
		FAiL	USEr	oFF	Selects what ouput will do when an input error switches control to manual mode
		L.dE	no	no	Enables or disables open-loop detction feature to monitor closed-loop operations
		rP	oFF	oFF	Selects when controller will ramp to setpoint
		L.SP	-1999	50	Defines the lower range of the PID setpoint (temperature in automatic mode)
		h.SP	9999	250	Defines the upper range of the PID setpoint (temperature in automatic mode)
		SP.Lo	-100	0	Defines the lower range of the PID setpoint (% output in manual mode)
		SP.hi	100	100	Defines the upper range of the PID setpoint (% output in manual mode)
otPt	1				**Output 1**
		o.tY	voLt	MA	Selects the type of output
		Fn	hEAt	hEAt	Selects which function will drive output
		Fi	1	1	Selects the instance of the function selected above
		S.Lo	0.00	4.75	Defines the lower range of the scale for the universal process output
		S.hi	10.00	20.00	Defines the upper range of the scale for the universal process output
		o.Lo	0	0	Defines the low power scale, output will never be less than the value specified
		o.hi	100	100	Defines the high power scale, output will never be less than the value specified
		o.CA	0.0	0.0	Defines an offset value to the process output
	3				**Output 3**
		Fn	oFF	oFF	Selects which function will drive output
	4				**Output 4**
		Fn	LIM	LIM	Selects which function will drive output
ALM	1				**Alarm 1**
		A.tY	oFF	oFF	Selects whether the alarm trigger is a fixed value or will track set point
	2				**Alarm 2**
		A.tY	oFF	oFF	Selects whether the alarm trigger is a fixed value or will track set point

Menu	Instance	Parameter	Factory Setting	DELUX Setting	Parameter Description
	3				**Alarm 3**
		AtY	oFF	oFF	Selects whether the alarm trigger is a fixed value or will track set point
	4				**Alarm 4**
		AtY	oFF	oFF	Selects whether the alarm trigger is a fixed value or will track set point
FUn					**Function**
		LEu	high	high	Selects the state in which the EZ key is in when powered up
		Fn	nonE	nonE	Selects the funtion of the EZ key
		F1	0	0	Selects which instance the EZ key will affect
GLbL					**Global**
		C_F	F	F	Selects the unit of measurement
		AC.LF	60	60	Selects the AC line frequency
CoM1					**Communications**
		Ad.S	1	1	Sets the network address of this controller
		C_F	F	F	Selects UOM in which this communications channel will display
		nU.S	YES	YES	Determines whether all values written to control will be saved in EEPROM

Watlow EZ-ZONE Temperature Controller / High Limit - Config. Record

Operations Page



To reach the Operations page hold the "up" and "down" arrow keys together for **3 seconds**.

Menu	Instance	Parameter	Factory Setting	DELUX Setting	Parameter Description
A1	1				**Analog Input 1 (PID)**
		AIn	**	**	View the process value
		iEr	**	**	View the cause of the most recent error
		iCA	0	0	Defines calibration offset
	2				**Analog Input 2 (High Limit)**
		AIn	**	**	View the process value
		iEr	**	**	View the cause of the most recent error
		iCA	0	0	Defines calibration offset
LIM					**Limit**
		LhS	100	260	Defines the high process value that will trigger the limit
Mon					**Monitor**
		CMdA	**	**	View the active control mode
		hPr	**	**	View the current heat output level
		CSP	**	**	View the set point currently in effect
		PuA	**	**	View the current filtered process value using the control input
LooP					**Loop**
		CMd	AUto	AUto	Selects the method that this loop will use to control
		AtSP	90	90	Defines the the setpoint autotune will use as % of current setpoint
		AUt	no	no	Initiates the autotune process
		CSP	75	100	Defines the setpoint the controller will use in PID funtion
		idS	75	100	Defines a new PID setpoint if high limit is reached
		hPb	25	*35	Defines the proportianl band for the heat output
		ti	180	*56	Defines the PID intergral for the output
		td	0	*9	Defines the PID derivative time for the output
		db	0	0	Defines the offset to the proportional band
		oSP	0	0	Defines a fixed level of output power when in manual mode
ALM	1				**Alarm 1**
		ALo	32.0	32.0	Defines the low range of alarm instance
		Ahi	300.0	300.0	Defines the high range of the alarm instance
	2				**Alarm 2**
		ALo	32.0	32.0	Defines the low range of alarm instance
		Ahi	300.0	300.0	Defines the high range of the alarm instance
	3				**Alarm 3**
		ALo	32.0	32.0	Defines the low range of alarm instance
		Ahi	300.0	300.0	Defines the high range of the alarm instance
	4				**Alarm 4**
		ALo	32.0	32.0	Defines the low range of alarm instance
		Ahi	300.0	300.0	Defines the high range of the alarm instance

Watlow EZ-ZONE Temperature Controller / High Limit - Config. Record

Factory Page



To reach the Factory page hold the "RESET" and "Advance" arrow keys together for **6 seconds**.

Menu	Instance	Parameter	Factory Setting	DELUX Setting	Parameter Description
CUSt	1				**Custom 1**
		PAr	AC.Pu	AC.Pu	Defines custom parameter to home page
	2				**Custom 2**
		PAr	AC.SP	AC.SP	Defines custom parameter to home page
	3				**Custom 3**
		PAr	Pro	Pro	Defines custom parameter to home page
	4				**Custom 4**
		PAr	L.St	L.St	Defines custom parameter to home page
	5				**Custom 5**
		PAr	CM7	CM7	Defines custom parameter to home page
	6				**Custom 6**
		PAr	hPr	hPr	Defines custom parameter to home page
	7				**Custom 7**
		PAr	CPr	AUt	Defines custom parameter to home page
	8				**Custom 8**
		PAr	AUt	Lh.S	Defines custom parameter to home page
	9				**Custom 9**
		PAr	idLE	nonE	Defines custom parameter to home page
	10				**Custom 10**
		PAr	CM7	nonE	Defines custom parameter to home page
	11				**Custom 11**
		PAr	hPr	nonE	Defines custom parameter to home page
	12				**Custom 12**
		PAr	CPr	nonE	Defines custom parameter to home page
	13				**Custom 13**
		PAr	AUt	nonE	Defines custom parameter to home page
	14				**Custom 14**
		PAr	idLE	nonE	Defines custom parameter to home page
	15				**Custom 15**
		PAr	LL.S	nonE	Defines custom parameter to home page
	16				**Custom 16**
		PAr	Lh.S	nonE	Defines custom parameter to home page
	17				**Custom 17**
		PAr	nonE	nonE	Defines custom parameter to home page
	18				**Custom 18**
		PAr	nonE	nonE	Defines custom parameter to home page
	19				**Custom 19**
		PAr	nonE	nonE	Defines custom parameter to home page
	20				**Custom 20**
		PAr	nonE	nonE	Defines custom parameter to home page
LoC					**Lock**
		LoC.o	2	2	Changes the security level of the operations page
		PASS.E	oFF	oFF	Enables or disables security features
		rLoC	5	5	Sets the read security clearance level
		SLoc	5	5	Sets the write security clearance level
d IAG					
		Pn	**	**	Part number of device
		rEv	**	**	Software revision number
		SbLd	**	**	Software build number

Menu	Instance	Parameter	Factory Setting	DELUX Setting	Parameter Description
		Sn	**	**	Serial number of device
		dAtE	**	**	Date of manufacture
		USr.r	nonE	nonE	Restore user/default settings
		USr.S	nonE	nonE	Save current user settings
		C.LEd	both	both	Turns communications LED on or off for selected ports
		ZonE	on	on	Turns zone LED on or off based on selection
		chAn	on	on	Turns channel LED on or off based on selection
		dPrS	2	2	Defines the number of display pairs
CAL	1				**Calibration**
		rAw	**	**	View the raw electrical value for this input in units of sensor
		EL.Lo	1.000	1.000	Defines the value to calibrate the low end of the input range
		ELo.o	0.00	0.00	Defines the value to calibrate the low end of the output range
		ELo.S	1.000	1.000	Defines the value to calibrate the slope of the output value
	2				
		rAw	**	**	View the raw electrical value for this input in units of sensor
		EL.Lo	1.000	1.000	Defines the value to calibrate the low end of the input range
		ELo.o	0.00	0.00	Defines the value to calibrate the low end of the output range
		ELo.S	1.000	1.000	Defines the value to calibrate the slope of the output value

Watlow EZ-ZONE Automatic Moisture Controller

Introduction

Your Delux grain dryer is equipped with an automatic moisture control system that is simple and takes the hassle out of continually monitoring incoming grain for changes in moisture. To better understand the controller and how to use it, please spend a little time to familiarize yourself with common keys and the display.

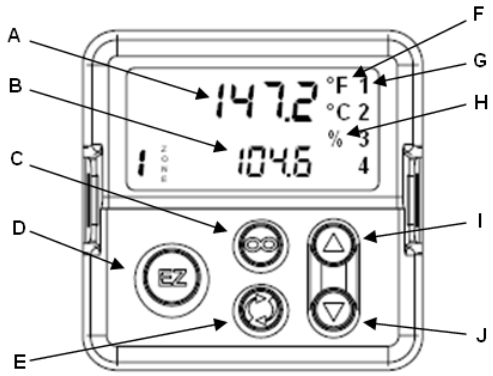

A) **Upper Display (Process Value)** – In the home page this is the current air temperature passing through the grain column (changes with fluctuations in grain moisture). Otherwise it is the upper display parameter in other menus.
B) **Lower Display (Set Point)** – This number will change when the user is adjusting the voltage on the voltmeter (using the UP or DOWN arrow keys) to match the output (DC voltage) that was present in the calibration (manual) mode.
C) **Infinity Key** – This key is essentially a "BACKSPACE" key to any of the programming menus. Press and hold for two seconds to return to the Home Page. From the Home Page it can clear alarms and errors if clearable.
D) **EZ Key** – This key can be programmed to do a variety of functions. Shipped from factory (DELUX) this key has no programmed functions.
E) **Advance Key** – This key advances through parameter prompts.
F) **Temperature Units** – Indicates whether the temperature is displayed in Fahrenheit or Celsius.
G) **Output Activity** – Numbered LEDs indicate activity of outputs. *A flashing light indicates output activity and systems are normal*.
H) **Percent Units** – Lights when the controller is displaying values as a percentage or when the open-loop set point is displayed (manual mode).
I,J) **Up & Down Key** – In the Home Page, adjusts the set point in the lower display (B). In other menus, changes the upper display (A) to a higher or lower value, or changes a parameter selection.

*Note: ZONE 1 does not refer to anything relevant to dryer operation.

Automatic Moisture Set-Up Guide

1) On initial start-up with wet grain, it is advisable to let the dryter run at operating temperature for 10-20 minutes before starting the discharge process.
2) Move unload switch to "ON" position (grain unloading light will come on) to start discharge auger system. *Note: Metering rolls will not operate unless all auger systems are on.*
3) Move metering selector switch to "MANUAL" position and adjust the manual metering control potentiometer for desired discharge rate (see formula & charts below for determining initial unloading rate)

    a. **Metering Roll Adjustment**
    The dry grain discharge rate is adjusted by rotating the manual metering control potentiometer. This is located on the control panel.
    Clockwise – Will increase the grain discharge rate & DC volts
    Counter-Clockwise – Will decrease the grain discharge rate & DC volts

4) **Wait at least one (1) hour** – until a complete cycle of grain through the dryer has been completed. One cycle consists from the time the grain enters the top of the dryer to the time it is discharge from the metering rolls, and the dryer has stabilized. Then check grain moisture. *Note: With wetter grain it may be necessary to wait longer to check samples.*
5) **If grain is too wet, decrease** manual metering control potentiometer (decrease DC voltage) and repeat step 4, allowing grain to stabilize.
6) **If grain is too dry, increase** manual metering control potentiometer (increase DC voltage) and repeat step 4, allowing grain to stabilize.
7) Repeat the steps above until final moisture content has been established and dryer has completely stabilize
8) With the moisture now stabilized in manual mode, **note the voltage present on the DC voltmeter.**
9) Switch the metering selector switch from MANUAL to AUTOMATIC. This gives control of the system to the automatic metering controller.

    a. There is an automatic/manual mode within the controller itself. This is always left in the automatic mode. All automatic /manual switching that is referred to in these instructions is the metering selector switch and **not** the controller.

10) **Set the voltage on the DC voltmeter to match what it was in manual mode.** Using the UP or DOWN arrow keys on the controller; change the set point on the controller to a number lower than the current temperature reading to bring it into operating range. Then ignore the temperature readings on the controller and watch the voltage readings on the DC voltmeter only.

a. UP arrow key – Decreases DC voltage
b. DOWN arrow key – Increases DC voltage

11) Adjust slowly so that the drive has time to react. DC voltage will not change until the UP or DOWN key is released.
12) If final moisture content is within 1 or 2 points of target moisture, minor adjustments can be made while in automatic mode. Be cautious not to make too much change too often. Let the system have ample time to process and adjust. If the variance is too great or not consistent, it may be necessary to return to manual mode and establish a new set point.
13) Proportional Band (h.pb) – The proportional band is factory set for each model of dryer. It can be changed by pressing the ADVANCE key until reaching "h.pb" in the lower display. It can be adjusted up or down depending on what the moisture of the discharged grain is doing.

    a. **Decrease** PB if it seems the dryer isn't reacting quickly enough to changes in incoming grain moisture.
    b. **Increase** PB if it seems the dryer is reacting too quickly to changes in incoming grain moisture.
    Note: it is the moisture of your discharging grain over a period of time that is important. Do not make changes too soon because the system appears to be changing speeds too quickly. Sometimes it takes aggressive action to maintain the desired results.

14) Moisture samples should be taken at regular intervals. At this time, a visual inspection of the dryer should be made, checking the temperature and feedroll operation. Make sure all columns are flowing by observing grain flow on each side.
15) For further information regarding the automatic metering system refer to Section 9, Sequence 7B.

GRAIN DRYER PERFORMANCE CHART
CHART # 1

DRYING CAPACITY WET
BPH PER 1000 BPH-RATED
CAPACITY ON YELLOW CORN

	MOISTURE OF DRIED GRAIN %								
IN	**10**	**11**	**12**	**13**	**14**	**15**	**16**	**17**	**18**
13	870	1200	1900	-	-	-	-	-	-
14	740	930	1250	-	-	-	-	-	-
15	640	780	1000	1550	-	-	-	-	-
16	550	690	850	1200	1900	-	-	-	-
17	500	600	730	960	1400	-	-	-	-
18	450	530	650	800	1100	1600	-	-	-
19	410	480	570	710	910	1250	1800	-	-
20	380	440	510	630	770	1000	1350	1900	-
21	360	410	480	560	690	880	1100	1450	1900
22	340	380	440	510	620	760	920	1150	1450
23	320	360	410	470	560	680	800	1000	1200
24	300	340	390	440	510	610	720	850	1000
25	-	320	370	410	480	560	640	740	870
26	-	-	350	390	440	510	590	670	770
27	-	-	340	370	420	480	540	610	700
28	-	-	320	360	400	450	500	570	630
29	-	-	-	350	390	430	480	530	590
30	-	-	-	340	380	420	460	510	560

PLENUM TEMP	**F2**	**WET GRAIN TEMP**	**F3**	**GRAIN**	**F4**
140 F	.46	20 F	.74	CORN	1.0
150 F	.50	30 F	.78	SOYBEANS	1.0
160 F	.55	40 F	.82	MILO	.9
170 F	.61	50 F	.86	WHEAT	.8
180 F	.69	60 F	.91		
190 F	.77	70 F	1.00		
200 F	.88				
210 F	1.00				

HOW TO USE CHARTS TO FIGURE YOUR CAPACITY

$$\frac{\text{(DRYER RATED CAPACITY @ 20-15\%)}}{1000} \times \text{(BPH IN CHART 1) X F2 X F3 X F4}$$

DRY GRAIN UNLOADING RATE – DP AND DPSL SERIES DRYERS

D.C. VOLTS = DRY UNLOAD RATE PER HOUR

MODEL:		10FT.	15FT.	20FT.	25FT.	30FT.	40FT.
D.C. VOLTS	RPM	DRY BU/HR	DRY BU/HR	DRY BU/HR	DRY BU/HR	DRY BU/HR	DRY BU/HR
10.0	1.22	64.15	96.23	128.30	160.38	192.46	256.61
11.0	1.34	70.57	105.85	141.13	176.42	211.71	282.27
12.0	1.46	76.98	115.47	153.96	192.46	230.95	307.93
13.0	1.58	83.40	125.10	166.80	208.49	250.20	333.59
14.0	1.70	89.81	134.72	179.63	224.53	269.44	359.25
15.0	1.82	96.23	144.34	192.46	240.57	288.69	384.91
16.0	1.94	102.64	153.96	205.29	256.61	307.93	410.57
17.0	2.07	109.06	163.59	218.12	272.65	327.18	436.23
18.0	2.19	115.47	173.21	230.95	288.68	346.42	461.89
19.0	2.31	121.89	182.83	243.78	304.72	365.67	487.56
20.0	2.43	128.30	192.46	256.61	320.76	384.92	513.22
21.0	2.55	134.72	202.08	269.44	336.80	404.16	538.88
22.0	2.67	141.13	211.70	282.27	352.84	423.41	564.54
23.0	2.79	147.55	221.32	295.10	368.87	442.65	590.20
24.0	2.92	153.96	230.95	307.93	384.91	461.90	615.86
25.0	3.04	160.38	240.57	320.76	400.95	481.14	641.52
26.0	3.16	166.80	250.19	333.59	416.99	500.39	667.18
27.0	3.28	173.21	259.82	346.42	433.03	519.64	692.84
28.0	3.40	179.63	269.44	359.25	449.06	538.88	718.55
29.0	3.52	186.04	279.06	372.08	465.10	558.13	744.16
30.0	3.65	192.46	288.68	384.91	481.14	577.37	769.82
31.0	3.77	198.87	298.31	397.74	497.18	596.62	795.48
32.0	3.89	205.29	307.93	410.57	513.22	615.86	821.15
33.0	4.01	211.70	317.55	423.40	529.25	635.11	846.81
34.0	4.13	218.12	324.18	436.23	545.29	654.35	872.47
35.0	4.25	224.53	336.80	449.06	561.33	673.60	898.13
36.0	4.37	230.95	346.42	461.89	577.37	692.85	923.79
37.0	4.50	237.36	356.04	474.72	593.41	712.09	949.45
38.0	4.62	243.78	365.67	487.56	609.44	731.34	975.11
39.0	4.74	250.19	375.29	500.39	625.48	750.58	1000.77
40.0	4.86	256.61	384.91	513.22	641.52	769.83	1026.43

DRY GRAIN UNLOADING RATE – DP AND DPSL SERIES DRYERS

D.C. VOLTS = DRY UNLOAD RATE PER HOUR

MODEL:		10FT.	15FT.	20FT.	25FT.	30FT.	40FT.
D.C. VOLTS	RPM	DRY BU/HR	DRY BU/HR	DRY BU/HR	DRY BU/HR	DRY BU/HR	DRY BU/HR
41.0	4.98	263.02	394.53	526.05	657.56	789.07	1052.09
42.0	5.10	269.44	404.16	538.88	673.60	808.32	1077.75
43.0	5.22	275.85	413.78	551.71	689.63	827.56	1103.41
44.0	5.35	282.27	423.40	564.54	705.67	846.81	1129.08
45.0	5.47	288.68	433.03	577.37	721.71	866.06	1154.74
46.0	5.59	295.10	442.65	590.20	737.75	885.30	1180.40
47.0	5.71	301.51	452.27	603.03	753.79	904.55	1206.06
48.0	5.83	307.93	461.89	615.86	769.82	923.79	1231.72
49.0	5.95	314.34	471.52	628.69	785.86	943.04	1257.38
50.0	6.08	320.76	481.14	641.52	801.90	962.28	1283.04
51.0	6.20	327.18	490.76	654.35	817.94	981.53	1308.70
52.0	6.32	333.59	500.39	667.18	833.98	1000.78	1334.36
53.0	6.44	340.01	510.01	680.01	850.01	1020.02	1360.02
54.0	6.56	346.42	519.63	692.84	866.05	1039.27	1385.68
55.0	6.68	352.84	529.25	705.67	882.09	1058.51	1411.34
56.0	6.80	359.25	538.88	718.50	898.13	1077.76	1437.00
57.0	6.93	365.67	548.50	731.33	914.17	1097.00	1462.67
58.0	7.05	372.08	558.12	744.16	930.20	1116.25	1488.83
59.0	7.17	378.50	567.75	756.99	946.24	1135.49	1513.99
60.0	7.29	384.91	577.37	769.82	962.28	1154.74	1539.65
61.0	7.41	391.33	586.99	782.65	978.32	1173.99	1565.31
62.0	7.53	397.74	596.61	795.48	994.36	1193.23	1590.97
63.0	7.65	404.16	606.24	808.32	1010.39	1212.48	1616.63
64.0	7.78	410.57	615.86	821.15	1026.43	1231.72	1642.29
65.0	7.90	416.99	625.48	833.98	1042.47	1250.97	1667.95
66.0	8.02	423.40	635.10	846.81	1058.51	1270.21	1693.61
67.0	8.14	429.82	644.73	859.64	1074.55	1289.46	1719.27
68.0	8.26	436.23	654.35	872.47	1090.58	1308.75	1744.93
69.0	8.38	442.65	663.97	885.30	1106.62	1327.95	1770.60
70.0	8.51	449.06	673.60	898.13	1122.66	1347.20	1796.26

DRY GRAIN UNLOADING RATE – DP AND DPSL SERIES DRYERS

D.C. VOLTS = DRY UNLOAD RATE PER HOUR

MODEL:		10FT.	15FT.	20FT.	25FT.	30FT.	40FT.
D.C. VOLTS	RPM	DRY BU/HR	DRY BU/HR	DRY BU/HR	DRY BU/HR	DRY BU/HR	DRY BU/HR
71.0	8.63	455.48	683.22	910.96	1138.70	1366.44	1821.92
72.0	8.75	461.89	692.84	923.79	1154.74	1385.69	1847.58
73.0	8.87	468.31	702.46	936.62	1170.77	1404.93	1873.24
74.0	8.99	474.72	712.09	949.45	1186.81	1424.18	1898.90
75.0	9.11	481.14	721.71	962.28	1202.85	1443.42	1924.56
76.0	9.23	487.56	731.33	975.11	1218.89	1462.67	1950.22
77.0	9.36	493.97	740.96	987.94	1234.93	1481.92	1975.88
78.0	9.48	500.39	750.58	1000.77	1250.96	1501.16	2001.54
79.0	9.60	506.80	760.20	1013.60	1267.00	1520.41	2027.20
80.0	9.72	513.22	769.82	1026.43	1283.04	1539.65	2052.86
81.0	9.84	519.63	779.45	1039.26	1299.08	1558.90	2078.52
82.0	9.96	526.05	789.07	1052.09	1315.12	1578.14	2104.19
83.0	10.08	532.46	798.69	1064.92	1331.15	1597.39	2129.85
84.0	10.21	538.88	808.32	1077.75	1347.19	1616.63	2155.51
85.0	10.33	545.29	817.97	1090.58	1363.23	1635.88	2181.17
86.0	10.45	551.71	827.56	1103.41	1379.27	1655.13	2206.83
87.0	10.57	558.12	837.18	1116.24	1395.31	1674.37	2232.49
88.0	10.69	564.54	846.81	1129.08	1411.34	1693.62	2258.15
89.0	10.81	570.95	856.43	1141.91	1427.38	1712.86	2283.81
90.0	10.94	577.37	866.05	1154.74	1443.42	1732.11	2309.47

SPECIAL CHART: DRIVE SPROCKET: 4012 DRIVEN SPROCKET: 4032

MODEL	VOLT	(=)	RPM	DRY BU. / MIN.	DRY BU. / HR
10 FT.	1	(=)	.1215	.1069	6.4150
15 FT.	1	(=)	.1215	.1604	9.6230
20 FT.	1	(=)	.1215	.2138	12.8300
25 FT.	1	(=)	.1215	.2673	16.0380
30 FT.	1	(=)	.1215	.3208	19.2460
40 FT.	1	(=)	.1215	.4277	25.6610

DRY GRAIN UNLOADING RATE – DPX AND DPXSL SERIES DRYERS

D.C. VOLTS = DRY UNLOAD RATE PER HOUR

MODEL:		10FT.	15FT.	20FT.	25FT.	30FT.	40FT
D.C. VOLTS	RPM	DRY BU/HR	DRY BU/HR	DRY BU/HR	DRU BU/HR	DRY BU/HR	DRY BU/HR
10.0	1.62	85.50	128.30	171.60	223.20	256.80	357.00
11.0	1.78	94.10	141.10	188.20	235.20	282.30	376.40
12.0	1.94	102.60	154.00	205.30	256.20	307.90	410.60
13.0	2.11	111.20	166.80	222.40	279.00	333.60	444.80
14.0	2.27	119.70	179.60	239.50	300.00	359.30	479.00
15.0	2.43	128.30	192.50	256.60	321.00	384.90	513.20
16.0	2.54	136.80	205.30	273.70	335.00	410.60	547.40
17.0	2.75	145.40	218.10	290.80	363.00	436.20	581.60
18.0	2.92	153.90	230.90	307.90	385.80	461.90	615.90
19.0	3.08	162.59	243.80	325.00	406.80	487.60	650.00
20.0	3.24	171.00	256.60	342.10	427.80	513.20	684.30
21.0	3.40	179.60	269.40	359.30	448.80	538.90	718.50
22.0	3.56	188.10	282.30	376.40	470.40	564.50	752.70
23.0	3.73	196.70	295.10	393.50	492.60	590.20	786.90
24.0	3.89	205.30	307.90	410.60	513.60	615.90	821.10
25.0	4.05	213.80	320.80	427.70	534.60	641.50	855.40
26.0	4.21	222.40	333.60	444.80	556.20	667.20	889.60
27.0	4.37	230.90	346.40	461.90	577.20	692.80	923.80
28.0	4.54	239.50	359.30	479.00	599.40	718.50	958.00
29.0	4.70	248.00	372.10	496.10	620.40	744.20	992.20
30.0	4.86	256.60	384.90	513.20	642.00	769.80	1026.40
31.0	5.02	265.10	397.70	530.30	663.00	795.50	1060.60
32.0	5.18	273.70	410.60	547.40	684.00	821.10	1094.90
33.0	5.35	282.20	423.40	564.50	706.20	846.80	1129.10
34.0	5.51	290.80	436.20	581.60	727.80	872.50	1163.30
35.0	5.67	299.30	449.10	598.80	748.80	898.10	1197.50
36.0	5.83	307.90	461.90	615.90	769.80	923.80	1231.70
37.0	5.99	316.40	474.70	633.00	790.80	949.40	1265.90
38.0	6.16	325.00	487.60	650.10	813.60	975.10	1300.10
39.0	6.32	333.60	500.40	667.20	834.60	1000.80	1334.40
40.0	6.48	342.10	513.20	684.30	855.60	1026.40	1368.60

DRY GRAIN UNLOADING RATE - DPX AND DPXSL SERIES DRYERS

D.C. VOLTS = DRY UNLOAD RATE PER HOUR

MODEL:		10FT.	15FT.	20FT.	25FT.	30FT.	40FT.
D.C. VOLTS	RPM	DRY BU/HR	DRY BU/HR	DRY BU/HR	DRU BU/HR	DRY BU/HR	DRY BU/HR
41.0	6.64	350.70	526.00	701.40	876.48	1052.10	1402.80
42.0	6.80	359.20	538.90	718.50	897.60	1077.80	1437.00
43.0	6.97	367.80	551.70	735.60	920.40	1103.40	1471.20
44.0	7.13	376.30	564.50	752.70	941.40	1129.10	1505.40
45.0	7.29	384.90	577.40	769.80	962.40	1154.70	1539.60
46.0	7.45	393.40	590.20	786.90	983.40	1180.40	1573.90
47.0	7.61	402.00	603.00	804.00	1005.00	1206.10	1608.10
48.0	7.78	410.50	615.90	821.10	1027.20	1231.70	1642.30
49.0	7.94	419.10	628.70	838.30	1048.20	1257.40	1676.50
50.0	8.10	427.60	641.50	855.40	1069.20	1283.00	1710.70
51.0	8.26	436.20	654.40	872.50	1090.80	1308.70	1744.90
52.0	8.42	444.80	667.20	889.60	1111.80	1334.40	1779.10
53.0	8.59	453.30	680.00	906.70	1134.00	1360.00	1813.40
54.0	8.75	461.90	692.80	923.80	1155.00	1385.70	1847.60
55.0	8.91	470.40	705.70	940.90	1176.60	1411.30	1881.80
56.0	9.07	479.00	718.50	958.00	1197.60	1437.00	1916.00
57.0	9.23	487.50	731.30	975.10	1218.60	1462.70	1950.20
58.0	9.40	496.10	744.20	992.20	1240.80	1488.30	1984.40
59.0	9.56	504.60	757.00	1009.30	1262.40	1514.00	2018.60
60.0	9.72	513.20	769.80	1026.40	1283.40	1539.60	2052.90
61.0	9.88	521.70	782.70	1043.50	1304.40	1565.30	2087.10
62.0	10.04	530.30	795.50	1060.60	1325.40	1591.00	2121.30
63.0	10.21	538.80	808.30	1077.80	1348.20	1616.60	2155.50
64.0	10.37	547.40	821.10	1094.90	1369.20	1642.30	2189.70
65.0	10.53	555.90	834.00	1112.00	1390.20	1668.00	2223.90
66.0	10.69	564.50	846.80	1129.10	1411.20	1693.60	2258.20
67.0	10.85	573.10	859.60	1146.20	1432.20	1719.30	2292.40
68.0	11.02	581.60	872.50	1163.30	1455.00	1744.90	2326.60
69.0	11.18	590.20	885.30	1180.40	1476.00	1770.60	2360.80
70.0	11.34	598.70	898.10	1197.50	1497.00	1796.30	2395.00

DRY GRAIN UNLOADING RATE - DPX AND DPXSL SERIES DRYERS

D.C. VOLTS = DRY UNLOAD RATE PER HOUR

MODEL:		10FT.	15FT.	20FT.	25FT.	30FT.	40FT.
D.C. VOLTS	RPM	DRY BU/HR	DRY BU/HR	DRY BU/HR	DRU BU/HR	DRY BU/HR	DRY BU/HR
71.0	11.50	607.30	911.00	1214.60	1518.00	1821.90	2429.20
72.0	11.66	615.80	923.80	1231.70	1539.60	1847.60	2463.40
73.0	11.83	624.40	936.60	1248.80	1561.80	1873.20	2497.70
74.0	11.99	632.90	949.40	1265.90	1582.80	1898.90	2531.90
75.0	12.15	641.50	962.30	1283.00	1603.08	1924.60	2566.10
76.0	12.31	650.00	975.10	1300.10	1625.40	1950.20	2600.30
77.0	12.47	658.60	987.90	1317.30	1646.40	1975.90	2634.50
78.0	12.64	667.10	1000.80	1334.40	1668.60	2001.50	2668.70
79.0	12.80	675.70	1013.60	1351.50	1689.60	2027.20	2702.90
80.0	12.96	684.30	1026.40	1368.60	1711.20	2052.90	2737.20
81.0	13.12	692.80	1039.30	1385.70	1732.20	2078.50	2771.40
82.0	13.28	701.40	1052.10	1402.80	1753.20	2104.20	2805.60
83.0	13.45	709.90	1064.90	1419.90	1775.00	2129.80	2839.80
84.0	13.61	718.50	1077.80	1437.00	1797.00	2155.50	2874.00
85.0	13.77	727.00	1090.60	1454.10	1818.00	2181.20	2908.20
86.0	13.93	735.60	1103.40	1471.20	1839.00	2206.80	2942.40
87.0	14.09	744.10	1116.20	1488.30	1860.00	2232.50	2976.70
88.0	14.26	752.70	1129.10	1505.40	1882.80	2258.20	3010.90
89.0	14.42	761.20	1141.90	1522.50	1903.80	2283.80	3045.10
90.0	14.58	769.80	1154.70	1539.60	1924.80	2309.50	3079.30

SPECIAL CHART: DRIVE SPROCKET: 4016 DRIVEN SPROCKET: 4032

MODEL	VOLT	(=)	RPM	DRY BU. / MIN.	DRY BU. / HR
10 FT.	1	(=)	.1620	.1426	8.5536
15 FT.	1	(=)	.1620	.2138	12.8304
20 FT.	1	(=)	.1620	.2851	17.1072
30 FT.	1	(=)	.1620	.4277	25.6608
40 FT.	1	(=)	.1620	.5702	34.2144

DRY GRAIN UNLOADING RATE - DPX4T AND DPX8T SERIES DRYERS

D.C. VOLTS = DRY UNLOAD RATE PER HOUR

MODEL:		10FT.	15FT.	20FT.	25FT.	30FT.	40FT.	
D.C. RPM	BU/HR	DRY BU/HR	DRY BU/HR	DRY BU/HR	DRU BU/HR	DRY BU/HR	DRY	VOLTS
10.0	2.43	128.30	192.50	256.60	320.80	385.00	513.40	
11.0	2.67	141.13	211.75	282.26	352.88	423.50	564.74	
12.0	2.92	153.96	231.00	307.92	384.96	462.00	616.08	
13.0	3.16	166.79	250.25	333.58	417.04	500.50	667.42	
14.0	3.40	179.62	269.50	359.24	449.12	539.00	718.76	
15.0	3.65	192.45	288.75	384.90	481.20	577.50	770.10	
16.0	3.89	205.28	308.00	410.56	513.28	616.00	821.44	
17.0	4.13	218.11	327.25	436.22	545.36	654.50	872.78	
18.0	4.38	230.94	346.50	461.88	577.44	693.00	924.12	
19.0	4.62	243.77	365.75	487.54	609.52	731.50	975.46	
20.0	4.68	256.60	385.00	513.20	641.60	770.00	1026.80	
21.0	5.11	269.43	404.25	538.86	673.68	808.50	1078.14	
22.0	5.35	282.26	423.50	564.52	705.76	847.00	1129.48	
23.0	5.59	295.09	442.75	590.18	737.84	885.50	1180.82	
24.0	5.83	307.92	462.00	615.84	769.92	924.00	1232.16	
25.0	6.08	320.75	481.25	641.50	802.00	962.50	1283.50	
26.0	6.32	333.58	500.50	667.16	834.08	1001.00	1334.84	
27.0	6.56	346.41	519.75	692.82	866.16	1039.50	1386.18	
28.0	6.81	359.24	539.00	718.48	898.24	1078.00	1437.52	
29.0	7.05	372.07	558.25	744.14	930.32	1116.50	1488.86	
30.0	7.29	384.90	577.50	769.80	962.40	1155.00	1540.20	
31.0	7.51	397.73	596.75	795.46	994.48	1193.50	1591.54	
32.0	7.78	410.56	616.00	821.12	1026.56	1232.00	1642.88	
33.0	8.02	423.39	635.25	846.78	1058.64	1270.50	1694.22	
34.0	8.27	436.22	654.00	872.44	1090.72	1309.00	1745.56	
35.0	8.51	449.05	673.75	898.10	1122.80	1347.50	1796.90	
36.0	8.75	461.88	693.00	923.76	1154.88	1386.00	1848.24	
37.0	8.99	474.71	712.25	949.42	1186.96	1424.50	1899.58	
38.0	9.24	487.54	731.50	975.08	1219.04	1463.00	1950.92	
39.0	9.48	500.37	750.75	1000.74	1251.12	1501.50	2002.26	
40.0	9.72	513.20	770.00	1026.40	1283.20	1540.00	2053.60	

DRY GRAIN UNLOADING RATE - DPX4T AND DPX8T SERIES DRYERS

D.C. VOLTS = DRY UNLOAD RATE PER HOUR

MODEL:		10FT.	15FT.	20FT.	25FT.	30FT.	40FT.	
D.C. RPM	BU/HR	DRY BU/HR	DRY BU/HR	DRY BU/HR	DRU BU/HR	DRY BU/HR	DRY	VOLTS
41.0	9.97	526.03	789.25	1052.06	1315.28	1578.50	2104.94	
42.0	10.21	538.86	808.50	1077.72	1347.36	1617.00	2156.28	
43.0	10.45	551.69	827.75	1033.38	1379.44	1655.50	2207.62	
44.0	10.70	564.52	847.00	1129.04	1411.52	1694.00	2258.96	
45.0	10.94	577.35	866.25	1154.70	1443.60	1732.50	2310.30	
46.0	11.18	590.18	885.50	1180.36	1475.68	1771.00	2361.64	
47.0	11.43	603.01	904.75	1206.02	1507.76	1809.50	2412.98	
48.0	11.67	615.84	924.00	1231.68	1539.84	1848.00	2464.32	
49.0	11.91	628.67	943.25	1257.34	1571.92	1886.50	2515.66	
50.0	12.16	641.50	962.50	1283.00	1604.00	1925.00	2567.00	
51.0	12.40	654.33	981.75	1308.66	1636.08	1963.50	2618.34	
52.0	12.64	667.16	1001.00	1334.32	1668.16	2002.00	2669.68	
53.0	12.88	679.99	1020.25	1359.98	1700.24	2040.50	2721.02	
54.0	13.13	692.82	1039.50	1385.64	1732.32	2079.00	2772.36	
55.0	13.37	705.65	1058.75	1411.30	1764.40	2117.50	2823.70	
56.0	13.61	718.48	1078.00	1436.96	1796.48	2156.00	2875.04	
57.0	13.86	731.31	1097.25	1462.62	1828.56	2194.50	2926.38	
58.0	14.10	744.14	1116.50	1488.28	1860.64	2233.00	2977.72	
59.0	14.34	756.97	1135.75	1513.94	1892.72	2271.50	3029.06	
60.0	14.59	769.80	1155.00	1539.60	1924.80	2310.00	3080.40	
61.0	14.83	782.63	1174.25	1565.26	1956.88	2348.50	3131.74	
62.0	15.07	795.46	1193.50	1590.92	1988.96	2387.00	3183.08	
63.0	15.32	808.29	1212.75	1616.58	2021.04	2425.50	3234.42	
64.0	15.56	821.12	1232.00	1642.24	2053.12	2464.00	3285.76	
65.0	15.80	833.95	1251.25	1667.90	2085.20	2502.50	3337.10	
66.0	16.04	846.78	1270.50	1693.56	2117.28	2541.00	3388.44	
67.0	16.29	859.61	1289.75	1719.22	2149.36	2579.50	3439.78	
68.0	16.53	872.44	1309.00	1744.88	2181.44	2618.00	3491.12	
69.0	16.77	885.27	1328.25	1770.54	2213.52	2656.50	3542.46	
70.0	17.02	898.10	1347.50	1796.20	2245.60	2695.00	3593.80	

DRY GRAIN UNLOADING RATE - DPX4T AND DPX8T SERIES DRYERS

D.C. VOLTS = DRY UNLOAD RATE PER HOUR

MODEL:		10FT.	15FT.	20FT.	25FT.	30FT.	40FT.	
D.C. RPM	BU/HR	DRY BU/HR	DRY BU/HR	DRY BU/HR	DRU BU/HR	DRY BU/HR	DRY	VOLTS
71.0	17.26	910.93	1366.75	1821.86	2277.68	2733.50	3645.14	
72.0	17.50	923.76	1386.00	1847.52	2309.76	2772.00	3696.48	
73.0	17.75	936.59	1405.25	1873.18	2341.84	2810.50	3747.82	
74.0	17.99	949.42	1424.50	1898.84	2373.92	2849.00	3799.16	
75.0	18.23	962.25	1443.75	1924.50	2406.00	2887.50	3850.50	
76.0	18.48	975.08	1463.00	1950.16	2438.08	2926.00	3901.84	
77.0	18.72	987.91	1482.25	1975.82	2470.16	2964.50	3953.18	
78.0	18.96	1000.74	1501.50	2001.48	2502.24	3003.00	4004.52	
79.0	19.20	1013.57	1520.75	2027.14	2534.32	3041.50	4055.86	
80.0	19.45	1026.40	1540.00	2052.80	2566.40	3080.00	4107.20	
81.0	19.69	1039.23	1559.25	2078.46	2598.48	3118.50	4158.54	
82.0	19.93	1052.06	1578.50	2104.12	2630.56	3157.00	4209.88	
83.0	20.18	1064.89	1597.75	2129.78	2662.64	3195.50	4261.22	
84.0	20.42	1077.72	1617.00	2155.44	2694.72	3234.00	4312.56	
85.0	20.66	1090.55	1636.25	2181.10	2726.80	3272.50	4363.90	
86.0	20.91	1103.38	1655.50	2206.76	2758.88	3311.00	4415.24	
87.0	21.15	1116.21	1674.75	2232.42	2790.96	3349.50	4466.58	
88.0	21.39	1129.04	1694.00	2258.08	2823.04	3388.00	4517.92	
89.0	21.64	1141.87	1713.25	2283.74	2855.12	3426.50	4569.26	
90.0	21.88	1154.70	1732.50	2309.40	2887.20	3465.00	4620.60	

SPECIAL CHART: DRIVE SPROCKET: 4024 DRIVEN SPROCKET: 4032

MODEL	VOLT	(=)	RPM	DRY BU. / MIN.	DRY BU. / HR
10 FT.	1	(=)	.2431	.2139	12.83
15 FT.	1	(=)	.2431	.3209	19.25
20 FT.	1	(=)	.2431	.4278	25.66
25 FT.	1	(=)	.2431	.5348	32.08
30 FT.	1	(=)	.2431	.6418	38.50
40 FT.	1	(=)	.2431	.8557	51.34

DRY GRAIN UNLOADING RATE – DPX12T & DPX16GT SERIES DRYERS

D.C. VOLTS = DRY UNLOAD RATE PER HOUR

MODEL:		10FT.	15FT.	20FT.	25FT.	30FT.	40FT.
D.C. VOLTS	RPM	DRY BU/HR	DRY BU/HR	DRY BU/HR	DRY BU/HR	DRY BU/HR	DRY BU/HR
0.0	2.63	139.00	208.50	278.00	347.60	417.10	556.10
11.0	2.90	152.90	229.35	305.80	382.36	458.81	611.71
12.0	3.16	166.80	250.20	333.60	417.12	500.52	667.32
13.0	3.42	180.70	271.05	361.40	451.88	542.23	722.93
14.0	3.69	194.60	291.90	389.20	486.64	583.94	778.54
15.0	3.95	208.50	312.75	417.00	521.40	625.65	834.15
16.0	4.21	222.40	333.60	444.80	556.16	667.36	889.76
17.0	4.48	236.30	354.45	472.60	590.92	709.07	945.37
18.0	4.74	250.20	375.30	500.40	625.68	750.78	1000.98
19.0	5.00	264.10	396.15	528.20	660.44	792.49	1056.59
20.0	5.27	278.00	417.00	556.00	695.20	834.20	1112.20
21.0	5.53	291.90	437.85	583.80	729.96	875.91	1167.81
22.0	5.79	305.80	458.70	611.60	764.72	917.62	1223.42
23.0	6.06	319.70	479.55	639.40	799.48	959.33	1279.03
24.0	6.32	333.60	500.40	667.20	834.24	1001.04	1334.64
25.0	6.58	347.50	521.25	695.00	869.00	1042.75	1390.25
26.0	6.85	361.40	542.10	722.80	903.76	1084.46	1445.86
27.0	7.11	375.30	562.95	750.60	938.52	1126.17	1501.47
28.0	7.37	389.20	583.80	778.40	973.28	1167.88	1557.08
29.0	7.64	403.10	604.65	806.20	1008.04	1209.59	1612.69
30.0	7.90	417.00	625.50	834.00	1042.80	1251.30	1668.30
31.0	8.16	430.90	646.35	861.80	1077.56	1293.01	1723.91
32.0	8.43	444.80	667.20	889.60	1112.32	1334.72	1779.52
33.0	8.69	458.70	688.05	917.40	1147.08	1376.43	1835.13
34.0	8.95	472.60	708.90	945.20	1181.84	1418.14	1890.74
35.0	9.22	486.50	729.75	973.00	1216.60	1459.85	1946.35
36.0	9.48	500.40	750.60	1000.80	1251.36	1501.56	2001.96
37.0	9.74	514.30	771.45	1028.60	1286.12	1543.27	2057.57
38.0	10.01	528.20	792.30	1056.40	1320.88	1584.98	2113.18
39.0	10.27	542.10	813.15	1084.20	1355.64	1626.69	2168.79
40.0	10.53	556.00	834.00	1112.00	1390.40	1668.40	2224.40

DRY GRAIN UNLOADING RATE – DPX12T & DPX16GT SERIES DRYERS

D.C. VOLTS = DRY UNLOAD RATE PER HOUR

MODEL:		10FT.	15FT.	20FT.	25FT.	30FT.	40FT.
D.C. VOLTS	RPM	DRY BU/HR	DRY BU/HR	DRY BU/HR	DRY BU/HR	DRY BU/HR	DRY BU/HR
41.0	10.80	569.90	854.85	1139.80	1425.16	1710.11	2280.01
42.0	11.06	583.80	875.70	1167.60	1459.92	1751.82	2335.62
43.0	11.32	597.70	896.55	1195.40	1494.68	1793.53	2391.23
44.0	11.59	611.60	917.40	1223.20	1529.44	1835.24	2446.84
45.0	11.85	625.50	938.25	1251.00	1564.20	1876.95	2502.45
46.0	12.11	639.40	959.10	1278.80	1598.96	1918.66	2558.06
47.0	12.38	653.30	979.95	1306.60	1633.72	1960.37	2613.67
48.0	12.64	667.20	1000.80	1334.40	1668.48	2002.08	2669.28
49.0	12.90	681.10	1021.65	1362.20	1703.24	2043.79	2724.89
50.0	13.17	695.00	1042.50	1390.00	1738.00	2085.50	2780.50
51.0	13.43	708.90	1063.35	1417.80	1772.76	2127.21	2836.11
52.0	13.69	722.80	1084.20	1445.60	1807.52	2168.92	2891.72
53.0	13.95	736.70	1105.05	1473.40	1842.28	2210.63	2947.33
54.0	14.22	750.60	1125.90	1501.20	1877.04	2252.34	3002.94
55.0	14.48	764.50	1146.75	1529.00	1911.80	2294.05	3058.55
56.0	14.74	778.40	1167.60	1556.80	1946.56	2335.76	3114.16
57.0	15.01	792.30	1188.45	1584.60	1981.32	2377.47	3169.77
58.0	15.27	806.20	1209.30	1612.40	2016.08	2419.18	3225.38
59.0	15.53	820.10	1230.15	1640.20	2050.84	2460.89	3280.99
60.0	15.80	834.00	1251.00	1668.00	2085.60	2502.60	3336.60
61.0	16.06	847.90	1271.85	1695.80	2120.36	2544.31	3392.21
62.0	16.32	861.80	1292.70	1723.60	2155.12	2586.02	3447.82
63.0	16.59	875.70	1313.55	1751.40	2189.88	2627.73	3503.43
64.0	16.85	889.60	1334.40	1779.20	2224.64	2669.44	3559.04
65.0	17.11	903.50	1355.25	1807.00	2259.40	2711.15	3614.65
66.0	17.38	917.40	1376.10	1834.80	2294.16	2752.86	3670.26
67.0	17.64	931.30	1396.95	1862.60	2328.92	2794.57	3725.87
68.0	17.90	945.20	1417.80	1890.40	2363.68	2836.28	3781.48
69.0	18.17	959.10	1438.65	1918.20	2398.44	2877.99	3837.09
70.0	18.43	973.00	1459.50	1946.00	2433.20	2919.70	3892.70

DRY GRAIN UNLOADING RATE – DPX12T & DPX16GT SERIES DRYERS

D.C. VOLTS = DRY UNLOAD RATE PER HOUR

MODEL:		10FT.	15FT.	20FT.	25FT.	30FT.	40FT.
D.C. VOLTS	RPM	DRY BU/HR	DRY BU/HR	DRY BU/HR	DRY BU/HR	DRY BU/HR	DRY BU/HR
71.0	18.69	986.90	1480.35	1973.80	2467.96	2961.41	3948.31
72.0	18.96	1000.80	1501.20	2001.60	2502.72	3003.12	4003.92
73.0	19.22	1014.70	1522.05	2029.40	2537.48	3044.83	4059.53
74.0	19.48	1028.60	1542.90	2057.20	2572.24	3086.54	4115.14
75.0	19.75	1042.50	1563.75	2085.00	2607.00	3128.25	4170.75
76.0	20.01	1056.40	1584.60	2112.80	2641.76	3169.96	4226.36
77.0	20.27	1070.30	1605.45	2140.60	2676.52	3211.67	4281.97
78.0	20.54	1084.20	1626.30	2168.40	2711.28	3253.38	4337.58
79.0	20.80	1098.10	1647.15	2196.20	2746.04	3295.09	4393.19
80.0	21.06	1112.00	1668.00	2224.00	2780.80	3336.80	4448.80
81.0	21.33	1125.90	1688.85	2251.80	2815.56	3378.51	4504.41
82.0	21.59	1139.80	1709.70	2279.60	2850.32	3420.22	4560.02
83.0	21.85	1153.70	1730.55	2307.40	2885.08	3461.93	4615.63
84.0	22.12	1167.60	1751.40	2335.20	2919.84	3503.64	4671.24
85.0	22.38	1181.50	1772.25	2363.00	2954.60	3545.35	4726.85
86.0	22.64	1195.40	1793.10	2390.80	2989.36	3587.06	4782.46
87.0	22.91	1209.30	1813.95	2418.60	3024.12	3628.77	4838.07
88.0	23.17	1223.20	1834.80	2446.40	3058.88	3670.48	4893.68
89.0	23.43	1237.10	1855.65	2474.20	3093.64	3712.19	4949.29
90.0	23.70	1251.00	1876.50	2502.00	3128.40	3753.90	5004.90

SPECIAL CHART: DRIVE SPROCKET: 4026 DRIVEN SPROCKET: 4032

MODEL	VOLT	(=)	RPM	DRY BU. / MIN.	DRY BU. / HR
10 FT.	1	(=)	.2633	.2317	13.90
15 FT.	1	(=)	.2633	.3476	20.85
20 FT.	1	(=)	.2633	.4634	27.80
25 FT.	1	(=)	.2633	.5793	34.76
30 FT.	1	(=)	.2633	.6951	41.71
40 FT.	1	(=)	.2633	.9268	55.61

Alarm, Limit, Indication & Error Messages

Indication	Description	Possible Causes	Corrective Action
Alarm won't clear or reset	Alarm will not clear or reset with keypad or digital input	• Alarm latching is active • Alarm set to incorrect output • Alarm is set to incorrect source • Sensor input is out of alarm set point range • Alarm set point is incorrect • Alarm is set to incorrect type • Digital input function is incorrect	• Reset alarm when process is within range or disable latching • Set output to correct alarm source instance • Set alarm source to correct input instance • Correct cause of sensor input out of alarm range • Set alarm set point to correct trip point • Set alarm to correct type: process, deviation or power • Set digital input function and source instance
Alarm won't occur	Alarm will not activate output	• Alarm silencing is active • Alarm blocking is active • Alarm is set to incorrect output • Alarm is set to incorrect source • Alarm set point is incorrect • Alarm is set to incorrect type	• Disable alarm silencing, if required • Disable alarm blocking, if required • Set output to correct alarm source instance • Set alarm source to correct input instance • Set alarm set point to correct trip point • Set alarm to correct type: process, deviation or power
[ALE1] Alarm Error [ALE2] [ALE3] [ALE4]	Alarm state cannot be determined due to lack of sensor input	• Sensor improperly wired or open • Incorrect setting of sensor type • Calibration corrupt	• Correct wiring or replace sensor • Match setting to sensor used • Check calibration of controller
[ALL1] Alarm Low [ALL2] [ALL3] [ALL4]	Sensor input below low alarm set point	• Temperature is less than alarm set point • Alarm is set to latching and an alarm occurred in the past • Incorrect alarm set point • Incorrect alarm source	• Check cause of under temperature • Clear latched alarm • Establish correct alarm set point • Set alarm source to proper setting
[ALH1] Alarm High [ALH2] [ALH3] [ALH4]	Sensor input above high alarm set point	• Temperature is greater than alarm set point • Alarm is set to latching and an alarm occurred in the past • Incorrect alarm set point • Incorrect alarm source	• Check cause of over temperature • Clear latched alarm • Establish correct alarm set point • Set alarm source to proper setting
[Er.1] Error Input	Sensor does not provide a valid signal to controller	• Sensor improperly wired or open • Incorrect setting of sensor type • Calibration corrupt	• Correct wiring or replace sensor • Match setting to sensor used • Check calibration of controller

LPo 1 Loop Open Error	Open Loop Detect is active and the process value did not deviate by a user-selected value in a user specified period.	• Setting of Open Loop Detect Time incorrect • Setting of Open Loop Detect Deviation incorrect • Thermal loop is open • Open Loop Detect function not required but activated	• Set correct Open Loop Detect Time for application • Set correct Open Loop Deviation value for application • Determine cause of open thermal loop: misplaced sensors, load failure, loss of power to load, etc. • Deactivate Open Loop Detect feature
LPr 1 Loop Reversed Error	Open Loop Detect is active and the process value is headed in the wrong direction when the output is activated based on deviation value and user-selected value.	• Setting of Open Loop Detect Time incorrect • Setting of Open Loop Detect Deviation incorrect • Output programmed for incorrect function • Thermocouple sensor wired in reverse polarity	• Set correct Open Loop Detect Time for application • Set correct Open Loop Deviation value for application • Set output function correctly • Wire thermocouple correctly, (red wire is negative)
rP 1 Ramping 1	Controller is ramping to new set point	• Ramping feature is activated	• Disable ramping feature if not required
tUn 1 Autotuning 1	Controller is autotuning the control loop	• User started the autotune function • Digital input is set to start autotune	• Wait until autotune completes or disable autotune feature • Set digital input to function other than autotune, if desired
No heat/cool action	Output does not activate load	• Output function is incorrectly set • Control mode is incorrectly set • Output is incorrectly wired • Load, power or fuse is open • Control set point is incorrect • Incorrect controller model for application	• Set output function correctly • Set control mode appropriately (Open vs Closed Loop) • Correct output wiring • Correct fault in system • Set control set point in appropriate control mode and check source of set point: remote, idle, profile, closed loop, open loop • Obtain correct controller model for application
No Display	No display indication or LED illumination	• Power to controller is off • Fuse open • Breaker tripped • Safety interlock switch open • Separate system limit control activated • Wiring error • Incorrect voltage to controller	• Turn on power • Replace fuse • Reset breaker • Close interlock switch • Reset limit • Correct wiring issue • Apply correct voltage, check part number
No Serial Communication	Cannot establish serial communications with the controller	• Address parameter incorrect • Incorrect protocol selected • Baud rate incorrect • Parity incorrect • Wiring error • EIA-485 converter issue • Incorrect computer or PLC communications port • Incorrect software setup • Termination resistor may be required	• Set unique addresses on network • Match protocol between devices • Match baud rate between devices • Match parity between devices • Correct wiring issue • Check settings or replace converter • Set correct communication port • Correct software setup to match controller • Place 120 Ω resistor across EIA-485 on last controller

Indication	Description	Possible Causes	Corrective Action
Process doesn't control to set point	Process is unstable or never reaches set point	• Controller not tuned correctly • Control mode is incorrectly set • Control set point is incorrect	• Perform autotune or manually tune system • Set control mode appropriately (Open vs Closed Loop) • Set control set point in appropriate control mode and check source of set point: remote, idle, profile, closed loop, open loop
Temperature runway	Process value continues to increase or decrease past set point.	• Controller output incorrectly programmed • Thermocouple reverse wired • Controller output wired incorrectly • Short in heater • Power controller connection to controller defective • Controller output defective	• Verify output function is correct (heat or cool) • Correct sensor wiring (red wire negative) • Verify and correct wiring • Replace heater • Replace or repair power controller • Replace or repair controller
100 Device Error rEEo	Controller displays internal malfunction message at power up.	• Controller defective	• Replace or repair controller
Menus inaccessible	Unable to access SEt, OP-Er, FCty or ProF menus or particular prompts in Home Page	• Security set to incorrect level • Digital input set to lockout keypad • Custom parameters incorrect	• Check lockout setting in Factory Page • Change state of digital input • Change custom parameters in Factory Page
EZ-Key doesn't work	EZ-Key does not activate required function	• EZ-Key function incorrect • EZ-Key function instance not incorrect • Keypad malfunction	• Verify EZ-Key function in Setup Menu • Check that the function instance is correct • Replace or repair controller

Clearing Errors & Limit Messages

To clear error or limit messages press the RESET key. You may also turn main panel power "OFF" and back "ON" again. Error or Limit messages will not clear until the cause or reason for the error has been addressed.

Watlow EZ-ZONE Moisture Controller - Configuration Record

Setup Page



To reach the Setup page hold the "up" and "down" arrow keys together for **6 seconds**.

Menu	Instance	Parameter	Factory Setting	DELUX Setting	Parameter Description
A1					**Analog Input**
		SEn	tC	r0.1K	Selects the type of sensor used
		rtL	2	3	Selects the leads in sensor
		FiL	0.5	10	Filters erratic signal, for smoother PID calculations
		tEr	oFF	oFF	Forces manual clear of input errrors
		dEC	0	0.0	Selects precision of displayed units
LooP					**PID Loop**
		hAG	Pid	oFF	Selects the heat control method
		CAG	oFF	Pid	Selects the cool control method
		CCr	oFF	oFF	Enables or disables cool output curve
		tEUn	no	no	Enables or disable TRU-TUNE+ adaptive tune automatically
		tAGr	Cr iE	Cr iE	Selects the aggressiveness of the autotune funtion
		UFA	USEr	MAn	Selects what output will do when user switches to manual mode
		FAiL	USEr	MAn	Selects what ouput will do when an input error switches control to manual mode
		MAn	0.0	-270	Defines the default manual output power if user swiches control or fault
		LdE	no	no	Enables or disables open-loop detction feature to monitor closed-loop operations
		rP	oFF	oFF	Selects when controller will ramp to setpoint
		LSP	-1999	100	Defines the lower range of the PID setpoint (temperature in automatic mode)
		hSP	9999	3000	Defines the upper range of the PID setpoint (temperature in automatic mode)
		SPLo	-100	-100	Defines the lower range of the PID setpoint (% output in manual mode)
		SPhi	100	0	Defines the upper range of the PID setpoint (% output in manual mode)
oUPt					**Output**
		oUt	voLt	voLt	Selects the type of output
		Fn	hEAt	CooL	Selects which function will drive output
		Fi	1	1	Selects the instance of the function selected above
		SLo	0.00	0.00	Defines the lower range of the scale for the universal process output
		Shi	10.00	8.00	Defines the upper range of the scale for the universal process output
		oLo	0	0	Defines the low power scale, output will never be less than the value specified
		oHi	100	100	Defines the high power scale, output will never be less than the value specified
		oCA	0.0	0.0	Defines an offset value to the process output
ALM1	1				**Alarm 1**
		AtY	oFF	oFF	Selects whether the alarm trigger is a fixed value or will track set point
	2				**Alarm 2**
		AtY	oFF	oFF	Selects whether the alarm trigger is a fixed value or will track set point
	3				**Alarm 3**
		AtY	oFF	oFF	Selects whether the alarm trigger is a fixed value or will track set point
	4				**Alarm 4**
		AtY	oFF	oFF	Selects whether the alarm trigger is a fixed value or will track set point
FUn					**Function**
		LEu	high	high	Selects the state in which the EZ key is in when powered up
		Fn	nonE	nonE	Selects the funtion of the EZ key
		Fi	0	0	Selects which instance the EZ key will affect
GLbL					**Global**
		CF	F	F	Selects the unit of measurement
		ACLF	60	60	Selects the AC line frequency
CoM1					**Communications**
		Ad5	1	1	Sets the network address of this controller
		CF	F	F	Selects UOM in which this communications channel will display
		nU5	YES	YES	Determines whether all values written to control will be saved in EEPROM

Watlow EZ-ZONE Moisture Controller - Configuration Record

Operations Page



To reach the Operations page hold the "up" and "down" arrow keys together for **3 seconds**.

Menu	Instance	Parameter	Factory Setting	DELUX Setting	Parameter Description
A1					**Analog Input**
		Ain	**	**	View the process value
		LEr	**	**	View the cause of the most recent error
		LCA	0	0	Defines calibration offset
Mon					**Monitor**
		CMdA	**	**	View the active control mode
		CPr	**	**	View the current cool output level
		CSP	**	**	View the set point currently in effect
		PuA	**	**	View the current filtered process value using the control input
Loop					**Loop**
		CMd	AUto	AUto	Selects the method that this loop will use to control
		AtSP	90	90	Defines the the setpoint autotune will use as % of current setpoint
		AUt	no	no	Initiates the autotune process
		CSP	75	75	Defines the setpoint the controller will use in PID funtion
		id.S	75	115	Defines a new PID setpoint if high limit is reached
		CPb	25	*55	Defines the proportianl band for the cool output
		ti	180	0	Defines the PID intergral for the output
		td	0	0	Defines the PID derivative time for the output
		db	0	0	Defines the offset to the proportional band
		oSP	0	-270	Defines a fixed level of output power when in manual mode
ALM1	1				**Alarm 1**
		ALo	32.0	32.0	Defines the low range of alarm instance
		Ahi	300.0	300.0	Defines the high range of the alarm instance
	2				**Alarm 2**
		ALo	32.0	32.0	Defines the low range of alarm instance
		Ahi	300.0	300.0	Defines the high range of the alarm instance
	3				**Alarm 3**
		ALo	32.0	32.0	Defines the low range of alarm instance
		Ahi	300.0	300.0	Defines the high range of the alarm instance
	4				**Alarm 4**
		ALo	32.0	32.0	Defines the low range of alarm instance
		Ahi	300.0	300.0	Defines the high range of the alarm instance

*** DEPENDENT UPON DRYER MODEL - Pb1 settings: DP/DPSL=55; DPX/DPXSL=47; DPX4T=47; DPX8T=43; DPX12T=40; DPX16GT=40**

Watlow EZ-ZONE Moisture Controller - Configuration Record

Factory Page



To reach the Factory page hold the "RESET" and "Advance" arrow keys together for **6 seconds**.

Menu	Instance	Parameter	Factory Setting	DELUX Setting	Parameter Description
CUSt	1				**Custom 1**
		PAr	AC.Pu	AC.Pu	Defines custom parameter to home page
	2				**Custom 2**
		PAr	AC.SP	AC.SP	Defines custom parameter to home page
	3				**Custom 3**
		PAr	AC.Pu	CP7	Defines custom parameter to home page
	4				**Custom 4**
		PAr	AC.SP	CPb	Defines custom parameter to home page
	5				**Custom 5**
		PAr	CP7	CPr	Defines custom parameter to home page
	6				**Custom 6**
		PAr	hPr	nonE	Defines custom parameter to home page
	7				**Custom 7**
		PAr	CPr	nonE	Defines custom parameter to home page
	8				**Custom 8**
		PAr	AUt	nonE	Defines custom parameter to home page
	9				**Custom 9**
		PAr	idLE	nonE	Defines custom parameter to home page
	10				**Custom 10**
		PAr	CP7	nonE	Defines custom parameter to home page
	11				**Custom 11**
		PAr	hPr	nonE	Defines custom parameter to home page
	12				**Custom 12**
		PAr	CPr	nonE	Defines custom parameter to home page
	13				**Custom 13**
		PAr	AUt	nonE	Defines custom parameter to home page
	14				**Custom 14**
		PAr	idLE	nonE	Defines custom parameter to home page
	15				**Custom 15**
		PAr	nonE	nonE	Defines custom parameter to home page
	16				**Custom 16**
		PAr	nonE	nonE	Defines custom parameter to home page
	17				**Custom 17**
		PAr	nonE	nonE	Defines custom parameter to home page
	18				**Custom 18**
		PAr	nonE	nonE	Defines custom parameter to home page
	19				**Custom 19**
		PAr	nonE	nonE	Defines custom parameter to home page
	20				**Custom 20**
		PAr	nonE	nonE	Defines custom parameter to home page
LoC					**Lock**
		LoC.o	2	2	Changes the security level of the operations page
		PASS.E	oFF	oFF	Enables or disables security features
		rLoC	5	5	Sets the read security clearance level
		SLoc	5	5	Sets the write security clearance level
d IAG					
		Pn	**	**	Part number of device
		rEv	**	**	Software revision number
		SbLd	**	**	Software build number

Menu	Instance	Parameter	Factory Setting	DELUX Setting	Parameter Description
		Sn	**	**	Serial number of device
		dAtE	**	**	Date of manufacture
		USr.r	nonE	nonE	Restore user/default settings
		USr.S	nonE	nonE	Save current user settings
		C.LEd	both	both	Turns communications LED on or off for selected ports
		ZonE	on	on	Turns zone LED on or off based on selection
		chAn	on	on	Turns channel LED on or off based on selection
		dPrS	2	2	Defines the number of display pairs
CAL					**Calibration**
		rAw	**	**	View the raw electrical value for this input in units of sensor
		EL.Lo	1.000	1.000	Defines the value to calibrate the low end of the input range
		ELo.o	0.00	0.00	Defines the value to calibrate the low end of the output range
		ELo.S	1.000	1.000	Defines the value to calibrate the slope of the output value

SYSTEM OPERATION

1. **A CLEAN DRYER IS AN EFFICIENT DRYER. THOROUGH INSPECTION AND CLEANING, IF NECESSARY, OF THE PLENUM HEAT CHAMBER AND VACUUM COOLING CHAMBER IS RECOMMENDED EVERY 24 HOURS OF OPERATION.** INSTALL BURNER COVERS PROVIDED WITH DRYER BEFORE CLEANING TO REDUCE AMOUNT OF DUST AND FOREIGN MATERIAL FALLING INTO FAN HUBS AND BURNERS. CLEAN SCREENS ON INSIDE OF PLENUM HEAT CHAMBER, THEN REMOVE DUST AND FOREIGN MATERIAL FROM PLENUM FLOOR. CHECK THE OUTSIDE SCREENS OF THE COOLING SECTION AND CLEAN IF NECESSARY. INSPECT AND CLEAN COOLING CHAMBER IF NECESSARY. THE AREA AROUND DRYER SHOULD ALSO BE KEPT CLEAN.

2. FOR BEST CAPACITY, FRESH-AIR DOORS SHOULD BE OPENED TO THE MAXIMUM OPENING THAT ACHIEVES THE DESIRED DISCHARGE GRAIN TEMPERATURE. IF THE GRAIN IS WARMER THAN DESIRED AS IT DISCHARGES FROM THE DRYER, THE DOOR OPENINGS MAY BE DECREASED UNTIL DESIRED GRAIN TEMPERATURE IS ACHIEVED. THE GREATEST FUEL ECONOMY OCCURS WHEN FRESH-AIR DOORS ARE SET TO COOL THE GRAIN, THERFORE RECAPTURING THE HEAT FROM THE COOLING PROCESS. **NEVER CLOSE TO LESS THAN A ONE (1) INCH OPENING DURING OPERATION. ALL DOORS SHOULD BE SET WITH APPROXIMATELY THE SAME SIZE OPENING.**

   ALL FRESH-AIR DOORS SHOULD BE CLOSED AT THE END OF EACH DRYING SEASON.

3. FUEL SUPPLY TO DRYER SHOULD BE **"SHUT OFF"** AFTER EACH DRYING SEASON.

4. **THE MASTER CIRCUIT BREAKER WHICH SUPPLIES POWER FOR ALL DRYER OPERATIONS SHOULD BE "OFF" WHEN SERVICING AND CLEANING DRYER.**

5. WHEN A DRYER HAVING MORE THAN ONE(1) FAN MOTOR IS STARTED, THERE IS A 3 TO 4 SECOND DELAY BETWEEN EACH MOTOR. THIS DELAY IS TO MINIMIZE STARTING LOAD. AFTER ALL FANS ARE STARTED, POWER IS APPLIED TO THE PURGE TIMER.

6. THE 60 SECOND PURGE CYCLE ASSURES THAT A FLAME CANNOT BE IGNITED BEFORE THE AIR IN THE PLENUM CHAMBER HAS BEEN THOROUGHLY PURGED OF GAS. AT THE END OF THE 60 SECOND PURGE CYCLE, A BURNER READY LIGHT WILL APPEAR AND THE BURNER(S) CAN BE STARTED.

7. IF FLAME IS NOT DETECTED WITHIN FIFTEEN(15) SECONDS OF BURNER SWITCH ON, THE FLAME BYPASS RELAY WILL TIME OUT AND SHUTDOWN ALL SYSTEMS, INCLUDING THE PANEL POWER INTERLOCK. IT WILL THEN BE NECESSARY TO RESTART COMPLETE SYSTEM.

8. THE BURNER(S) NOW BRINGS THE PLENUM TEMPERATURE TO DESIRED THERMOSTAT SETTING. THE TEMPERATURE CONTROLLER WILL MODULATE THE FUEL SUPPLY TO THE BURNER(S) TO MAINTAIN TEMPERATURE AT SET POINT. THIS PREVENTS OVERHEATING OF THE PLENUM CHAMBER **(CHECK HIGH LIMIT SETTING BEFORE EACH DRYING SEASON**).

9. PLENUM TEMPERATURE THERMOSTAT AND "MOISTURE CONTROL THERMOSTAT" SETTINGS WILL VARY ACCORDING TO THE TYPE OF GRAIN BEING DRIED.

10. THE MOISTURE SYSTEM BECOMES FULLY AUTOMATIC AFTER INITIAL CALIBRATION. AS PERCENT OF MOISTURE IN THE GRAIN VARIES, SO DOES THE SPEED OF DISCHARGE. HIGHER MOISTURE RESULTS IN LOWER EXHAUST TEMPERATURE AND DECREASES DISCHARGE SPEED. LOWER MOISTURE RESULTS IN HIGHER EXHAUST TEMPERATURE AND INCREASES DISCHARGE SPEED.

GRAIN DRYER PERFORMANCE CHART
CHART # 1

DRYING CAPACITY WET
BPH PER 1000 BPH-RATED
CAPACITY ON YELLOW CORN

	MOISTURE OF DRIED GRAIN %								
IN	**10**	**11**	**12**	**13**	**14**	**15**	**16**	**17**	**18**
13	870	1200	1900	-	-	-	-	-	-
14	740	930	1250	-	-	-	-	-	-
15	640	780	1000	1550	-	-	-	-	-
16	550	690	850	1200	1900	-	-	-	-
17	500	600	730	960	1400	-	-	-	-
18	450	530	650	800	1100	1600	-	-	-
19	410	480	570	710	910	1250	1800	-	-
20	380	440	510	630	770	1000	1350	1900	-
21	360	410	480	560	690	880	1100	1450	1900
22	340	380	440	510	620	760	920	1150	1450
23	320	360	410	470	560	680	800	1000	1200
24	300	340	390	440	510	610	720	850	1000
25	-	320	370	410	480	560	640	740	870
26	-	-	350	390	440	510	590	670	770
27	-	-	340	370	420	480	540	610	700
28	-	-	320	360	400	450	500	570	630
29	-	-	-	350	390	430	480	530	590
30	-	-	-	340	380	420	460	510	560

PLENUM TEMP	**F2**	**WET GRAIN TEMP**	**F3**	**GRAIN**	**F4**
140 F	.46	20 F	.74	CORN	1.0
150 F	.50	30 F	.78	SOYBEANS	1.0
160 F	.55	40 F	.82	MILO	.9
170 F	.61	50 F	.86	WHEAT	.8
180 F	.69	60 F	.91		
190 F	.77	70 F	1.00		
200 F	.88				
210 F	1.00				

HOW TO USE CHARTS TO FIGURE YOUR CAPACITY

$$\frac{\text{(DRYER RATED CAPACITY @ 20-15\%)}}{1000} \times \text{(BPH IN CHART 1)} \times F2 \times F3 \times F4$$

GRAIN SHRINKAGE TABLE

SHRINKAGE WHEN GRAIN IS DRIED TO THESE LEVELS

INITIAL MOISTURE	12.0	12.5%	13.0%	13.5%	14.0%	14.5%	15.0%	15.5%	16.0%	16.5%	17.0%	17.5%	18.0%	18.5%	19.0%
PERCENT	(PERCENT OF SHRINKAGE)														
15.5	4.48	3.93	3.37	2.81	2.24	1.67	1.09	-	-	-	-	-	-	-	-
16.0	5.05	4.50	3.95	3.39	2.83	2.25	1.68	1.09	-	-	-	-	-	-	-
16.5	5.61	5.07	4.52	3.97	3.41	2.84	2.26	1.68	1.10	-	-	-	-	-	-
17.0	6.18	5.64	5.10	4.55	3.99	3.42	2.85	2.28	1.70	1.10	-	-	-	-	-
17.5	6.75	6.21	5.67	5.12	4.57	4.01	3.44	2.87	2.29	1.70	1.11	-	-	-	-
18.0	7.32	6.79	6.25	5.70	5.15	4.59	4.03	3.46	2.88	2.30	1.71	1.11	-	-	-
18.5	7.89	7.36	6.82	6.28	5.73	5.18	4.62	4.05	3.48	3.48	2.31	1.72	1.11	-	-
19.0	8.45	7.95	7.40	6.86	6.31	5.76	5.21	4.64	4.08	4.08	2.91	2.32	1.72	1.12	-
19.5	9.02	8.50	7.97	7.44	6.90	6.35	5.79	5.23	4.67	4.67	3.52	2.93	2.33	1.73	1.12
20.0	9.59	9.07	8.55	8.01	7.48	6.93	6.38	5.83	5.27	5.27	4.12	3.54	2.94	2.35	1.74
20.5	10.16	9.64	9.12	8.59	8.06	7.52	6.97	6.42	5.86	5.30	4.72	4.14	3.55	2.96	2.36
21.0	10.73	10.24	9.70	9.17	8.64	8.10	7.56	7.01	6.46	5.89	5.32	4.75	4.16	3.57	2.97
21.5	11.30	10.79	10.27	9.75	9.22	8.69	8.15	7.60	7.05	6.49	5.93	5.35	4.77	4.19	3.59
22.0	11.86	11.36Z	10.84	10.33	9.80	9.27	8.74	8.19	7.63	7.09	6.53	5.96	5.38	4.80	4.21
22.5	12.43	11.93	11.42	10.90	10.38	9.86	9.32	8.78	8.24	7.69	7.13	6.57	5.99	5.40	4.83
23.0	13.00	12.50	11.99	11.48	10.97	10.44	9.91	9.38	8.84	8.29	7.73	7.17	6.60	6.03	5.44
23.5	13.57	13.07	12.57	12.06	11.55	11.03	10.50	9.97	9.43	8.89	8.34	7.78	7.21	6.64	6.06
24.0	14.14	13.64	13.14	12.64	12.13	11.61	11.09	10.56	10.03	9.49	8.94	8.38	7.82	7.25	6.68
24.5	14.701	14.21	13.72	13.22	12.71	12.20	11.68	11.15	10.62	10.09	9.54	8.99	8.43	7.87	7.30
25.0	5.28	14.79	14.29	13.79	13.29	12.78	12.26	11.74	11.22	10.68	10.14	9.60	9.04	8.48	7.91
25.5	15.84	15.35	14.87	14.37	13.87	13.37	12.85	12.33	11.81	11.28	10.75	10.20	9.65	9.09	8.53
26.0	16.41	15.93	15.44	14.95	14.45	13.95	13.44	12.93	12.41	11.88	11.35	10.81	10.26	9.71	9.15
26.5	16.98	16.50	16.02	15.53	15.03	14.54	14.03	13.52	13.00	12.48	11.95	11.41	10.87	10.32	9.76
27.0	17.55	17.07	16.60	16.11	15.62	15.12	14.62	14.11	13.60	13.08	12.55	12.02	11.48	10.93	10.38
27.5	18.11	17.64	17.17	16.69	16.20	15.71	15.21	14.71	14.20	13.68	13.16	12.63	12.09	11.55	11.00
28.0	18.68	18.21	17.74	17.26	16.78	16.29	15.79	15.29	14.79	14.27	13.75	13.23	12.70	12.16	11.61
28.5	19.25	18.79	18.32	17.84	17.36	16.87	16.38	15.88	15.38	14.87	14.36	13.83	13.30	12.77	12.23
29.0	19.82	19.36	18.89	18.42	17.94	17.46	16.97	16.48	15.98	15.47	14.96	14.44	13.91	13.38	12.85
29.5	20.39	19.93	19.47	19.00	18.52	18.04	17.56	17.07	16.57	16.07	15.56	15.05	14.52	14.00	13.46
30.0	20.95	20.50	20.04	19.58	19.10	18.63	18.15	17.66	17.17	16.67	16.16	15.65	15.13	14.61	14.08

FORMULAS

(1) $\text{SHRINKAGE} = \frac{(100\% - \%\ \text{DRY MATTER IN DRY GRAIN} \times 100) + .05\%\ \text{HANDLING SHRINK}}{\%\ \text{DRY MATTER IN WET GRAIN}}$

(2) VALUE OF SHRINK = PRICE BASIS GRADE X SHRINKAG

(3) RETURNS TO DRYING = DISCOUNT - VALUE OF SHRINKAGE

DRYER OPERATING LOG

DATE_____

PAGE_____OF_____

DRYER_____

ELEVATOR_____LOCATION_____

GRAIN_____REMARKS, CONDITION OR GRADE_____

TIME OF DAY	AIR TEMPERATURES, F AMBIENT DRYING VOLT	WET GRAIN %MOISTURE	DRY GRAIN TEMP %MOISTURE	MOISTURE REMOVED
AVERAGES:				

SUMMARY (USE ONE OR MORE PAGES FOR A BIN, A SHIPMENT, OR A TOTAL RUN)

GRAIN DESTINATION_____TOTAL WET GRAIN DRIED_____BU.

FINAL MOISTURE_____& TEMP._____F AVG. DRYING CAPACITY_____BU/HR.

WET GRAIN_____,F.M._____% TOTAL FUEL COST $_____

DRY GRAIN GRADE_____,F.M._____% AVG. FUEL COST BU. $_____

SYSTEM SEQUENCE ANALYSIS AND TROUBLESHOOTING

DP/DPSL, DPX/DPXSL, DPX4T, DPX8T, DPX12T AND DPX16GT SERIES MODELS

2014 MODELS

TABLE OF CONTENTS

SEQUENCE		PAGE #
1A.	MAIN CIRCUIT BREAKER "ON" * (230V-1P,240V-3P SYSTEMS ONLY) *	2
1B.	MAIN CIRCUIT BREAKER "ON" * (380V,480V,575V-3P SYSTEMS ONLY) *	3
2.	POWER SWITCH (SW1) TO "ON", ENERGIZING SAFETY CIRCUIT	3
3A.	LOAD SWITCH (SW4) TO "ON", ENERGIZING LOAD CIRCUIT. LEVELING AUGER SYSTEM (STANDARD)	7
3B.	LOAD SWITCH (SW4) TO "ON", ENERGIZING LOAD CIRCUIT. GRAVITY FLOW WITHOUT HIGH AND LOW BIN SWITCHES. (OPTIONAL)	9
3C.	LOAD SWITCH (SW4) TO "ON", ENERGIZING LOAD CIRCUIT. GRAVITY FLOW WITH HIGH AND LOW BIN SWITCHES. (OPTIONAL)	10
4.	FAN SWITCH (SW2) TO "ON", HOLD UNTIL ALL FANS ARE OPERATIONAL.	13
5.	BURNER SWITCH (SW3) TO "ON", ENERGIZING BURNER CIRCUIT	16
6.	UNLOAD SWITCH (SW5) TO "ON", ENERGIZING UNLOAD CIRCUIT.	21
7A.	METERING SELECTOR SWITCH (SW6) TO "MAN" ENERGIZING METERING SYSTEM CIRCUIT.	22
7B.	METERING SELECTOR SWITCH (SW6) TO "AUT". ENERGIZING METERING SYSTEM CIRCUIT.	25
8.	**DRYER VIBRATION CAUSE AND PREVENTON**.	28

SYSTEM SEQUENCE ANALYSIS AND TROUBLESHOOTING

DP/DPSL, DPX/DPXSL, DPX4T, DPX8T, DPX12T AND DPX16GT SERIES MODELS

2014 MODELS

(GENERIC SCHEMATIC-STANDARD: 900-010712)
(GENERIC SCHEMATIC-WITH MOISTURELINK: 900-010713)

1A. SEQUENCE: MAIN CIRCUIT BREAKER "ON" * (230V-1P,240V-3P SYSTEMS) *

ACTION: MAIN POWER LIGHT "ON", APPLIES POWER TO HIGH VOLTAGE CIRCUITS AND 120V CONTROL CIRCUIT BREAKER (CB1).

SYMPTOMS:
A. NO MAIN POWER LIGHT (DS1).
B. CONTROL CIRCUIT BREAKER (CB1) HAS TRIPPED.

POSSIBLE CAUSES:
A1. DEFECTIVE MAIN POWER LIGHT (DS1).
A2. DEFECTIVE CONTROL CIRCUIT BREAKER (CB1).
A3. DEFECTIVE FUSE IN MAIN PANEL DISCONNECT.
A4. MISSING 120 VOLT WIRE.

B1. SHORT CIRCUIT.
B2. OVERLOAD CONDITION HAS OCCURED.
B3. DEFECTIVE CONTROL CIRCUIT BREAKER (CB1).

CORRECTIVE ACTION:
A1. CHECK TERMINAL #25 FOR 120 VOLTS. IF POWER IS PRESENT THE MAIN POWER LIGHT (DS1) IS DEFECTIVE, REPLACE.

A2. CHECK CIRCUIT BREAKER (CB1) FOR FAULT.

A3. CHECK ACROSS L1 & L3 (L2 ON 1P) ON THE MAIN POWER DISTRIBUTION BLOCK. IF 240 VOLTS IS NOT PRESENT, CHECK MAIN PANEL DISCONNECT FOR POWER AND IF FUSES ARE DEFECTIVE, REPLACE. (WILD LEG IS ON L2 - 3P ONLY)

A4. IF VOLTAGE IS PRESENT ACROSS L1 & L3 (L2 ON 1P) ON THE MAIN POWER DISTRIBUTION BLOCK, CHECK TO SEE IF THE BLACK WIRE IS CONNECTED FROM L1 ON THE MAIN POWER DISTRIBUTION BLOCK TO THE POSITIVE SIDE ON THE 120V PANEL POWER DISTRIBUTION BLOCK (TB2). ALSO CHECK TO SEE THAT THE GROUND LEAD (GREEN WIRE) IS CONNECTED TO CHASSIS GROUND AND THE COMMON LEAD OF THE INCOMING POWER SOURCE IS CONNECTED TO CHASSIS GROUND.

B1. REPAIR OR REPLACE BURNED OR BARE WIRING IN CONTACT WITH CHASSIS OR OTHER WIRING.

B2. CHECK CURRENT FOR ANY OVERLOAD CONDITIONS AND CORRECT.

B3. INSPECT CIRCUIT BREAKER (CB1) FOR DEFECT. REPLACE.

1B. SEQUENCE: MAIN CIRCUIT BREAKER "ON" *(380V,480V,575V-3P SYSTEMS)*

ACTION: MAIN POWER LIGHT "ON", APPLIES POWER TO HIGH VOLTAGE CIRCUITS, STEP DOWN TRANSFORMER (XMFR5) AND 120V CONTROL CIRCUIT BREAKER (CB1).

SYMPTOMS:
A. NO MAIN POWER LIGHT (DS1).
B. CONTROL CIRCUIT BREAKER (CB1) HAS TRIPPED.

POSSIBLE CAUSES:
A1. DEFECTIVE MAIN POWER LIGHT (DS1).
A2. DEFECTIVE CONTROL CIRCUIT BREAKER (CB1).
A3. DEFECTIVE FUSE IN MAIN PANEL DISCONNECT.
A4. DEFECTIVE FUSES F1 AND/OR F2.
A5. DEFECTIVE TRANSFORMER (XMFR5).

B1. SHORT CIRCUIT.
B2. OVERLOAD CONDITION.
B3. DEFECTIVE CIRCUIT BREAKER (CB1).

CORRECTIVE ACTION:
A1. CHECK TERMINAL #25 FOR 120 VOLTS. IF POWER IS PRESENT THE MAIN POWER LIGHT (DS1) IS DEFECTIVE, REPLACE.

A2. CHECK CONTROL CIRCUIT BREAKER (CB1), IF DEFECTIVE, REPLACE.

A3. CHECK ACROSS L1 & L3 ON THE MAIN POWER DISTRIBUTION BLOCK. IF LINE VOLTAGE IS NOT PRESENT, CHECK MAIN PANEL DISCONNECT FOR POWER. IF FUSES ARE DEFECTIVE, REPLACE.

A4. CHECK TO SEE IF VOLTAGE IS PRESENT ON L1-POS AND L2-NEU (120 VOLTS) ON THE 120 VOLT PANEL POWER DISTRIBUTION BLOCK (TB2). IF POWER IS NOT PRESENT, CHECK FUSE F1 AND F2. IF DEFECTIVE, REPLACE.

A5. IF FUSE F1 AND F2 ARE OKAY AND NO VOLTAGE IS PRESENT ON L1-POS AND L2-NEU (120 VOLTS) ON THE 120 VOLT PANEL POWER DISTRIBUTION BLOCK (TB2) THE STEP DOWN TRANSFORMER (XMFR 5) IS DEFECTIVE, REPLACE.

B1. REPAIR OR REPLACE BURNED OR BARE WIRING IN CONTACT WITH CHASSIS OR OTHER WIRING.

B2. CHECK CURRENT FOR ANY OVERLOAD CONDITIONS AND CORRECT.

B3. INSPECT CIRCUIT BREAKER (CB1) FOR DEFECT. REPLACE.

2. SEQUENCE: POWER SWITCH (SW1) TO "ON", ENERGIZING SAFETY CIRCUIT.

ACTION: SAFETY CIRCUIT PROVEN LIGHT "ON" (DS11), ALL SAFETY CIRCUIT MONITOR LIGHTS "ON" (DS2 – DS8), APPLIES POWER TO ENTIRE 120 VOLT CIRCUIT AND ENERGIZES POWER RELAY (K8).

SAFETY CIRCUIT MONITOR LIGHTS

HOW THEY WORK!

SAFETY CIRCUIT MONITOR LIGHTS (DS2 – DS8) INDICATE WHAT PART OF THE SAFETY CIRCUIT IS WORKING. TO FIND THE PROBLEM, PRESS THE POWER SWITCH (SW1) TO THE "ON" POSITION AND HOLD. FIND THE FIRST LIGHT THAT IS NOT "ON". THAT WILL SHOW THE DEVICE THAT IS NOT ALLOWING THE SAFETY CIRCUIT TO LOCK IN.

*** PLACE ALL SWITCHES IN "OFF" POSITION BEFORE TROUBLE SHOOTING ***

SYMPTOMS:

A. NO SAFETY CIRCUIT PROVEN LIGHT (DS11) WHEN THE POWER SWITCH (SW1) IS ENGAGED, BUT SOME OF THE SAFETY CIRCUIT MONITOR LIGHTS (DS2 – DS8) WILL LIGHT WHEN THE POWER SWITCH (SW1) IS ENGAGED BUT WILL GO "OFF" WHEN THE POWER SWITCH (SW1) IS RELEASED.

B. SAFETY CIRCUIT PROVEN LIGHT (DS11) "ON" WHEN THE POWER SWITCH (SW1) IS ENGAGED BUT WILL GO "OFF" WHEN THE POWER SWITCH (SW1) IS RELEASED.

POSSIBLE CAUSES:

A1. DEFECTIVE POWER SWITCH (SW1).

A2. NO PLENUM HIGH LIMIT LIGHT (DS2), DEFECTIVE HIGH LIMIT OR HIGH LIMIT TRIPPED FROM EXCESSIVE HEAT IN PLENUM CHAMBER.

A3. NO FAN OVERLOAD LIGHT (DS3), DEFECTIVE FAN OVERLOAD DEVICE (S2, S3, S4, S4), OR STARTER OVERLOAD TRIPPED FROM A FAN MOTOR DRAWING HIGH AMPERAGE.

A4. NO CONVEYOR OVERLOAD LIGHT (DS4), DEFECTIVE CONVEYOR OVERLOAD DEVICE (S5, S6, S7, S8), OR STARTER OVERLOAD TRIPPED FROM AN AUGER DRAWING HIGH AMPERAGE.

A5. NO FEEDROLL MONITOR LIGHT (DS5), DEFECTIVE FEEDROLL MONITOR SWITCH (SW8) OR CAM NUT, TIMER RELAY (K10, K11), OR ON/OFF SELECTOR SWITCH (SW7).

A6. NO DISCHARGE OVERFLOW LIGHT (DS6), DEFECTIVE DISCHARGE OVERFLOW SWITCH OR OVERFLOW CONDITION HAS TRIPPED SWITCH.

A7. NO EXHAUST TEMPERATURE LIMIT LIGHT (DS7), DEFECTIVE EXHAUST LIMIT OR LIMIT HAS TRIPPED BECAUSE OF EXCESSIVE EXHAUST AIR TEMPERATURE.

A8. NO AUXILIARY SAFETY LIGHT (DS8), *CUSTOMER INSTALLED.*

A9. DEFECTIVE BURNER SWITCH (SW3).

A10. DEFECTIVE POWER RELAY (K8).

A11. DEFECTIVE SAFETY CIRCUIT PROVEN LIGHT (DS11).

B. DEFECTIVE FLAME SYSTEM BYPASS DELAY RELAY (K5).

CORRECTIVE ACTION:

A1. IF VOLTAGE IS PRESENT ON TERMINAL #25 (120 VOLTS) THEN CHECK FOR VOLTAGE ON TERMINAL #28 (120 VOLTS) WHILE HOLDING THE POWER SWITCH (SW1) IN THE "ON" POSITION. IF NO VOLTAGE IS PRESENT, THE POWER SWITCH (SW1) IS DEFECTIVE, REPLACE.

A2. IF VOLTAGE IS PRESENT ON TERMINAL #28 (120 VOLTS) THEN CHECK FOR VOLTAGE ON TERMINAL #29 (120 VOLTS) WHILE HOLDING THE POWER SWITCH (SW1) IN THE "ON" POSITION. IF NO VOLTAGE IS PRESENT, THE PLENUM HIGH LIMIT MAY HAVE TRIPPED FROM EXCESSIVE HEAT IN THE PLENUM CHAMBER, RESET. IF VOLTAGE IS PRESENT ON TERMINAL #29 (120 VOLTS) THE PLENUM HIGH LIMIT LIGHT (DS2) IS DEFECTIVE, REPLACE. *(FOR ALL MODELS, REFER TO THE "AUTOMATIC TEMPERATURE CONTROL" SECTION FOR OPERATION AND A TROUBLE SHOOTING GUIDE FOR THE TEMPERATURE/HIGH LIMIT SYSTEM)*

A3. IF VOLTAGE IS PRESENT ON TERMINAL #29 (120 VOLTS) THEN CHECK FOR VOLTAGE ON TERMINAL #30 (120 VOLTS) WHILE HOLDING THE POWER SWITCH (SW1) IN THE "ON" POSITION. IF NO VOLTAGE IS PRESENT, ONE OR MORE FAN STARTER OVERLOADS (S1 THRU S4) MAY HAVE TRIPPED FROM A MOTOR DRAWING HIGH AMPERAGE. DETERMINE WHICH ONE IS OPEN. RESET TRIPPED OVERLOAD. *IT WILL BE NECESSARY TO DETERMINE IF A SHORT CIRCUIT OR OVERLOAD CONDITION EXISTS IN THIS SYSTEM AND WHAT CORRECTIVE STEPS NEED TO BE TAKEN TO RESOLVE THIS CONDITION.* IF VOLTAGE IS PRESENT ON TERMINAL #30 (120 VOLTS) THE FAN OVERLOAD LIGHT (DS3) IS DEFECTIVE, REPLACE.

A4. IF VOLTAGE IS PRESENT ON TERMINAL #30 (120 VOLTS) THEN CHECK FOR VOLTAGE ON TERMINAL #31 (120 VOLTS) WHILE HOLDING THE POWER SWITCH (SW1) IN THE "ON" POSITION. IF NO VOLTAGE IS PRESENT, ONE OR MORE CONVEYOR STARTER OVERLOADS (S5 THRU S8) MAY HAVE TRIPPED FROM A MOTOR DRAWING HIGH AMPERAGE. DETERMINE WHICH ONE IS OPEN. RESET TRIPPED OVERLOAD. *IT WILL BE NECESSARY TO DETERMINE IF A SHORT CIRCUIT OR OVERLOAD CONDITION EXISTS IN THIS SYSTEM AND WHAT CORRECTIVE STEPS NEED TO BE TAKEN TO RESOLVE THIS CONDITION.* IF VOLTAGE IS PRESENT ON TERMINAL #31 (120 VOLTS) THE CONVEYOR OVERLOAD LIGHT (DS4) IS DEFECTIVE, REPLACE.

A5. *(NOTE: THE FEEDROLL MONITOR IS MEANT TO OPERATE WHILE THE METERING SYSTEM IS OPERATING. IF NOT, THE FEEDROLL MONITOR SELECTOR SWITCH (SW7) SHOULD BE IN THE "OFF" POSITION. ALSO, POWER IS NOT SUPPLIED TO THE FEEDROLL MONITOR SELECTOR SWITCH (SW7) UNTIL THE UNLOAD LOAD SWITCH (SW5) IS "ON".)* WITH THE FEEDROLL SELECTOR SWITCH IN THE "OFF" POSITION, IF VOLTAGE IS PRESENT ON TERMINAL #31 (120 VOLTS) THEN CHECK FOR VOLTAGE ON TERMINAL #32 (120 VOLTS) WHILE HOLDING THE POWER SWITCH (SW1) IN THE "ON" POSITION. IF NO VOLTAGE IS PRESENT, ONE OR BOTH OF THE TIME DELAY RELAYS (K10 & K11) ARE DEFECTIVE. REPLACE. WITH THE METERING SYSTEM OPERATING AND THE FEEDROLL MONITOR SELECTOR SWITCH (SW7) "ON", IF DRYER SHUTS DOWN WITHIN 60 SECONDS, CHECK VOLTAGE (120 VOLTS) ON TERMINALS #62 AND #63. VOLTAGE SHOULD BE PRESENT ON EACH TERMINAL ABOUT EVERY 2 TO

4 SECONDS WHILE THE FEEDROLLS ARE TURNING. IF VOLTAGE IS NOT PRESENT ON BOTH TERMINALS CHECK FEEDROLL MONITOR SWITCH (SW8) FOR CORRECT OPERATION AND CAM NUT ADJUSTMENT LOCATED ON FEEDROLL SPROCKET. ADJUST CAM NUT OR REPLACE FEEDROLL MONITOR SWITCH (SW8). IF VOLTAGE IS PRESENT, CHECK THE TIME DELAY RELAYS (K10 & K11) FOR PROPER OPERATION AND SETTING (60 SEC.). SET TO 60 SECONDS OR REPLACE IF DEFECTIVE.

A6. IF VOLTAGE IS PRESENT ON TERMINAL #32 (120 VOLTS THEN CHECK FOR VOLTAGE ON TERMINAL #33 (120 VOLTS) WHILE HOLDING THE POWER SWITCH (SW1) IN THE "ON" POSITION. IF NO VOLTAGE IS PRESENT, CHECK THE DISCHARGE OVERFLOW SWITCH FOR CORRECT OPERATION OR IF AN OVERFLOW CONDITION HAS TRIPPED THE SWITCH. CLEAR THE OVERFLOW OR REPLACE THE SWITCH. IF VOLTAGE IS PRESENT ON TERMINAL #33 (120 VOLTS) THE DISCHARGE OVERFLOW LIGHT (DS6) IS DEFECTIVE, REPLACE.

A7. IF VOLTAGE IS PRESENT ON TERMINAL #33 (120 VOLTS) THEN CHECK FOR VOLTAGE ON TERMINAL #34 (120 VOLTS) WHILE HOLDING THE POWER SWITCH (SW1) IN THE "ON" POSITION. IF NO VOLTAGE IS PRESENT ONE OF THE EXHAUST TEMPERATURE LIMITS HAS TRIPPED BECAUSE OF EXCESSIVE EXHAUST AIR TEMPERATURE OR IS DEFECTIVE. WITH THE POWER SWITCH (SW1) HELD IN THE "ON" POSITION GO AROUND THE DRYER AND FIND WHICH IS THE FIRST LIGHT ON THE EXHAUST LIMIT BOXES THAT IS NOT LIT. THIS IS THE EXHAUST LIMIT OPENING THE CIRCUIT. CHECK VOLTAGE AT EXHAUST LIMIT. IF DEFECTIVE, REPLACE. IF VOLTAGE IS PRESENT ON TERMINAL #34 (120 VOLTS) THE EXHAUST TEMPERATURE LIMIT LIGHT (DS7) IS DEFECTIVE, REPLACE.

A8. THE AUXILIARY SAFETY LIGHT WOULD BE INSTALLED AS A SPECIAL OPTION AT THE CUSTOMERS REQUEST. IF VOLTAGE IS PRESENT ON TERMINAL #35 (120 VOLTS) THE AUXILIARY SAFETY LIGHT (DS8) IS DEFECTIVE, REPLACE.

A9. IF VOLTAGE IS PRESENT ON TERMINAL #35 (120 VOLTS) THEN CHECK FOR VOLTAGE ON TERMINAL #39 (120 VOLTS) WHILE HOLDING THE POWER SWITCH (SW1) IN THE "ON" POSITION AND WITH THE BURNER SWITCH (SW3) IN THE "OFF" POSITION. IF NO VOLTAGE IS PRESENT, THE BURNER SWITCH (SW3) IS DEFECTIVE, REPLACE.

A10. IF VOLTAGE IS PRESENT ON TERMINAL #39 (120 VOLTS) THEN CHECK FOR VOLTAGE ON TERMINAL #41 (120 VOLTS) WHILE HOLDING THE POWER SWITCH (SW1) IN THE "ON" POSITION. IF NO VOLTAGE IS PRESENT AND THE BURNER SWITCH (SW3) IS IN THE "OFF" POSITION, THE POWER RELAY (K8) IS DEFECTIVE, REPLACE.

A11. IF VOLTAGE IS PRESENT ON TERMINAL #41 (120 VOLTS) WHILE HOLDING THE POWER SWITCH (SW1) IN THE "ON" POSITION AND THE BURNER SWITCH (SW3) IS IN THE

"OFF" POSITION, THE SAFETY CIRCUIT PROVEN LIGHT IS DEFECTIVE, REPLACE.

B. IF VOLTAGE IS PRESENT ON TERMINAL #41 (120 VOLTS) CHECK VOLTAGE AT TERMINAL #27 WITH POWER SWITCH (SW1) ENGAGED (CENTER POSITION). IF POWER IS NOT PRESENT ON TERMINAL #27 THE FLAME SYSTEM BYPASS DELAY RELAY IS DEFECTIVE, REPLACE.

NOTE: DELUX PROVIDES THREE (3) TYPES OF LOADING SYSTEMS.

A. LEVELING SYSTEM.(STANDARD) (AUGER STANDARD) (DRAG CONVEYOR OPTIONAL)
B. GRAVITY FLOW WITHOUT HIGH AND LOW BIN SWITCHES. (OPTIONAL)
C. GRAVITY FLOW WITH HIGH AND LOW BIN SWITCHES. (OPTIONAL)

3A. SEQUENCE: LOAD SWITCH (SW4) TO "ON", ENERGIZING LOAD CIRCUIT. LEVELING SYSTEM (STANDARD)

ACTION: LOAD SWITCH (SW4) "ON", GRAIN LOADING LIGHT (DS12) "ON" STARTS LEVELING AUGER (CONVEYOR) ON DRYER AND WET AUXILIARY LOADING. LOADS DRYER AUTOMATICALLY AS REQUIRED. GRAIN LOADING LIGHT (DS12) "ON" UNTIL HIGH / LOW GRAIN MONITOR SHUTS LOAD AUGER "OFF". LOW GRAIN LIGHT(S) (DS9, DS10) "ON" UNTIL GRAIN ENGAGES PADDLE(S) ON LOW GRAIN SWITCH(S) (SW9, SW10).

SYMPTOMS:
A. NO GRAIN LOADING LIGHT (DS12).
B. GRAIN LOADING LIGHT (DS12) "ON" BUT LOADING SYSTEM NOT RUNNING.
C. DRYER SHUTS DOWN IMMEDIATELY OR DURING LOADING OPERATION.
D. LOW GRAIN LIGHT(S) (DS9, DS10) STAY LIT.
E. LEVELING AUGER AND AUXILIARY LOADING RUN CONTINUALLY.
F. DRYER OVERLOADS (TOO FULL).

POSSIBLE CAUSES:
A1. DEFECTIVE LOAD SWITCH (SW4).
A2. DEFECTIVE SWITCH (LOW) IN HIGH / LOW GRAIN MONITOR.
A3. DEFECTIVE GRAIN LOADING LIGHT (DS12).

B1. DEFECTIVE LOAD AUGER STARTER COIL (S5).
B2. DEFECTIVE LOAD AUGER STARTER INTERLOCK (SW19).
B3. DEFECTIVE AUXILIARY LOAD STARTER COIL (S6).

C. OVERLOAD(S) ON LOAD AUGER AND/OR AUXILIARY LOAD STARTER(S) (S5, S6) TRIPPED.

D1. GRAIN HAS NOT ENGAGED PADDLES PROPERLY ON LOW GRAIN SWITCH(S) (SW9, SW10).
D2. DEFECTIVE LOW GRAIN SWITCH(S) (SW9, SW10).

E. IMPROPER GRAIN LOADING RATE.

F. IMPROPER ADJUSTMENT OF HIGH / LOW GRAIN MONITOR.

CORRECTIVE ACTION:

A1. IF VOLTAGE IS PRESENT ON TERMINAL #39 (120 VOLTS), TURN LOAD SWITCH (SW4) TO "ON" THEN CHECK FOR VOLTAGE ON TERMINAL #46. IF VOLTAGE IS NOT PRESENT THE LOAD SWITCH (SW4) IS DEFECTIVE, REPLACE.

A2. IF VOLTAGE IS PRESENT ON TERMINAL #46 (120 VOLTS), THEN CHECK FOR VOLTAGE ON TERMINAL #47. NOTE: MAKE SURE HIGH / LOW GRAIN MONITOR PADDLE IS HANGING IN THE DOWN POSITION. IF VOLTAGE IS NOT PRESENT THE SWITCH (LOW) IS DEFECTIVE, REPLACE.

A3. IF VOLTAGE IS PRESENT ON TERMINAL #47 (120 VOLTS), THE GRAIN LOADING LIGHT (DS12) IS DEFECTIVE, REPLACE.

B1. IF LOAD AUGER STARTER (S5) DOES NOT PULL-IN AND VOLTAGE IS PRESENT AT LOAD SIDE OF COIL, THE HOLDING COIL IS DEFECTIVE, REPLACE.

B2. IF LOAD AUGER STARTER (S5) DOES PULL-IN, CHECK LOAD SIDE OF INTERLOCK (SW19) ON LOAD AUGER STARTER (S5) FOR PRESENCE OF VOLTAGE (120 VOLTS). IF VOLTAGE IS PRESENT AT LOAD SIDE OF INTERLOCK (SW19), CHECK OPPOSITE SIDE OF INTERLOCK (SW19). IF NO POWER IS PRESENT, THE INTERLOCK (SW19) IS DEFECTIVE, REPLACE.

B3. IF AUXILIARY LOAD STARTER (S6) DOES NOT PULL-IN AND VOLTAGE IS PRESENT AT LOAD SIDE OF COIL, THE HOLDING COIL IS DEFECTIVE, REPLACE.

C. OVERLOADS ON LOAD AUGER AND/OR AUXILIARY LOAD STARTERS (S5, S6) MAY HAVE TRIPPED FROM A MOTOR DRAWING HIGH AMPERAGE. DETERMINE WHICH ONE IS OPEN. RESET DEFECTIVE OVERLOAD. IT WILL BE NECESSARY TO DETERMINE IF A SHORT CIRCUIT OR EXCESSIVE OVERLOAD CONDITION EXISTS IN THIS ISOLATED SYSTEM AND WHAT CORRECTIVE STEPS NEED TO BE TAKEN TO RESOLVE THIS CONDITION. OTHER POSSIBLE CAUSES COULD BE (1) BAD MOTOR, REPLACE. (2) JAMMED AUXILIARY LOAD SYSTEM, CORRECT. (3) LOOSE WIRING CONNECTIONS ON TERMINALS, TIGHTEN. (4) DEFECTIVE OVERLOAD, REPLACE. (5) IMPROPER ADJUSTMENT OF HIGH / LOW GRAIN MONITOR, (AUGER ONLY) ADJUST TILT SWITCHES (LOW AND/OR HIGH) IN HIGH / LOW GRAIN MONITOR BOX. ADJUST LOW TILT SWITCH SO THAT THE LOAD SYSTEM WILL TURN "ON" JUST BEFORE THE GRAIN PADDLE SWINGS TO A STRAIGHT DOWN POSITION. ADJUST HIGH TILT SWITCH SO THAT THE LOAD SYSTEM WILL TURN "OFF" WHEN THE GRAIN PUSHES THE PADDLE FORWARD TO 40° ANGLE.

D1. TRASH AND PLUGGING PROBLEM - CHECK LOW GRAIN SWITCH(S) (SW9, SW10) FOR TRASH BUILDUP BEHIND PADDLE.

D2A. FRONT LOW GRAIN SWITCH (SW9). IF VOLTAGE (120 VOLTS) IS PRESENT ON TERMINAL #35 CHECK VOLTAGE ON

TERMINAL #37 WITH SWITCH PADDLE ENGAGED. IF VOLTAGE IS NOT PRESENT THE LOW GRAIN SWITCH FRONT (SW9) IS DEFECTIVE, REPLACE.

D2B. REAR LOW GRAIN SWITCH (SW10). IF VOLTAGE (120 VOLTS) IS PRESENT ON TERMINAL #37 CHECK VOLTAGE ON TERMINAL #39 WITH SWITCH PADDLE ENGAGED. IF VOLTAGE IS NOT PRESENT THE LOW GRAIN SWITCH REAR (SW10) IS DEFECTIVE, REPLACE.

E. CHECK FOR EMPTY WET GRAIN SUPPLY. CHECK AUXILIARY LOAD SYSTEM FOR PLUGGING, BROKEN BELT, IMPROPER FLOW RATE, UNDERSIZED LOAD SYSTEM, ETC. THAT MAY RESTRICT GRAIN FLOW TO DRYER.

F. ADJUST TILT SWITCHES (LOW AND/OR HIGH) IN HIGH / LOW GRAIN MONITOR BOX (AUGER ONLY). ADJUST LOW TILT SWITCH SO THAT THE LOAD SYSTEM WILL TURN "ON" JUST BEFORE THE GRAIN PADDLE SWINGS TO A STRAIGHT DOWN POSITION. ADJUST HIGH TILT SWITCH SO THAT THE LOAD SYSTEM WILL TURN "OFF" WHEN THE GRAIN PUSHES THE PADDLE FORWARD TO 40° ANGLE.

3B. SEQUENCE: LOAD SWITCH (SW4) TO "ON", ENERGIZING LOAD CIRCUIT. GRAVITY FLOW <u>WITHOUT</u> HIGH AND LOW BIN SWITCHS. (OPTIONAL)

ACTION: LOAD SWITCH (SW4) "ON", GRAIN LOADING LIGHT (DS12) "ON" STARTS WET AUXILIARY LOADING. LOW GRAIN LIGHT(S) (DS9, DS10) "ON" UNTIL GRAIN ENGAGES PADDLE(S) ON LOW GRAIN SWITCH(S) (SW9, SW10)

SYMPTOMS:
A. NO GRAIN LOADING LIGHT (DS12).
B. GRAIN LOADING LIGHT (DS12) "ON" BUT LOADING SYSTEM NOT RUNNING.
C. DRYER SHUTS DOWN IMMEDIATELY OR DURING LOADING OPERATION.
D. LOW GRAIN LIGHT(S) (DS9, DS10) STAY LIT.

POSSIBLE CAUSES:
A1. DEFECTIVE LOAD SWITCH (SW4).
A2. DEFECTIVE GRAIN LOADING LIGHT (DS12).

B. DEFECTIVE AUXILIARY LOAD STARTER COIL (S6).

C. OVERLOAD ON AUXILIARY LOAD STARTER (S6) TRIPPED.

D1. GRAIN HAS NOT ENGAGED PADDLES PROPERLY ON LOW GRAIN SWITCH(S) (SW9, SW10).
D2. DEFECTIVE LOW GRAIN SWITCH(S) (SW9, SW10).
D3. IMPROPER GRAIN LOADING RATE.

CORRECTIVE ACTION:
A1. IF VOLTAGE IS PRESENT ON TERMINAL #39 (120 VOLTS), TURN LOAD SWITCH (SW4) TO "ON" THEN CHECK FOR VOLTAGE ON TERMINAL #46. IF VOLTAGE IS NOT PRESENT THE LOAD SWITCH (SW4) IS DEFECTIVE, REPLACE.

A2. IF VOLTAGE IS PRESENT ON TERMINAL #47 (120 VOLTS), THE GRAIN LOADING LIGHT (DS12) IS DEFECTIVE, REPLACE.

B. IF AUXILIARY LOAD STARTER (S6) DOES NOT PULL IN AND VOLTAGE IS PRESENT AT LOAD SIDE OF COIL, THE HOLDING COIL IS DEFECTIVE, REPLACE.

C. OVERLOAD ON AUXILIARY LOAD STARTER (S6) MAY HAVE TRIPPED FROM A MOTOR DRAWING HIGH AMPERAGE. RESET DEFECTIVE OVERLOAD. IT WILL BE NECESSARY TO DETERMINE IF A SHORT CIRCUIT OR EXCESSIVE OVERLOAD CONDITION EXISTS IN THIS ISOLATED SYSTEM AND WHAT CORRECTIVE STEPS NEED TO BE TAKEN TO RESOLVE THIS CONDITION. OTHER POSSIBLE CAUSES COULD BE (1) BAD MOTOR, REPLACE. (2) JAMMED AUXILIARY LOAD SYSTEM, CORRECT. (3) LOOSE WIRING CONNECTIONS ON TERMINALS, TIGHTEN. (4) DEFECTIVE OVERLOAD, REPLACE.

D1. TRASH AND PLUGGING PROBLEM - CHECK LOW GRAIN SWITCH(S) (SW9, SW10) FOR TRASH BUILDUP BEHIND PADDLE.

D2A. FRONT LOW GRAIN SWITCH (SW9). IF VOLTAGE (120 VOLTS) IS PRESENT ON TERMINAL #35 CHECK VOLTAGE ON TERMINAL #37 WITH SWITCH PADDLE ENGAGED. IF VOLTAGE IS NOT PRESENT THE LOW GRAIN SWITCH FRONT (SW9) IS DEFECTIVE, REPLACE.

D2B. REAR LOW GRAIN SWITCH (SW10). IF VOLTAGE (120 VOLTS) IS PRESENT ON TERMINAL #37 CHECK VOLTAGE ON TERMINAL #39 WITH SWITCH PADDLE ENGAGED. IF VOLTAGE IS NOT PRESENT THE LOW GRAIN SWITCH REAR (SW10) IS DEFECTIVE, REPLACE.

D3. CHECK FOR EMPTY WET GRAIN SUPPLY. CHECK AUXILIARY LOAD SYSTEM FOR PLUGGING, BROKEN BELT, IMPROPER FLOW RATE, UNDERSIZED LOAD SYSTEM, ETC. THAT MAY RESTRICT GRAIN FLOW TO DRYER.

3C. SEQUENCE: LOAD SWITCH (SW4) TO "ON", ENERGIZING LOAD CIRCUIT. GRAVITY FLOW <u>WITH</u> HIGH AND LOW BIN SWITCHES. (OPTIONAL)

ACTION: LOAD SWITCH (SW4) "ON", GRAIN LOADING LIGHT (DS12) "ON" STARTS WET AUXILIARY LOADING. LOADS DRYER AUTOMATICALLY AS REQUIRED. GRAIN LOADING LIGHT (DS12) "ON" UNTIL GRAIN LEVEL CONTROL SWITCH(S) (HIGH) SHUTS AUXILIARY LOAD SYSTEM "OFF" . LOW GRAIN LIGHT(S) (DS9, DS10) "ON" UNTIL GRAIN ENGAGES PADDLE(S) ON LOW GRAIN SWITCH(S) (SW9, SW10). NOTE: OPERATION OF GRAIN LEVEL CONTROL LIGHTS (1) LOW LIGHT (DS31) "OFF" UNTIL GRAIN ENGAGES PADDLE. (2) HIGH LIGHT(S) (DS29, DS30) "OFF" UNTIL GRAIN ENGAGES PADDLES SHUTTING "OFF" LOAD SYSTEM.

SYMPTOMS: A. NO GRAIN LOADING LIGHT (DS12).

B. GRAIN LOADING LIGHT (DS12) "ON" BUT LOADING SYSTEM NOT RUNNING.
C. DRYER SHUTS DOWN IMMEDIATELY OR DURING LOADING OPERATION.
D. LOW GRAIN LIGHT(S) (DS9, DS10) STAY LIT.
E. NO (LOW) GRAIN LOADING LIGHT (DS31).
F. NO (HIGH) GRAIN LOADING LIGHT(S) (DS29, DS30).
G. AUXILIARY LOADING RUNNING CONTINUALLY.

POSSIBLE CAUSES:

A1. DEFECTIVE LOAD SWITCH (SW4).
A2. DEFECTIVE (LOW) GRAIN LEVEL CONTROL SWITCH (SW13).
A3. DEFECTIVE GRAIN LOADING LIGHT (DS12).

B. DEFECTIVE AUXILIARY LOAD STARTER(S) COIL.

C1. DEFECTIVE LOAD AUGER STARTER INTERLOCK.
C2. OVERLOAD(S) ON AUXILIARY LOAD STARTER(S) TRIPPED.

D1. GRAIN HAS NOT ENGAGED PADDLES PROPERLY ON LOW GRAIN SWITCH(S) (SW9, SW10).
D2. DEFECTIVE LOW GRAIN SWITCH(S) (SW9, SW10).
D3. IMPROPER GRAIN LOADING RATE.

E1. GRAIN HAS NOT ENGAGED PADDLE PROPERLY ON (LOW) GRAIN LEVEL CONTROL SWITCH (SW13).
E2. DEFECTIVE (LOW) GRAIN LEVEL CONTROL SWITCH (SW13). DEFECTIVE (LOW) GRAIN LEVEL CONTROL LIGHT (DS31).
E3. IMPROPER GRAIN LOADING RATE.

F1. GRAIN HAS NOT ENGAGED PADDLES PROPERLY ON (HIGH) GRAIN LEVEL CONTROL SWITCH(S) (SW11, SW12).
F2. DEFECTIVE (HIGH) GRAIN LEVEL CONTROL SWITCH(S) (SW11, SW12). DEFECTIVE (HIGH) GRAIN LEVEL CONTROL LIGHT(S) (DS29, DS30).
F3. IMPROPER GRAIN LOADING RATE.

G. IMPROPER GRAIN LOADING RATE.

CORRECTIVE ACTION:

A1. IF VOLTAGE IS PRESENT ON TERMINAL #39 (120 VOLTS), TURN LOAD SWITCH (SW4) TO "ON" THEN CHECK FOR VOLTAGE ON TERMINAL #46. IF VOLTAGE IS NOT PRESENT THE LOAD SWITCH (SW4) IS DEFECTIVE, REPLACE.

A2. IF VOLTAGE IS PRESENT ON TERMINAL #46 (120 VOLTS), THEN CHECK FOR VOLTAGE ON TERMINAL #47, WITH SWITCH PADDLE ENGAGED. IF VOLTAGE IS NOT PRESENT THE (LOW) GRAIN LEVEL CONTROL SWITCH (SW13) IS DEFECTIVE, REPLACE.

A3. IF VOLTAGE IS PRESENT ON TERMINAL #47 (120 VOLTS), THE GRAIN LOADING LIGHT (DS12) IS DEFECTIVE, REPLACE.
B. IF AUXILIARY LOAD STARTER(S) DOES NOT PULL IN AND VOLTAGE IS PRESENT AT LOAD SIDE OF COIL, THE HOLDING COIL IS DEFECTIVE, REPLACE.

C1. IF AUXILIARY LOAD STARTER(S) DOES PULL IN, CHECK LOAD SIDE OF INTERLOCK ON AUXILIARY LOAD STARTER FOR PRESENCE OF VOLTAGE (120 VOLTS). IF VOLTAGE IS PRESENT AT LOAD SIDE OF INTERLOCK, CHECK OPPOSITE SIDE OF INTERLOCK. IF NO VOLTAGE IS PRESENT, THE INTERLOCK IS DEFECTIVE, REPLACE.

C2. OVERLOADS ON AUXILIARY LOAD STARTER(S) MAY HAVE TRIPPED FROM A MOTOR DRAWING HIGH AMPERAGE. DETERMINE WHICH ONE IS OPEN. RESET DEFECTIVE OVERLOAD. IT WILL BE NECESSARY TO DETERMINE IF A SHORT CIRCUIT OR EXCESSIVE OVERLOAD CONDITION EXISTS IN THIS ISOLATED SYSTEM AND WHAT CORRECTIVE STEPS NEED TO BE TAKEN TO RESOLVE THIS CONDITION. OTHER POSSIBLE CAUSES COULD BE (1) BAD MOTOR, REPLACE. (2) JAMMED AUXILIARY LOAD SYSTEM, CORRECT. (3) LOOSE WIRING CONNECTIONS ON TERMINALS, TIGHTEN. (4) DEFECTIVE OVERLOAD, REPLACE.

D1. TRASH AND PLUGGING PROBLEM - CHECK LOW GRAIN SWITCH(S) (SW9, SW10) FOR TRASH BUILDUP BEHIND PADDLE.

D2A. FRONT LOW GRAIN SWITCH (SW9). IF VOLTAGE (120 VOLTS) IS PRESENT ON TERMINAL #35 CHECK VOLTAGE ON TERMINAL #37 WITH SWITCH PADDLE ENGAGED. IF VOLTAGE IS NOT PRESENT THE LOW GRAIN SWITCH FRONT (SW9) IS DEFECTIVE, REPLACE.

D2B. REAR LOW GRAIN SWITCH (SW10). IF VOLTAGE (120 VOLTS) IS PRESENT ON TERMINAL #37 CHECK VOLTAGE ON TERMINAL #39 WITH SWITCH PADDLE ENGAGED. IF VOLTAGE IS NOT PRESENT THE LOW GRAIN SWITCH REAR (SW10) IS DEFECTIVE, REPLACE.

D3. CHECK FOR EMPTY WET GRAIN SUPPLY. CHECK AUXILIARY LOAD SYSTEM FOR PLUGGING, BROKEN BELT, IMPROPER FLOW RATE, UNDERSIZED LOAD SYSTEM, ETC. THAT MAY RESTRICT GRAIN FLOW TO DRYER.

E1. TRASH AND PLUGGING PROBLEM - CHECK (LOW) GRAIN LEVEL CONTROL SWITCH (SW13) FOR TRASH BUILDUP BEHIND PADDLE.

E2. IF VOLTAGE (120 VOLTS) IS PRESENT ON TERMINAL #46, CHECK VOLTAGE ON TERMINAL #52 WITH SWITCH PADDLE ENGAGED. IF VOLTAGE IS NOT PRESENT THE (LOW) GRAIN LEVEL CONTROL SWITCH (SW13) IS DEFECTIVE, REPLACE. IF VOLTAGE IS PRESENT, (LOW) GRAIN LEVEL CONTROL LIGHT (DS31) IS DEFECTIVE, REPLACE.

E3. CHECK FOR EMPTY WET GRAIN SUPPLY. CHECK AUXILIARY LOAD SYSTEM FOR PLUGGING, BROKEN BELT, IMPROPER FLOW RATE, UNDERSIZED LOAD SYSTEM, ETC. THAT MAY RESTRICT GRAIN FLOW TO DRYER.

F1. TRASH AND PLUGGING PROBLEM - CHECK (HIGH) GRAIN LEVEL CONTROL SWITCH(S) (SW11, SW12) FOR TRASH BUILDUP BEHIND PADDLE.

F2A. (HIGH - FRONT) GRAIN LEVEL CONTROL SWITCH. IF VOLTAGE (120 VOLTS) IS PRESENT ON TERMINAL #46, CHECK VOLTAGE ON TERMINAL #50 WITH SWITCH PADDLE ENGAGED. IF VOLTAGE IS NOT PRESENT THE (HIGH - FRONT) GRAIN LEVEL CONTROL SWITCH (SW11) IS DEFECTIVE, REPLACE. IF VOLTAGE IS PRESENT, (HIGH - FRONT) GRAIN LEVEL CONTROL LIGHT (DS29) IS DEFECTIVE, REPLACE.

F2B. (HIGH - REAR) GRAIN LEVEL CONTROL SWITCH. IF VOLTAGE (120 VOLTS) IS PRESENT ON TERMINAL #46, CHECK VOLTAGE ON TERMINAL #51 WITH SWITCH PADDLE ENGAGED. IF VOLTAGE IS NOT PRESENT THE (HIGH - REAR) GRAIN LEVEL CONTROL SWITCH (SW12) IS DEFECTIVE, REPLACE. IF VOLTAGE IS PRESENT, (HIGH - REAR) GRAIN LEVEL CONTROL LIGHT (DS30) IS DEFECTIVE, REPLACE.

F3. CHECK FOR EMPTY WET GRAIN SUPPLY. CHECK AUXILIARY LOAD SYSTEM FOR PLUGGING, BROKEN BELT, IMPROPER FLOW RATE, UNDERSIZED LOAD SYSTEM, ETC. THAT MAY RESTRICT GRAIN FLOW TO DRYER.

G. CHECK FOR EMPTY WET GRAIN SUPPLY. CHECK AUXILIARY LOAD SYSTEM FOR PLUGGING, BROKEN BELT, IMPROPER FLOW RATE, UNDERSIZED LOAD SYSTEM, ETC. THAT MAY RESTRICT GRAIN FLOW TO DRYER.

4. SEQUENCE: FAN SWITCH (SW2) TO "ON", HOLD UNTIL ALL FANS ARE OPERATIONAL.

ACTION: FAN STARTER(S) (S1, S2, S3, S4) START AND LOCK INTO OPERATION (5 SECONDS DELAY BETWEEN FANS ON MULTI FAN UNITS). ALL FAN PROVEN LIGHT(S) "ON" (DS13, DS14, DS15, DS16), AFTER A 10 SECOND DELAY THE PURGING LIGHT (DS17) WILL LIGHT AND AFTER 60 SECONDS THE BURNER READY LIGHT (DS18) WILL LIGHT.

NOTE: FAN NUMBER ONE (# 1) IS CLOSEST TO CONTROL PANEL.

SYMPTOMS:
A. DRYER SHUTS DOWN IMMEDIATELY OR DURING FAN(S) (S1, S2, S3, S4) STARTUP.
B. FAN STARTER(S) (S1, S2, S3, S4) WILL NOT LOCK INTO OPERATION WHEN FAN SWITCH (SW2) IS RELEASED.
C. SOME OR NONE OF THE FAN PROVEN LIGHT(S) (DS13, DS14, DS15, DS16) STAY LIT, AFTER THE FAN STARTER(S) (S1, S2, S3, S4) LOCK INTO OPERATION.
D. PURGING LIGHT (DS17) WILL NOT LIGHT.
E. BURNER READY LIGHT (DS18) WILL NOT LIGHT.

POSSIBLE CAUSES:
A1. OVERLOAD(S) ON FAN STARTER(S) (S1, S2, S3, S4), TRIPPED.

A2. FAN AIR SENSOR(S) (AS1, AS2, AS3, AS4), SHORTED.
A3. MISC. SHORT CIRCUIT(S) IN SYSTEM.

B1. DEFECTIVE FAN SWITCH (SW2).
B2. DEFECTIVE STARTER COIL (S1, S2, S3, S4).
B3. DEFECTIVE STARTER INTERLOCK (SW14, SW15, SW16, SW17).
B4. DEFECTIVE FAN TIMER (K13, K14, K15).

C1. INCORRECT FAN ROTATION.
C2. DEFECTIVE FAN AIR SENSOR (AS1).
DEFECTIVE FAN PROVEN LIGHT (DS13).
C3. DEFECTIVE FAN AIR SENSOR (AS2).
DEFECTIVE FAN PROVEN LIGHT (DS14).
C4. DEFECTIVE FAN AIR SENSOR (AS3).
DEFECTIVE FAN PROVEN LIGHT (DS15).
C5. DEFECTIVE FAN AIR SENSOR (AS4).
DEFECTIVE FAN PROVEN LIGHT (DS16).

D1. DEFECTIVE FAN SENSOR RELAY (K7).
DEFECTIVE PURGING LIGHT (DS17).

E1. DEFECTIVE PURGE RELAY (K9).
DEFECTIVE BURNER READY LIGHT (DS18).

CORRECTIVE ACTION:

NOTE: THE BURNER SWITCH (SW3) MUST BE IN "OFF" POSITION

A1. ONE OR MORE STARTER OVERLOADS (S1, S2, S3, S4) HAVE TRIPPED FROM A MOTOR DRAWING HIGH AMPERAGE. DETERMINE WHICH ONE IS OPEN. RESET TRIPPED OVERLOAD. IT WILL BE NECESSARY TO DETERMINE IF A SHORT CIRCUIT OR OVERLOAD CONDITION EXISTS IN THIS ISOLATED SYSTEM AND WHAT CORRECTIVE STEPS NEED TO BE TAKEN TO RESOLVE THIS CONDITION. OTHER POSSIBLE CAUSES COULD BE (1) BAD FAN STARTER OVERLOAD MODULE, REPLACE. (2) FAN PITCH SET TO HIGH, REPITCH TO CORRECT SETTING. (3) INCORRECT SETTING ON OVERLOAD, SET OVERLOAD TO MOTOR FULL LOAD AMPS. (4) LOOSE WIRING CONNECTIONS ON TERMINALS, TIGHTEN.

A2. CHECK THE TERMINATIONS INSIDE THE FAN AIR SENSOR(S) (AS1, AS2, AS3, AS4) TO INSURE THE SWITCH HAS NOT COME LOOSE OR THE TERMINALS ARE TIGHT AND A WIRE IS NOT SHORTING AGAINST THE CASE. THE FAN AIR SENSOR(S) (AS1, AS2, AS3, AS4) ARE LOCATED IN THE COOLING CHAMBER ON THE SIDE OF THE FAN DRUM.

A3. REPAIR OR REPLACE BURNED OR BARE WIRING IN CONTACT WITH CHASSIS OR OTHER WIRING.

B1. IF VOLTAGE IS PRESENT ON TERMINAL #39 (120 VOLTS) THEN CHECK FOR VOLTAGE ON TERMINAL #53 (120 VOLTS) WHILE HOLDING THE FAN SWITCH (SW2) IN THE "ON" POSITION. IF NO VOLTAGE IS PRESENT THE FAN SWITCH (SW2) IS DEFECTIVE, REPLACE. THE BURNER SWITCH (SW3) MUST BE IN "OFF" POSITION.

B2. IF FAN #1 DOES NOT PULL IN AND VOLTAGE IS PRESENT AT TERMINAL #53 (120 VOLTS), CHECK LOAD SIDE OF STARTER COIL FOR PRESENCE OF VOLTAGE WHEN FAN SWITCH (SW2) IS DEPRESSED. IF VOLTAGE IS PRESENT AT LOAD SIDE OF COIL ON STARTER (S1), THE HOLDING COIL IS DEFECTIVE AND MUST BE REPLACED. CHECK ALL COILS ON OTHER FAN STARTER(S) (S2, S3, S4) IN SEQUENCE TO FIND DEFECTIVE COIL AND REPLACE. NOTE: WHEN CHECKING COILS ON FAN STARTER(S) (S2, S3, S4) THE STARTER INTERLOCK(S) (SW15, SW16, SW17) ON THE PREVIOUS STARTER MUST PULL IN AND THE FAN TIMER(S) (K13, K14, K15) MUST TIME OUT TO SEE VOLTAGE PRESENT ON THE NEXT STARTER.

B3. IF FAN #1 PULLS IN, CHECK LOAD SIDE OF INTERLOCK (SW14) FOR PRESENCE OF VOLTAGE WHEN FAN SWITCH (SW2) IS DEPRESSED. IF VOLTAGE IS PRESENT AT LOAD SIDE OF INTERLOCK (SW14) CHECK OPPOSITE SIDE OF INTERLOCK (SW14). IF NO POWER IS PRESENT THE INTERLOCK (SW14) IS DEFECTIVE, REPLACE. CHECK ALL INTERLOCKS ON OTHER FAN STARTER(S) (S2, S3, S4) IN SEQUENCE TO FIND DEFECTIVE INTERLOCK AND REPLACE. NOTE: TO CHECK INTERLOCK(S) (SW15, SW16, SW17) ON OTHER FAN STARTER(S) (S2, S3, S4) STARTERS MUST BE PULLED IN.

B4. IF FAN #1 PULLS IN, CHECK LOAD SIDE OF FAN TIMER (K13) ON TERMINAL #2 (A1) LOCATED ON FAN TIMER PLUG-IN BASE. IF VOLTAGE IS PRESENT (120 VOLTS) THEN CHECK TERMINAL #3 LOCATED ON FAN TIMER (K13) PLUG-IN BASE, REMEMBER TO ALLOW THE TIMER TO TIME OUT BEFORE CHECKING VOLTAGE ON TERMINAL #3, IF VOLTAGE IS NOT PRESENT THE FAN TIMER (K13) IS DEFECTIVE, REPLACE. NOTE: TO CHECK OTHER TIMER(S) (K14, K15) FOLLOW THE SAME PROCEDURE.

C1. IF SOME OR NONE OF THE FAN PROVEN LIGHTS STAY LIT CHECK TO SEE IF THE FAN(S) ARE ROTATING IN THE CORRECT DIRECTION. WHEN ELECTRICAL SERVICE IS INSTALLED, ATTENTION MUST BE PAID TO PROPER PHASING. ALL MOTORS HAVE BEEN PHASED AT THE FACTORY. IN THE EVENT PHASES ARE REVERSED, SHUTOFF POWER ON MAIN BREAKER, REVERSE L1 AND L3 AT MAIN BREAKER. (WILD LEG MUST BE ON L2)

C2. IF VOLTAGE IS PRESENT ON TERMINAL #53 (120 VOLTS) THEN CHECK FOR VOLTAGE ON TERMINAL #54 (120 VOLTS) WHILE THE FAN(S) ARE LOCKED INTO OPERATION. IF NO VOLTAGE IS PRESENT THE FAN AIR SENSOR (AS1) IS DEFECTIVE, REPLACE. IF VOLTAGE IS PRESENT ON TERMINAL #54 THE FAN PROVEN LIGHT (DS13) IS DEFECTIVE, REPLACE.

C3. IF VOLTAGE IS PRESENT ON TERMINAL #54 (120 VOLTS) THEN CHECK FOR VOLTAGE ON TERMINAL #55 (120 VOLTS) WHILE THE FAN(S) ARE LOCKED INTO OPERATION. IF NO VOLTAGE IS PRESENT THE FAN AIR SENSOR (AS2) IS DEFECTIVE, REPLACE. IF VOLTAGE IS PRESENT ON

TERMINAL #55 THE FAN PROVEN LIGHT (DS14) IS DEFECTIVE, REPLACE.

C4. IF VOLTAGE IS PRESENT ON TERMINAL #55 (120 VOLTS) THEN CHECK FOR VOLTAGE ON TERMINAL #56 (120 VOLTS) WHILE THE FAN(S) ARE LOCKED INTO OPERATION. IF NO VOLTAGE IS PRESENT THE FAN AIR SENSOR (AS3) IS DEFECTIVE, REPLACE. IF VOLTAGE IS PRESENT ON TERMINAL #56 THE FAN PROVEN LIGHT (DS15) IS DEFECTIVE, REPLACE.

C5. IF VOLTAGE IS PRESENT ON TERMINAL #56 (120 VOLTS) THEN CHECK FOR VOLTAGE ON TERMINAL #57 (120 VOLTS) WHILE THE FAN(S) ARE LOCKED INTO OPERATION. IF NO VOLTAGE IS PRESENT THE FAN AIR SENSOR (AS4) IS DEFECTIVE, REPLACE. IF VOLTAGE IS PRESENT ON TERMINAL #57 THE FAN PROVEN LIGHT (DS16) IS DEFECTIVE, REPLACE.

D1. WITH FAN(S) RUNNING CHECK TO SEE IF VOLTAGE IS PRESENT ON TERMINAL #57 (120 VOLTS), THEN CHECK FOR VOLTAGE (120 VOLTS) ON TERMINAL #A1 (2) ON THE PURGE RELAY (K9), REMEMBER TO ALLOW THE FAN SENSOR RELAY (K7) TO TIME OUT (10 SEC) BEFORE CHECKING VOLTAGE ON TERMINAL #A1 (2) OF THE PURGE RELAY (K9), IF VOLTAGE IS NOT PRESENT THE FAN SENSOR RELAY (K7) IS DEFECTIVE, REPLACE. IF VOLTAGE (120 VOLTS) IS NOT PRESENT ON TERMINAL #59, AND PRESENT ON TERMINAL #A1 (2) OF THE PURGE RELAY (K9), PURGE RELAY IS DEFFECTIVE, REPLACE. IF VOLTAGE (120 VOLTS) IS PRESENT ON TERMINAL #59 BUT PURGING LIGHT (DS17) IS NOT LIT, PURGING LIGHT (DS17) IS DEFECTIVE, REPLACE.

E1. WITH FAN(S) RUNNING CHECK TO SEE IF VOLTAGE IS PRESENT ON TERMINAL #59 (120 VOLTS) BEFORE THE PURGE RELAY (K9) HAS TIMED OUT (60 SEC). THEN AFTER 60 SECONDS, CHECK FOR VOLTAGE ON TERMINAL #42 (120 VOLT). IF VOLTAGE IS NOT PRESENT, THE PURGE RELAY (K9) IS DEFECTIVE, REPLACE. IF VOLTAGE IS PRESENT, THE BURNER READY LIGHT (DS18) IS DEFECTIVE, REPLACE.

5. SEQUENCE: BURNER SWITCH (SW3) TO "ON", ENERGIZING BURNER CIRCUIT.

NOTE: REFER TO SCHEMATIC NUMBER: 900-010043 FOR BURNER CIRCUIT.

ACTION: FUEL SUPPLIED TO BURNERS. IGNITION FIRING LIGHT(S) (DS24, DS25, DS26, DS27) "ON" FOR 3-5 SECONDS, BURNER PROVEN LIGHT(S) (DS20, DS21, DS22, DS23) "ON".

SYMPTOMS:
A. DRYER SHUTS DOWN IMMEDIATELY UPON ENGAGING BURNER SWITCH (SW3).
B. RESET FLAME CONTROL LIGHT (DS28) "ON".
C. SOME OR NONE OF THE IGNITION FIRING LIGHT(S) (DS24, DS25, DS26, DS27) LIGHT.

D. SOME OR NONE OF THE BURNER PROVEN LIGHT(S) (DS20, DS21, DS22, DS23) STAY LIT.

E. ALL BURNER PROVEN LIGHT(S) (DS20, DS21, DS22, DS23) COME "ON" MOMENTARILY THEN DRYER SHUTS DOWN.

POSSIBLE CAUSES:

A1. LOW GRAIN SITUATION (LOW GRAIN LIGHT(S) (DS9, DS10) "ON" INDICATING LOW GRAIN). NOTE: BURNERS WILL NOT FIRE WIHTOUT DRYER BEING FULL OF GRAIN.

A2. DEFECTIVE LOW GRAIN SWITCH(S) (SW9, SW10).

A3. FLAME SYSTEM BYPASS DELAY RELAY (K5) IS SET TOO LOW (15 SEC).

A4. VAPOR CUTOFF VALVE COIL (SOL1) OR LIQUID CUTOFF VALVE COIL (SOL2) SHORTED.

B. FLAME FAILURE, SAFTEY LOCKOUT ON FLAME CONTROL(S) (FC1, FC2, FC3, FC4).

C1. DEFECTIVE BURNER SWITCH

C2A. DEFECTIVE FLAME CONTROL (FC1).
DEFECTIVE IGNITION FIRING LIGHT (DS24).

C2B. DEFECTIVE FLAME CONTROL (FC2).
DEFECTIVE IGNITION FIRING LIGHT (DS25).

C2C. DEFECTIVE FLAME CONTROL (FC3).
DEFECTIVE IGNITION FIRING LIGHT (DS26).

C2D. DEFECTIVE FLAME CONTROL (FC4).
DEFECTIVE IGNITION FIRING LIGHT (DS27).

D1. NO FUEL TO DRYER.

D2. PLUGGED FUEL LINE STRAINER.

D3. DEEFECTIVE VAPOR CUTOFF VALVE COIL (SOL1) OR LIQUID CUTOFF VALVE COIL (SOL2).

D4. DEFECTIVE PRESSURE REGULATOR.

D5. PLUGGED BURNER HOLES.

D6. LEAK IN GAS LINE TO BURNERS.

D7. DEFECTIVE IGNITION TRANSFORMER (XMFR 1), IGNITION PLUG, AND/OR IGNITION WIRE

D8. DEFECTIVE IGNITION TRANSFORMER (XMFR 2), IGNITION PLUG, AND/OR IGNITION WIRE

D9. DEFECTIVE IGNITION TRANSFORMER (XMFR 3), IGNITION PLUG, AND/OR IGNITION WIRE

D10. DEFECTIVE IGNITION TRANSFORMER (XMFR 4), IGNITION PLUG, AND/OR IGNITION WIRE

D11. DEFECTIVE BURNER PROVEN LIGHT (DS20), FLAME CONTROL (FC1), FLAME SENSOR, FLAME SENSOR WIRE, AND/OR BURNER GROUND WIRE.

D12. DEFECTIVE BURNER PROVEN LIGHT (DS21), FLAME CONTROL (FC2), FLAME SENSOR, FLAME SENSOR WIRE, AND/OR BURNER GROUND WIRE.

D13. DEFECTIVE BURNER PROVEN LIGHT (DS22), FLAME CONTROL (FC3), FLAME SENSOR, FLAME SENSOR WIRE, AND/OR BURNER GROUND WIRE.

D14. DEFECTIVE BURNER PROVEN LIGHT (DS23), FLAME CONTROL (FC4), FLAME SENSOR, FLAME SENSOR WIRE, AND/OR BURNER GROUND WIRE.

E1. DEFECTIVE FLAME RELAY (K1).

E2. DEFECTIVE FLAME RELAY (K2).

E3. DEFECTIVE FLAME RELAY (K3).
E4. DEFECTIVE BURNER RELAY (K6).

CORRECTIVE ACTION:

A1A. FILL DRYER FULL OF GRAIN.

A1B. TRASH AND PLUGGING PROBLEM - CHECK LOW GRAIN SWITCH(S) (SW9, SW10) FOR TRASH BUILDUP BEHIND PADDLE.

A2A. FRONT LOW GRAIN SWITCH (SW9). IF VOLTAGE (120 VOLTS) IS PRESENT ON TERMINAL #35 CHECK VOLTAGE ON TERMINAL #37 WITH SWITCH PADDLE ENGAGED. IF VOLTAGE IS NOT PRESENT THE LOW GRAIN SWITCH FRONT (SW9) IS DEFECTIVE, REPLACE.

A2B. REAR LOW GRAIN SWITCH (SW10). IF VOLTAGE (120 VOLTS) IS PRESENT ON TERMINAL #37 CHECK VOLTAGE ON TERMINAL #39 WITH SWITCH PADDLE ENGAGED. IF VOLTAGE IS NOT PRESENT THE LOW GRAIN SWITCH REAR (SW10) IS DEFECTIVE, REPLACE.

A3. SET FLAME SYSTEM BYPASS DELAY RELAY (K5) TO 15 SECONDS.

A4. INSPECT COILS (SOL1, SOL2) FOR BAD CONNECTIONS INSIDE COIL CASES OR DISCONNECT EACH COIL SEPARATELY AND CONNECT TO AN OUTSIDE 120 VOLT SOURCE AND LISTEN FOR THE VALVE TO PULL IN, IF NOT PULLING IN THE COIL IS DEFECTIVE, REPLACE. NOTE: TEST SHOULD BE PERFORMED WITH ALL POWER "OFF" TO DRYER.

B. MANUAL RESET IS REQUIRED, PUSH RESET BUTTON (BLACK) ON FLAME CONTROL(S) (FC1, FC2, FC3, FC4). FLAME CONTROLS ARE LOCATED ON INSIDE OF LARGE PANEL BOX DOOR. NOTE: WHEN RESETING FIREYE MODEL MicroM, BURNER SWITCH MUST BE TURNED ‘ON’(WITH DRYER IN ‘BURNER READY’ MODE).

C1. IF VOLTAGE IS NOT PRESENT ON TERMINAL #1 (120 VOLTS), WITH BURNER SWITCH (SW3) "ON" THE BURNER SWITCH (SW3) IS DEFECTIVE, REPLACE.

C2. IF VOLTAGE IS PRESENT ON TERMINAL #1 (120 VOLTS) WITH BURNER SWITCH (SW3) "ON":

C2A. CHECK FOR VOLTAGE ON TERMINAL #4 (THERE WILL BE A 4 TO 5 SECOND DELAY BEFORE VOLTAGE WILL BE PRESENT ON TERMINAL #4). IF VOLTAGE IS NOT PRESENT ON TERMINAL #4 THE FLAME CONTROL (FC1) IS DEFECTIVE, REPLACE. IF VOLTAGE IS PRESENT THE IGNITION FIRING LIGHT (DS24) IS DEFECTIVE, REPLACE.

C2B. CHECK FOR VOLTAGE ON TERMINAL #5 (THERE WILL BE A 4 TO 5 SECOND DELAY BEFORE VOLTAGE WILL BE PRESENT ON TERMINAL #5). IF VOLTAGE IS NOT PRESENT ON TERMINAL #5 THE FLAME CONTROL (FC2) IS DEFECTIVE, REPLACE.

IF VOLTAGE IS PRESENT THE IGNITION FIRING LIGHT (DS25) IS DEFECTIVE, REPLACE.

C2C. CHECK FOR VOLTAGE ON TERMINAL #6 (THERE WILL BE A 4 TO 5 SECOND DELAY BEFORE VOLTAGE WILL BE PRESENT ON TERMINAL #6). IF VOLTAGE IS NOT PRESENT ON TERMINAL #6 THE FLAME CONTROL (FC3) IS DEFECTIVE, REPLACE. IF VOLTAGE IS PRESENT THE IGNITION FIRING LIGHT (DS26) IS DEFECTIVE, REPLACE.

C2D. CHECK FOR VOLTAGE ON TERMINAL #7 (THERE WILL BE A 4 TO 5 SECOND DELAY BEFORE VOLTAGE WILL BE PRESENT ON TERMINAL #7). IF VOLTAGE IS NOT PRESENT ON TERMINAL #7 THE FLAME CONTROL (FC4) IS DEFECTIVE, REPLACE. IF VOLTAGE IS PRESENT THE IGNITION FIRING LIGHT (DS27) IS DEFECTIVE, REPLACE.

D1. CHECK FUEL SUPPLY TO DRYER, CHECK GAS PRESSURE, AND MANUAL VALVES "OPEN" ON DRYER. NOTE: ON L.P. UNITS ARE MANUAL VALVES OPEN AT TANK?

D2. REMOVE STRAINER AND CLEAN. (L.P. UNITS ONLY)

D3. **TEST SHOULD BE PERFORMED WITH POWER "OFF" TO DRYER**. INSPECT COILS (SOL1, SOL2) FOR BAD CONNECTIONS INSIDE COIL CASES OR DISCONNECT EACH COIL SEPARATELY AND CONNECT TO AN OUTSIDE 120 VOLT SOURCE AND LISTEN FOR THE VALVE TO PULL IN, IF NOT PULLING IN, THE COIL IS DEFECTIVE, REPLACE.

D4. ADJUST REGULATOR FOR 12 POUNDS OF GAS PRESSURE ON L.P. UNITS AND 10 POUNDS ON NATURAL GAS UNITS. IF NO PRESSURE IS PRESENT CALL YOUR LOCAL SUPPLIER.

D5A. INSPECT BURNER(S) FOR PLUGGED HOLES AND CLEAN. (BURNER HOLES ARE 5/64" DIAMETER). IF BURNER HOLES ARE OPEN IT MAY BE NECESSARY TO REMOVE AND VACCUM INSIDE OF BURNER USING A SHOPVAC CONNECTED TO FUEL INLET HOLE.

D5B. WATER IN BURNER(S) - IT'S POSSIBLE OVER THE OFF SEASON THAT WATER HAS GOTTEN INTO THE BURNER RING. REMOVE PIPE PLUG LOCATED ON FUEL TRAIN OUTSIDE BURNER DRUM.

D6. CHECK FOR LOOSE OR BROKEN FITTINGS AND PIPE FROM VALVE ASSEMBLY TO BURNERS.

D7A. TO D10A. INSPECT IGNITION PLUG FOR CARBON BUILDUP ON ELECTRODES, CHECK GAP 1/8" TO 3/16", AND INSPECT IGNITION WIRE FOR TIGHT CONNECTIONS AND CONDITION OF WIRE. IF DEFECTIVE, REPLACE AS REQUIRED.

D7B. TO D10B. REMOVE TRANSFORMER, IGNITION WIRE AND IGNITION PLUG FROM DRYER. CONNECT 120 VOLTS TO IGNITION TRANSFORMER WITH IGNITION PLUG AND WIRE CONNECTED.

IF NO SPARK ON IGNITION PLUG, TRANSFORMER IS DEFECTIVE, REPLACE.

D11. IF VOLTAGE IS PRESENT ON TERMINAL #12 (120 VOLTS), BURNER PROVEN LIGHT (DS20) IS DEFECTIVE, REPLACE. IF VOLTAGE IS NOT PRESENT ON TERMINAL #12, REFER TO FIREYE BULLETIN LOCATED IN SECTION 14, COMPONENT LITERATURE. CHECK FOR FLAME SIGNAL PER BULLETIN INSTRUCTIONS. IF FLAME SIGNAL IS NOT PRESENT, INSPECT FLAME SENSOR FOR CRACKED PORCELAIN, BROKEN ROD, LOOSE FLAME ROD, AND INSPECT FLAME SENSOR WIRE FOR TIGHT CONNECTIONS AND CONDITION OF WIRE. ALSO INSPECT GREEN BURNER GROUND WIRE FOR TIGHT CONNECTIONS AND CONDITION OF WIRE. REPLACE AS REQUIRED. IF FLAME SIGNAL IS PRESENT, FLAME CONTROL (FC1) IS DEFECTIVE, REPLACE.

D12. IF VOLTAGE IS PRESENT ON TERMINAL #13 (120 VOLTS), BURNER PROVEN LIGHT (DS21) IS DEFECTIVE, REPLACE. IF VOLTAGE IS NOT PRESENT ON TERMINAL #13, REFER TO FIREYE BULLETIN LOCATED IN SECTION 14, COMPONENT LITERATURE. CHECK FOR FLAME SIGNAL PER BULLETIN INSTRUCTIONS. IF FLAME SIGNAL IS NOT PRESENT, INSPECT FLAME SENSOR FOR CRACKED PORCELAIN, BROKEN ROD, LOOSE FLAME ROD, AND INSPECT FLAME SENSOR WIRE FOR TIGHT CONNECTIONS AND CONDITION OF WIRE. ALSO INSPECT GREEN BURNER GROUND WIRE FOR TIGHT CONNECTIONS AND CONDITION OF WIRE. REPLACE AS REQUIRED. IF FLAME SIGNAL IS PRESENT, FLAME CONTROL (FC2) IS DEFECTIVE, REPLACE.

D13. IF VOLTAGE IS PRESENT ON TERMINAL #14 (120 VOLTS), BURNER PROVEN LIGHT (DS22) IS DEFECTIVE, REPLACE. IF VOLTAGE IS NOT PRESENT ON TERMINAL #14, REFER TO FIREYE BULLETIN LOCATED IN SECTION 14, COMPONENT LITERATURE. CHECK FOR FLAME SIGNAL PER BULLETIN INSTRUCTIONS. IF FLAME SIGNAL IS NOT PRESENT, INSPECT FLAME SENSOR FOR CRACKED PORCELAIN, BROKEN ROD, LOOSE FLAME ROD, AND INSPECT FLAME SENSOR WIRE FOR TIGHT CONNECTIONS AND CONDITION OF WIRE. ALSO INSPECT GREEN BURNER GROUND WIRE FOR TIGHT CONNECTIONS AND CONDITION OF WIRE. REPLACE AS REQUIRED. IF FLAME SIGNAL IS PRESENT, FLAME CONTROL (FC3) IS DEFECTIVE, REPLACE.

D14. IF VOLTAGE IS PRESENT ON TERMINAL #15 (120 VOLTS), BURNER PROVEN LIGHT (DS23) IS DEFECTIVE, REPLACE. IF VOLTAGE IS NOT PRESENT ON TERMINAL #15, REFER TO FIREYE BULLETIN LOCATED IN SECTION 14, COMPONENT LITERATURE. CHECK FOR FLAME SIGNAL PER BULLETIN INSTRUCTIONS. IF FLAME SIGNAL IS NOT PRESENT, INSPECT FLAME SENSOR FOR CRACKED PORCELAIN, BROKEN ROD, LOOSE FLAME ROD, AND INSPECT FLAME SENSOR WIRE FOR TIGHT CONNECTIONS AND CONDITION OF WIRE. ALSO INSPECT GREEN BURNER GROUND WIRE FOR TIGHT CONNECTIONS AND CONDITION OF WIRE. REPLACE AS REQUIRED. IF FLAME SIGNAL IS PRESENT, FLAME CONTROL (FC4) IS DEFECTIVE, REPLACE.

E1. WITH FLAME SYSTEM "ON", BURNER PROVEN LIGHTS (DS20, DS21) "ON", CHECK TERMINAL #14(3) (120 VOLTS) LOCATED ON THE FLAME RELAY (K1) PLUG-IN BASE. IF NO VOLTAGE IS PRESENT THE FLAME RELAY (K1) IS DEFECTIVE, REPLACE.

E2. WITH FLAME SYSTEM "ON", BURNER PROVEN LIGHTS (DS20, DS21, DS22) "ON", CHECK TERMINAL #14(3) (120 VOLTS) LOCATED ON THE FLAME RELAY (K2) PLUG-IN BASE. IF NO VOLTAGE IS PRESENT THE FLAME RELAY (K2) IS DEFECTIVE, REPLACE.

E3. WITH FLAME SYSTEM "ON", BURNER PROVEN LIGHTS (DS20, DS21, DS22, DS23) "ON", CHECK TERMINAL #14(3) (120 VOLTS) LOCATED ON THE FLAME RELAY (K3) PLUG-IN BASE. IF NO VOLTAGE IS PRESENT THE FLAME RELAY (K3) IS DEFECTIVE, REPLACE.

E4. WITH FLAME SYSTEM "ON", BURNER PROVEN LIGHT(S) (DS20, DS21, DS22, DS23) "ON". VISUALLY INSPECT THE CONTACTS IN THE FLAME RELAY (K6) TO SEE IF THEY ARE CLOSING. IF NOT, THE FLAME RELAY (K6) IS DEFECTIVE, REPLACE.

6. SEQUENCE: UNLOAD SWITCH (SW5) TO "ON", ENERGIZING UNLOAD CIRCUIT.

ACTION: UNLOAD SWITCH (SW5) "ON", GRAIN UNLOADING LIGHT (DS19) "ON", STARTS UNLOAD AUGER AND DRY AUXILIARY UNLOADING. UNLOADS DRY GRAIN FROM THE DRYER AT A PRE-SELECTED RATE.

SYMPTOMS:
A. NO GRAIN UNLOADING LIGHT (DS19).
B. GRAIN UNLOADING LIGHT (DS19) "ON" BUT UNLOADING SYSTEM NOT RUNNING.
C. DRYER SHUTS DOWN IMMEDIATELY OR DURING UNLOADING OPERATION.

POSSIBLE CAUSES:
A. DEFECTIVE GRAIN UNLOADING SWITCH (SW5).
DEFECTIVE GRAIN UNLOADING LIGHT (DS19).

B1. DEFECTIVE AUXILIARY UNLOAD STARTER COIL (S8).

B2. DEFECTIVE AUXILIARY UNLOAD STARTER INTERLOCK (SW20).
B3. DEFECTIVE UNLOAD AUGER STARTER COIL (S7).

C1. OVERLOAD(S) ON UNLOAD AUGER AND/OR AUXILIARY UNLOAD STARTER(S) (S7, S8) TRIPPED.
C2. OPEN DISCHARGE OVERFLOW SWITCH (OPTIONAL ON SOME MODELS).

CORRECTIVE ACTION:
A. IF VOLTAGE IS PRESENT ON TERMINAL #39 (120 VOLTS), TURN UNLOAD SWITCH (SW5) TO "ON". THEN CHECK FOR

VOLTAGE ON TERMINAL #49. IF VOLTAGE IS NOT PRESENT THE UNLOAD SWITCH (SW5) IS DEFECTIVE, REPLACE. IF VOLTAGE IS PRESENT, THE GRAIN UNLOADING LIGHT (DS19) IS DEFECTIVE, REPLACE.

B1. IF AUXILIARY UNLOAD STARTER (S8) DOES NOT PULL IN AND VOLTAGE IS PRESENT AT LOAD SIDE OF COIL, THE HOLDING COIL IS DEFECTIVE, REPLACE.

B2. IF AUXILIARY UNLOAD STARTER (S8) DOES PULL IN, CHECK LOAD SIDE OF INTERLOCK (SW20) ON AUXILIARY UNLOAD STARTER (S8) FOR PRESENCE OF VOLTAGE (120 VOLTS). IF VOLTAGE IS PRESENT AT LOAD SIDE OF INTERLOCK (SW20), CHECK OPPOSITE SIDE OF INTERLOCK (SW20). IF NO VOLTAGE IS PRESENT, THE INTERLOCK (SW20) IS DEFECTIVE, REPLACE.

B3. IF UNLOAD AUGER STARTER (S7) DOES NOT PULL IN AND VOLTAGE IS PRESENT AT LOAD SIDE OF COIL, THE HOLDING COIL IS DEFECTIVE, REPLACE.

C1. OVERLOADS ON UNLOAD AUGER AND/OR AUXILIARY UNLOAD STARTER(S) (S7, S8) MAY HAVE TRIPPED FROM A MOTOR DRAWING HIGH AMPERAGE. DETERMINE WHICH ONE IS OPEN. RESET DEFECTIVE OVERLOAD. IT WILL BE NECESSARY TO DETERMINE IF A SHORT CIRCUIT OR EXCESSIVE OVERLOAD CONDITION EXISTS IN THIS ISOLATED SYSTEM AND WHAT CORRECTIVE STEPS NEED TO BE TAKEN TO RESOLVE THIS CONDITION. OTHER POSSIBLE CAUSES COULD BE (1) BAD MOTOR, REPLACE. (2) JAMMED UNLOAD SYSTEM, CORRECT. (3) LOOSE WIRING CONNECTIONS ON TERMINALS, TIGHTEN. (4) DEFECTIVE OVERLOAD, REPLACE.

C2. CHECK FOR OVERFLOW CONDITION, CORRECT.

7A. SEQUENCE: METERING SELECTOR SWITCH (SW6) TO "MAN", ENERGIZING METERING SYSTEM CIRCUIT.

ACTION: METERING SELECTOR SWITCH (SW6) TO "MAN" POSITION, STARTS METERING ROLLS AND DISCHARGES AT VARIABLE RATE CONTROLLED BY SETTING OF MANUAL METERING CONTROL (RV1).

NOTE: UNLOAD AUGER AND AUXILIARY UNLOAD SYSTEM MUST BE "ON" BEFORE METERING SYSTEM IS ENERGIZED.

SYMPTOMS:
A. METERING ROLLS DO NOT START.
B. DRYER SHUTS DOWN IMMEDIATELY OR DURING UNLOADING OPERATION.
C. RATE OF DISCHARGE CANNOT BE CONTROLLED.

POSSIBLE CAUSE:
A1. DEFECTIVE UNLOAD STARTER INTERLOCK (SW21).
A2. DEFECTIVE FUSE(S) – DC MOTOR DRIVE (SCR1).
A3. DEFECTIVE METERING ROLL SELECTOR SWITCH (SW6).
A4. DEFECTIVE DC MOTOR DRIVE (SCR1).

A5. DEFECTIVE DC MOTOR AND/OR BRUSHES.
A6. DEFECTIVE MANUAL SPEED CONTROL (RV1).

B1. SHORT CIRCUIT IN DC MOTOR AND/OR BRUSHES.
B2. SHORT CIRCUIT IN DC MOTOR DRIVE (SCR1).
B3. FEEDROLL MONITOR SYSTEM "OPEN" DUE TO: DEFECTIVE FEEDROLL MONITOR SWITCH (SW8) OR CAM NUT, TIMER RELAY(S) (K10, K11), OR METERING ROLLS STOPPING BECAUSE OF JAMMED METERING ROLLS OR BROKEN CHAIN.

C1. DEFECTIVE MANUAL SPEED CONTROL (RV1).
C2. DEFECTIVE DC MOTOR DRIVE (SCR1).
C3. DC MOTOR DRIVE (SCR1) OUT OF CALIBRATION.

CORRECTIVE ACTION:

A1. IF UNLOAD AUGER STARTER (S7) DOES PULL IN, CHECK LOAD SIDE OF INTERLOCK (SW21) ON UNLOAD AUGER STARTER (S7) FOR PRESENCE OF VOLTAGE (120 VOLTS). IF VOLTAGE IS PRESENT AT LOAD SIDE OF INTERLOCK (SW21), CHECK OPPOSITE SIDE OF INTERLOCK (SW21). IF NO VOLTAGE IS PRESENT, THE INTERLOCK (SW21) IS DEFECTIVE, REPLACE.

A2. CHECK FUSE(S) LOCATED ON DC DRIVE (SCR1) IF DEFECTIVE, REPLACE.

A3. IF VOLTAGE IS PRESENT ON TERMINAL #64 (120 VOLTS) WITH METERING ROLL SELECTOR SWITCH (SW6) "ON" THEN CHECK FOR VOLTAGE ON TERMINAL #75. IF VOLTAGE IS NOT PRESENT THE METERING ROLL SELECTOR SWITCH (SW6) IS DEFECTIVE, REPLACE.

A4. IF VOLTAGE IS PRESENT ON TERMINAL #75 (120 VOLTS) WITH METERING ROLL SELECTOR SWITCH (SW6) "ON" THEN CHECK FOR VOLTAGE (0 TO 90 VOLTS DC) ON TERMINALS #73 (+) & #74 (-), IF VOLTAGE IS NOT PRESENT THE SCR CONTROL IS DEFECTIVE, REPLACE. NOTE: IF THE MOTOR IS DEFECTIVE THE DC DRIVE (SCR1) WILL SHOW NO VOLTAGE ON TERMINALS #73 & #74, THERE MUST BE A LOAD ON TERMINALS #73 & #74 TO COMPLETE THE TEST. A DEFECTIVE MOTOR OR BRUSHES CAN RESULT IN DAMAGE TO THE DC DRIVE (SCR1).

A5. DISCONNECT MOTOR WIRES AND CHECK FOR CONTINUITY. IF NO CONTINUITY, CHECK BRUSHES TO INSURE BOTH BRUSHES ARE MAKING CONTACT WITH THE ROTOR. IF THEY ARE NOT, CLEAN OR REPLACE. IF BOTH BRUSHES ARE MAKING CONTACT THE MOTOR IS DEFECTIVE, REPAIR OR REPLACE. NOTE: A DEFECTIVE MOTOR OR BRUSHES CAN RESULT IN DAMAGE TO THE DC DRIVE (SCR1).

A6. DISCONNECT WIRES FROM THE MANUAL METERING CONTROL (RV1) AND CHECK RESISTANCE OF CONTROL (0 TO 5K OHMS), TURNING CONTROL KNOB 270 DEGREES. IF FULL SPAN DOES NOT OCCUR OR SPIKES OCCUR REPLACE MANUAL METERING CONTROL (RV1).

B1. DISCONNECT MOTOR WIRES AND CHECK FOR CONTINUITY. IF CONTINUITY IS PRESENT CHECK EACH WIRE TO GROUND FOR A SHORT CIRCUIT. IF A SHORT CIRCUIT IS PRESENT REPAIR OR REPLACE MOTOR.

B2. WITH POWER "OFF" AND D.C. MOTOR WIRE DISCONNECTED CHECK TERMINAL #75 TO GROUND FOR A SHORT CIRCUIT, IF A SHORT CIRCUIT IS PRESENT THE DC DRIVE (SCR1) NEEDS TO BE REPAIRED OR REPLACED.

B3A. IF VOLTAGE IS PRESENT ON TERMINAL #31 (120 VOLTS) THEN CHECK FOR VOLTAGE ON TERMINAL #32 (120 VOLTS) WHILE HOLDING THE POWER SWITCH (SW1) IN THE "ON" POSITION. IF NO VOLTAGE IS PRESENT THE FEEDROLL MONITOR CIRCUIT IS OPEN. FIRST, CHECK TO SEE IF THE SELECTOR SWITCH (SW7) IS IN THE "OFF" POSITION. IF SELECTOR SWITCH (SW7) IS IN THE "ON" POSTION, RETURN TO "OFF" POSITION.

B3B. IF DRYER SHUTS DOWN WITHIN 60 SECONDS WHEN FEEDROLL MONITOR SELECTOR SWITCH (SW7) IS "ON" AND METERING SYSTEM IS OPERATING, CHECK VOLTAGE (120 VOLTS) ON TERMINALS #62 AND #63. VOLTAGE SHOULD BE PRESENT ON EACH TERMINAL ABOUT EVERY 2 TO 4 SECONDS WHILE THE FEEDROLLS ARE TURNING. IF VOLTAGE IS NOT PRESENT ON BOTH TERMINALS CHECK FEEDROLL MONITOR SWITCH (SW8) FOR CORRECT OPERATION AND CAM NUT ADJUSTMENT LOCATED ON FEEDROLL SPROCKET. ADJUST CAM NUT OR REPLACE FEEDROLL MONITOR SWITCH (SW8). IF VOLTAGE IS PRESENT, CHECK THE TIME DELAY RELAYS (K10 & K11) FOR PROPER OPERATION AND SETTING (60 SEC.). SET TO 60 SECONDS OR REPLACE IF DEFECTIVE.

B3C. CHECK FOR JAMMED METERING ROLL(S), CORRECT, OR CHECK BROKEN CHAIN, REPAIR OR REPLACE.

C1. DISCONNECT WIRES FROM THE MANUAL METERING CONTROL (RV1) AND CHECK RESISTANCE OF CONTROL (0 TO 5K OHMS), TURNING CONTROL KNOB 270 DEGREES. IF FULL SPAN DOES NOT OCCUR OR SPIKES OCCUR, REPLACE MANUAL METERING CONTROL (RV1).

C2. IF VOLTAGE IS PRESENT ON TERMINAL #75 (120 VOLTS) WITH METERING SELECTOR SWITCH (SW6) "ON" THEN CHECK FOR VOLTAGE (0 TO 90 VOLTS DC) ON TERMINALS #73 (+) & #74 (-), IF VOLTAGE IS NOT PRESENT THE SCR CONTROL IS DEFECTIVE, REPLACE. NOTE: IF THE MOTOR IS DEFECTIVE THE DC DRIVE (SCR1) WILL SHOW NO VOLTAGE ON TERMINALS #73 & #74, THERE MUST BE A LOAD ON TERMINALS #73 & #74 TO COMPLETE THE TEST. A DEFECTIVE MOTOR OR BRUSHES CAN RESULT IN DAMAGE TO THE DC DRIVE (SCR1).

C3. STEP 1: REMOVE THE COVER OF THE DC DRIVE (SCR1) AND LOCATE THE "MIN", "MAX" AND "IR COMP" POTS ON THE CIRCUIT BOARD.

STEP 2: SET THE METERING SELECTOR SWITCH (SW6) TO THE "MAN" POSITION.

STEP 3: IR COMPENSATION ADJUSTMENT:
(a.) IR COMPENSATION IS PROVIDED TO OVERCOME THE MOTOR'S NATURAL TENDENCY TO SLOW DOWN AS LOAD INCREASES. IF THE MOTOR SLOWS DOWN EXCESSIVELY AS IT IS LOADED, THE POT MARKED "IR COMP" SHOULD BE ADJUSTED CLOCKWISE.
(b.) IF THE IR COMP IS ADJUSTED TOO FAR CLOCKWISE, THE MOTOR WILL BEGIN TO OSCILLATE IN SPEED OR "HUNT". IF THIS PULSING OF SPEED OCCURS, ADJUST THE IR COMP COUNTERCLOCKWISE UNTIL THE MOTOR SPEED STABILIZES.

STEP 4: MINIMUM SPEED ADJUSTMENT:
(a.) ADJUST THE MANUAL SPEED CONTROL (RV1) FULLY COUNTERCLOCKWISE.

(b.) ADJUST THE "MIN" SPEED POT ON DC DRIVE (SCR1) WITH A SCREWDRIVER UNTIL YOU READ 8 VDC ON THE DC VOLTMETER (M1).

STEP 5: MAXIMUM SPEED ADJUSTMENT:
(a.) ADJUST THE MANUAL SPEED CONTROL (RV1) FULLY CLOCKWISE.
(b.) ADJUST THE "MAX" SPEED POT ON THE DC DRIVE (SCR1) WITH A SCREWDRIVER UNTIL YOU READ 85 VDC ON THE DC VOLTMETER (M1). NOTE: DO NOT EXCEED 90 VDC IN MANUAL OR AUTOMATIC MODE. THIS WILL CAUSE DAMAGE TO THE DC MOTOR.

STEP 6: MAKE SURE YOUR TAKE AWAY SYSTEM CAN HANDLE 90 VDC OUTPUT OF GRAIN. IF NOT, YOU CAN ADJUST THE "MAX" SPEED POT ON THE DC DRIVE (SCR1) DOWN TO MEET YOUR SYSTEM CAPACITY. (EX. 75 VDC).

STEP 7: RECHECK THE UNLOADING RATE BY STARTING AT STEP 4 AND VERIFY THAT THE MINIMUM AND MAXIMUM VOLTAGES HAVE BEEN PROPERLY SET.

STEP 8: PLACE COVER ON THE DC DRIVE (SCR1).

NOTE: FOR MORE INFORMATION ON THE DC DRIVE (SCR1), REFER TO SECTION 14 "COMPONENT LITERATURE".

7B. SEQUENCE: METERING SELECTOR SWITCH (SW6) TO "AUTO", ENERGIZING AUTOMATIC METERING SYSTEM CIRCUIT.

NOTE: BEFORE TROUBLE SHOOTING AUTOMATIC METERING SYSTEM, MANUAL METERING SYSTEM MUST BE OPERATIONAL. IF NOT, REFER TO SEQUENCE "7A".

ACTION: METERING SELECTOR SWITCH (SW6) TO "AUTO" POSITION, STARTS METERING ROLLS AND DISCHARGES AT VARIABLE RATE CONTROLLED BY SETTING OF AUTOMATIC METERING CONTROL (TC2). THE

AUTOMATIC SYSTEM SENSES GRAIN TEMPERATURE IN THE GRAIN COLUMN AND ADJUSTS THE DISCHARGE RATE AS NECESSARY TO AID IN MAINTAINING A CONSISTENT GRAIN MOISTURE LEVEL.

NOTE: UNLOAD AUGER AND AUXILIARY UNLOAD SYSTEM MUST BE "ON" BEFORE METERING SYSTEM IS ENERGIZED.

SYMPTOMS:
A. RATE OF DISCHARGE CANNOT BE ADJUSTED.
B. NOT MAINTAINING A CONSISTENT GRAIN MOISTURE LEVEL.

POSSIBLE CAUSES:
A1. DEFECTIVE METERING SELECTOR SWITCH (SW6).
A2. DEFECTIVE AUTOMATIC MOISTURE RELAY (K12).
A3. DEFECTIVE MOISTURE SENSOR OR SENSOR WIRING.
A4. DEFECTIVE AUTOMATIC METERING CONTROL (TC2).

B1. IMPROPER SETTING OF MOISTURE CONTROL SYSTEM.
B2. INCORRECT CONFIGURATION OF AUTOMATIC METERING CONTROL (TC2).

CORRECTIVE ACTION:
A1. IF VOLTAGE IS PRESENT ON TERMINAL #64 (120 VOLTS) WITH METERING SELECTOR SWITCH (SW6) "ON" - "AUTO" POSITION, THEN CHECK FOR VOLTAGE ON TERMINAL #76. IF VOLTAGE IS NOT PRESENT THE METERING SELECTOR SWITCH (SW6) IS DEFECTIVE, REPLACE.

A2. IF VOLTAGE IS PRESENT ON TERMINAL #76 (120 VOLTS) WITH METERING SELECTOR SWITCH (SW6) "ON" - "AUTO" POSITION, CHECK AUTOMATIC MOISTURE RELAY (K12) TO ENSURE CONTACTS ARE CLOSING. IF NOT, RELAY IS DEFECTIVE, REPLACE.

A3. REFER TO ERROR MESSAGES CHART ON PAGE 9-29.

A4. CHECK AUTOMATIC METERING CONTROL AS FOLLOWS:

STEP 1: CHECK SUPPLY VOLTAGE (120 VOLTS) WITH A VOLT METER BETWEEN TERMINALS 98 AND 99 ON THE CONTROL. IF THE SUPPLY VOLTAGE IS NOT PRESENT, CHECK THE POWER SOURCE FOR PROBLEMS.

STEP 2: CHECK THE 0-10 VDC OUTPUT BY MEASURING WITH A VOM BETWEEN THE F1(+) AND G1(-) TERMINALS. IF 0-10 VDC IS NOT PRESENT OR IS OUT OF TOLERANCE, CONSIDER THE CONTROL TO BE DEFECTIVE AND REPLACE.

B1A. FINAL GRAIN MOISTURE LEVEL WAS NOT STABILIZED IN MANUAL MODE BEFORE SWITCHING TO AUTOMATIC MODE. RETURN TO MANUAL MODE AND STABILIZE MOISTURE LEVEL.

NOTE: A COMPLETE CYCLE OF GRAIN FLOW THROUGH THE DRYER MUST OCCUR BEFORE SEEING AN ACCURATE GRAIN MOISTURE LEVEL. THIS TIME IS DETERMINED BY THE MOISTURE CONTENT OF THE GRAIN ENTERING THE DRYER AND THE DESIRED

DISCHARGE MOISTURE LEVEL. THIS TIME CAN VARY FROM APPROXIMATELY ONE (1) HOUR TO TWO (2) HOURS. CHANGING THE MANUAL MODE BEFORE STABILIZING WILL GIVE IMPROPER GRAIN MOISTURE LEVEL OUTPUTS IN THE AUTOMATIC MODE.

(TIME + PATIENCE = DESIRED FINAL MOISTURE LEVEL).

B1B. WHEN ONLY ONE (1) TO TWO (2) POINTS OF MOISTURE ARE BEING REMOVED FROM THE GRAIN BEING DRIED, THE MANUAL MODE IS RECOMMENDED.

B2A. AUTOMATIC METERING CONTROL CONFIGURATION SETTINGS: PAGES 9-29 THROUGH 9-31 PROVIDE THE INFORMATION NEEDED TO CHECK OR CHANGE THE CONFIGURATION SETTINGS.
SETUP IS NORMALLY DONE AT THE FACTORY AND SHOULD ONLY BE DONE BY A QUALIFIED TECHNICIAN OR UNDER INSTRUCTION FROM THE FACTORY.

B2B. THE PROPORTIONAL BAND (PB) SETTING ON THE CONTROLLER AFFECTS HOW FAST THE CONTROL REACTS TO CHANGES IN THE GRAIN MOISTURE. THE PB SHOULD ALREADY BE SET TO THE DESIRED VALUE FOR YOUR DRYER (SEE *NOTE ON PAGE 9-30). THE PB CAN BE SET BY PRESSING THE ‘ADVANCE’ KEY UNTIL “Pb1” APPEARS IN THE LOWER DISPLAY, THEN PRESS ‘UP’ OR ‘DOWN’ KEY TO ACHIEVE DESIRED SET POINT WHICH IS SHOWN IN THE UPPER DISPLAY. IF IT SEEMS THAT THE SYSTEM IS NOT RESPONDING ENOUGH TO CHANGES IN MOISTURE CONTENT OF YOUR INCOMING GRAIN, CHANGE THE PB VALUE TO A LOWER NUMBER. IF THE SYSTEM SEEMS TO REACT TOO MUCH AND HUNTS BACK AND FORTH, CHANGE THE PB VALUE TO A HIGHER NUMBER. PRESS THE ‘INFINITY’ KEY AND TEMPERATURE AND SET POINT WILL RETURN TO THE DISPLAY.

***NOTE**: IT IS THE MOISTURE OF YOUR DISCHARGE GRAIN OVER A PERIOD OF TIME THAT IS IMPORTANT. DO NOT MAKE CHANGES TOO SOON BECAUSE THE SYSTEM APPEARS TO BE CHANGING SPEEDS TOO QUICKLY. SOMETIMES IT TAKES A LOT OF REACTION TO MAINTAIN THE DESIRED RESULTS.*

8. DRYER VIBRATION CAUSE AND PREVENTON.

SYMPTOMS:
- A. FAN(S) VIBRATING. (SEE FAN VIBRATION:, PAGE 9-29).
- B. DISCHARGE AUGER AND/OR LEVELING AUGER VIBRATING.
- C. DRYER NOT LEVEL.

POSSIBLE CAUSES:
- A1. DIRT IN FAN HUB.
- A2. LOOSE FAN HUB.
- A3. LOOSE FAN BLADE(S).
- A4. BLADE(S) DAMAGED.
- A5. LOOSE OR BROKEN MOTOR MOUNTS.
- A6. DEFECTIVE FAN MOTOR BEARING(S).

- B1. AUGER(S) OUT OF BALANCE.
- B2. DEFECTIVE AUGER BEARING(S).
- B3. BENT AUGER SHAFT(S).
- B4. LOOSE OR BROKEN BEARING HANGER(S).

- C1. NOT LEVELED WHEN INSTALLED.
- C2. INADEQUATE DRYER SUPPORT.

CORRECTIVE ACTION:
- A1. CLEAN FAN HUB.

- A2. TIGHTEN AND ALIGN HUB BOLTS.

- A3. RESET BLADE PITCH TO PROPER SETTING AND TIGHTEN.

- A4. REPLACE FAN OR HAVE FAN REPAIRED AND REBALANCED.

- A5. REPAIR AND CHECK FAN FOR VIBRATION CAUSE AND CORRECT.

- A6. REPLACE MOTOR BEARING(S) OR REPLACE MOTOR.

- B1. INSPECT FOR PROBLEM, REPAIR OR REPLACE.
  - (1) BENT AUGER TUBE
  - (2) FLIGHTING NOT WEARING EVEN.

- B2. REPLACE BEARING(S).

- B3. REPLACE SHAFT(S).

- B4. REPLACE HANGER(S).

- C1. LEVEL DRYER PROPERLY.

- C2. SUPPORT DRYER PER FOUNDATION PRINT.

FAN VIBRATION: CAUSE AND PREVENTION

EXTREME DAMAGE CAN OCCUR FROM FAN VIBRATION. THE MAJOR CAUSE OF VIBRATION IS RELATED TO DUST ACCUMULATION AND IMPROPER MAINTENANCE OF THE FAN ASSEMBLY AND FAN MOTOR.

DURING THE DRYING PROCESS, A CONSIDERABLE AMOUNT OF DUST IS DISPERSED INTO THE AIR. THIS AIR IS CHANNELED ACROSS THE MOTOR AND FAN INTO THE PLENUM CHAMBER. THE DUST CAN COLLECT ON THE MOTOR AND ON THE INSIDE OF THE FAN HUB OR THE CENTER PORTION OF THE FAN. THE AMOUNT OF DUST VARIES FROM THE TYPE AND QUALITY OF PRODUCT BEING DRIED. WHEN A DRYER IS SHUT DOWN, DUST MAY FALL OFF THE FAN HUB UNEVENLY. UPON RESTARTING, THIS ACCUMULATION OF DUST WILL ACT AS EXTRA WEIGHT ON THE FAN, CAUSING THE FAN TO BE OUT OF BALANCE. PREVENTIVE MAINTENANCE PROCEDURES TO ELIMINATE VIBRATION CAUSES ARE AS FOLLOWS: **INSPECT THE FAN HUB FOR DIRT**, **CHECK THE FAN BLADES FOR CHIPS, CRACKS AND PROPER SETTING, MAKE SURE ALL BOLTS ON THE BUSHING ARE TIGHT**. **CHECK THE FAN MOTOR MAKING SURE MOTOR MOUNT BOLTS ARE SECURE**, **MOTOR BEARINGS RUNNING COOL AND NOT NOISY**. MAJOR MOTOR MANUFACTURERS RECOMMEND THAT MOTORS BE ROTATED A MINIMUM OF FIVE REVOLUTIONS EVERY THIRTY DAYS TO PROVIDE PROPER LUBRICATION OF BEARINGS AND PREVENT MOISTURE CONTAMINATION IN THE MOTOR HOUSING. INSPECT MOTOR AND FAN ASSEMBLY ENSURING FREE TURNING OF FAN BLADES AND TO ENSURE PROPER CLEARANCE BETWEEN BLADES AND FAN DRUM.

FAN AND/OR MOTOR VIBRATION OVER A LONG PERIOD OF TIME WILL EVENTUALLY CAUSE PROBLEMS. CHECK YOUR DRYER!

SHUTDOWN PROCEDURE

1. MOVE METERING ROLL DRYING SELECTOR SWITCH TO "OFF" POSITION.

2. MOVE UNLOAD SWITCH TO "OFF" POSITION.

3. MOVE LOAD SWITCH TO "OFF" POSITION.

4. MOVE BURNER SWITCH TO "OFF" POSITION. **HOLDING THE POWER SWITCH TO "ON" POSITION MOMENTARILY WHILE MOVING THE BURNER SWITCH TO THE "OFF" POSITION WILL ALLOW FANS TO CONTINUE TO RUN**. OTHERWISE MOVING BURNER SWITCH TO "OFF" POSITION WILL SHUTDOWN ENTIRE DRYER AND RESTART OF FANS WILL BE NECESSARY TO COOL GRAIN.

NOTE: **TO CLEAR THE LINES OF FUEL** - TURN "OFF" FUEL SUPPLY AT TANK OR DRYER WITH BURNER SWITCH IN "ON" POSITION. AS SOON AS PRESSURE GAUGE ON DRYER DROPS TO ZERO, IMMEDIATELY SWITCH BURNER SWITCH TO "OFF" AS NOTED ABOVE TO AVOID BURNER SAFETY LOCKOUT.

5. AFTER DRYER HAS COOLED APPROXIMATELY 30 MINUTES AND PLENUM THERMOMETER READS AMBIENT TEMPERATURE CONDITIONS, MOVE POWER SWITCH TO "OFF".

6. TURN "OFF" MANUAL FUEL SUPPLY TO DRYER.

7. RETURN ALL SWITCHES TO "OFF" POSITION.

EMERGENCY SHUTDOWN

1. **MOVE POWER SWITCH TO "OFF"**, LOCATED ON LOWER PANEL IN THE ELECTRICAL CONTROL BOX OF THE DRYER. ALL SYSTEMS, ELECTRICAL AND FUEL WILL SHUTDOWN.

2. **TURN "OFF" MANUAL FUEL SUPPLY** TO DRYER.

3. **TURN "OFF" MAIN DISCONNECT** TO DRYER.

4. **RETURN ALL SWITCHES TO "OFF"** POSITION.

DRAWINGS

PART NUMBER	DRAWINGS	
900-006320	FOUNDATION LAYOUT DP AND DPSL SERIES	
900-006321	FOUNDATION LAYOUT DPX/SL SERIES	
900-006322	FOUNDATION LAYOUT DPX4T SERIES	
900-006323	FOUNDATION LAYOUT DPX8T SERIES	
900-007220	FOUNDATION LAYOUT DPX12T SERIES	
900-006327	ANCHORS - DPX4T-8T SERIES	
900-007221	ANCHORS – DPX12T SERIES	
900-006328	LEG EXTENSION DESIGN (SIDE AND CORNER)	
900-010576	ILLUSTRATION – PLENUM DOOR ASSEMBLY	
900-009194	GARNER (ROOF)	
900-009193	GARNER WIRING ILLUSTRATION	
900-010712	SCHEMATIC – PID MOIST. SYST. (STD.)	(2014)
900-010713	SCHEMATIC – MoistureLink (OPT.)	(2014)
900-010714	SCHEMATIC – MoistureLink SYSTEM	(2014)
900-010043	SCHEMATIC – FLAME CONTROL	(2012-2014)
900-010044	WIRING DIAGRAM FIREYE BASE	(2012-2014)
900-009215	PLUMBING SCHEMATIC – NON-CSA LIQUID PROPANE	
900-009216	PLUMBING SCHEMATIC – NON-CSA NATURAL GAS	
400-008618	PLENUM WALKWAY-ALL; GARNER WALKWAY-DP/DPSL	
400-008624	GARNER WALKWAY-DPX/SL, DPX4T-8T-12T-16GT	
900-008640	ILLUSTRATION SIDE WALKWAYS	
900-008667	ILLUSTRATION WALKWAYS-45DEG SLOPE	
900-005526	ILLUSTRATION – ERECTION DPX THRU 16GT	
900-005404	RECLAIM – DP/DPSL - (OPTIONAL)	
900-005527	RECLAIM – DPX/DPXSL – (OPTIONAL)	

ALL SHIPPING LISTS BELOW LOCATED IN SECTION 13

S-DPX-SL	SHIPPING LIST – ERECTION – DPX/DPXSL SERIES
S-DPX4T	SHIPPING LIST - ERECTION – DPX4T SERIES
S-DPX8T	SHIPPING LIST - ERECTION – DPX8T SERIES
S-DPX12T-16GT	SHIPPING LIST – ERECTION – DPX12T/DPX16GT SERIES
S-G-DP-1P	GARNER – DP/DPSL SERIES 230V 1PH
S-G-MSDP-240-480V	GARNER – DP/DPSL SERIES 240/480V
S-G-MSDP-380V	GARNER – DP/DPSL SERIES 380V (50Hz)
S-G-MSDP-575V	GARNER – DP/DPSL SERIES 575V
S-G-DPX-240-480V	GARNER – DPX/DPXSL SERIES 240/480V
S-G-DPX-380V	GARNER – DPX/DPXSL SERIES 380V (50Hz)
S-G-DPX-575V	GARNER – DPX/DPXSL SERIES 575V
S-G-DPX4T-8T-240-480V	GARNER – DPX4T/DPX8T SERIES 240/480V
S-G-DPX4T-8T-380V	GARNER – DPX4T/DPX8T SERIES 380V (50Hz)
S-G-DPX4T-8T-575V	GARNER – DPX4T/DPX8T SERIES 575V
S-G-DPX12T-16GT-240-480V	GARNER – DPX12T/DPX16GT SERIES 240/480V
S-G-DPX12T-16GT-380V	GARNER – DPX12T/DPX16GT SERIES 380V (50Hz)
S-G-DPX12T-16GT-575V	GARNER – DPX12T/DPX16GT SERIES 575V

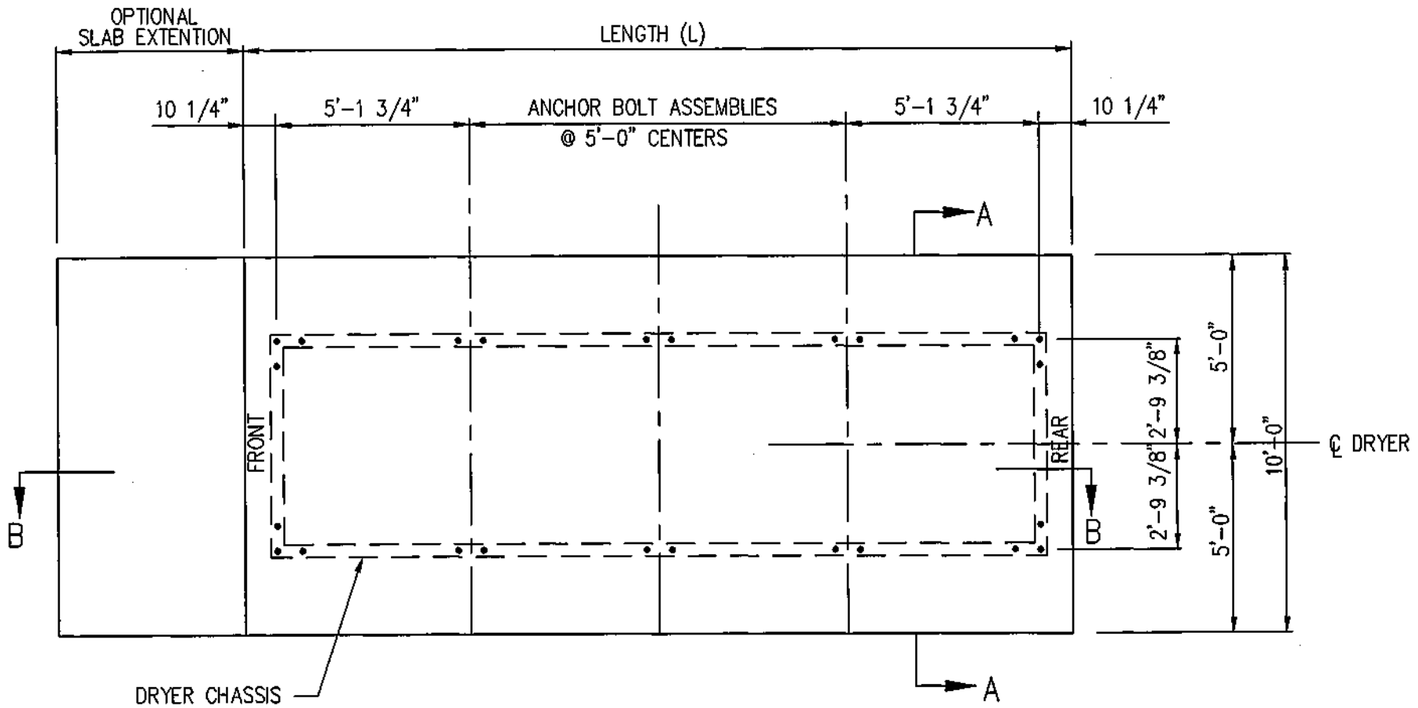

PLAN VIEW

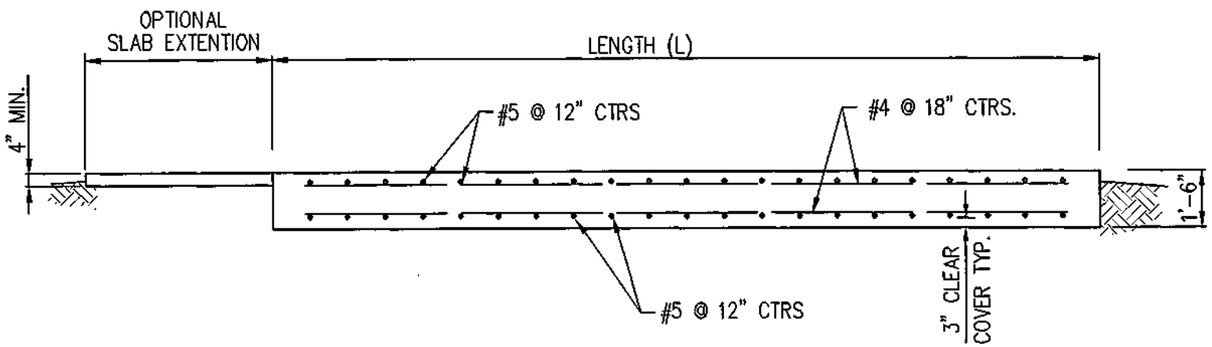

SECTION B-B

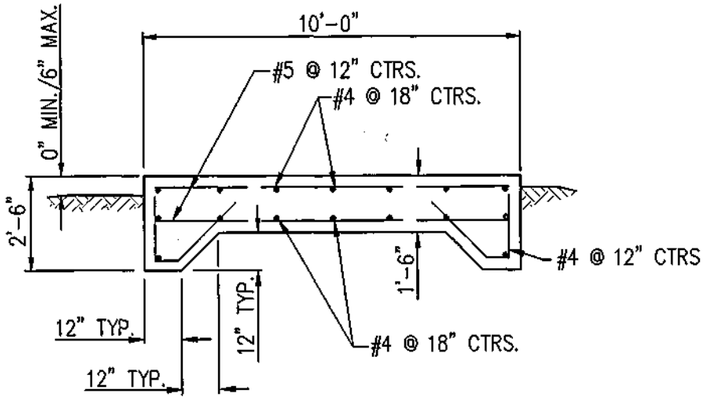

SECTION A-A

ECN	DATE	CHANGE	AUTH

NOTES:
1. "FRONT" INDICATES CONTROL PANEL END OF DRYER.
2. OPTIONAL SLAB EXTENSION IS FOR CONCRETE WORK AREA AT CONTROL PANEL END. A MINIMUM LENGTH OF 5 FEET SHOULD BE USED.

REGISTERED PROFESSIONAL ENGINEER
Stanley V. Johnson 7-1-97
E-5213
STATE OF NEBRASKA

MILLER & ASSOCIATES CONSULTING ENGINEERS, P.C.

SCALE: 1/4" = 1'-0"
PROJECT NO. 130-P167-002
DATE: JANUARY, 1997
DRAWN BY: BKS
APPROVED BY: SVJ
DRAWING NO. 6704

FOUNDATION PLAN
MSF-DP-DPSL SERIES

DELUX MFG. CO.
AIR BASE ROAD
KEARNEY, NEBRASKA

DELUX DRAWING NO.
900-006320
SHEET 1 OF 2

REV 01, 1999 • 10:48:19 Q:\PROJECTS\DRPDSF\LSX-SHT7

MODEL NO.	FOOTING LENGTH (L)	CONCRETE C.Y.	REINF. STEEL
DP 3015	12'	8.0	26-#5x 9'-6"
DPSL 3520			14-#4x 11'-6"
MSF 31010			26-#4x 5'-0" BENT
MSF 41515			
DP 4025	17'	11.3	36-#5x 9'-6"
DPSL 4530			16-#4x 16'-6"
MSF 62520			36-#4x 5'-0" BENT
MSF 72525			
DP 6030	22'	14.7	46-#5x 9'-6"
DPSL 7040			16-#4x 21'-6"
			46-#4x 5'-0" BENT
DP 7550	27'	18.0	56-#5x 9'-6"
DPSL 8560			16-#4x 26'-6"
			56-#4x 5'-0" BENT
DP 9045	32'	21.3	66-#5x 9'-6"
DPSL 10560			16-#4x 31'-6"
			66-#4x 5'-0" BENT
DP 12060	42'	28.0	86-#5x 9'-6"
DPSL 14080			16-#4x 41'-6"
			86-#4x 5'-0" BENT

NOTES:
QUANTITY CONCRETE SHOWN IN THIS TABLE IS BASED ON THE NEAT FOOTING DIMENSIONS AND IS PROVIDED FOR INFORMATION ONLY. ACTUAL QUANTITY REQUIRED MAY VARY BASED ON EXCAVATION DIMENSIONS; OPTIONAL SLAB EXTENSION AND YIELD OF CONCRETE SUPPLIED.

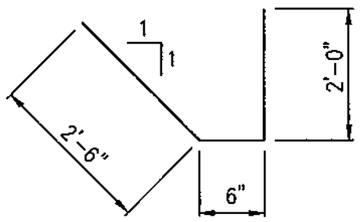

BENDING DIAGRAM
FOR #4 REBAR

ECN	DATE	CHANGE	AUTH
	9/30/98	ADDED MODEL No.s DPSL & MSF	SVJ

GENERAL NOTES

1. THIS FOOTING IS DESIGNED IN ACCORDANCE WITH THE 1994 UNIFORM BUILDING CODE. BASIC WIND SPEED IS 80 MPH, EXPOSURE C.
2. FOOTINGS ARE DESIGNED FOR THE SPECIFIC MODEL NUMBER LISTED WITH A 4 FOOT MAXIMUM LEG EXTENSION.
3. ANCHORS SHALL BE 5/8" DOUBLE CONE ANCHORS AS MANUFACTURED BY RAWLPLUG CO. INC. OR EQUAL. HOLES FOR ANCHORS WILL BE DRILLED AFTER DRYER IS SET. PROVIDE 2"x 2"x 1/4" PLATE WASHERS FOR EACH ANCHOR.
4. DRYER MUST BE LEVEL ALONG LENGTH AND WIDTH AT ALL TIMES DURING DRYING PROCESS.
5. CONCRETE SHALL HAVE A MINIMUM 28 DAY STRENGTH OF 3000 PSI.
6. REINFORCING STEEL SHALL BE ASTM A615 GRADE 60.
7. MINIMUM SOIL BEARING CAPACITY SHALL BE 1000 PSF.

PROFESSIONAL ENGINEER
Stanley V. Johnson
E-5213
10-1-98
REGISTERED
STATE OF NEBRASKA

MILLER & ASSOCIATES CONSULTING ENGINEERS, P.C.

SCALE:
PROJECT NO. 130-P167-002
DATE: JANUARY, 1997
DRAWN BY: BKS
APPROVED BY: SVJ
DRAWING NO. 6803

TITLE: FOUNDATION PLAN MSF-DP-DPSL SERIES

DELUX MFG. CO.
AIR BASE ROAD
KEARNEY, NEBRASKA

DELUX DRAWING NO. 900-006320
SHEET 2 OF 2

ECN	DATE	CHANGE	AUTH

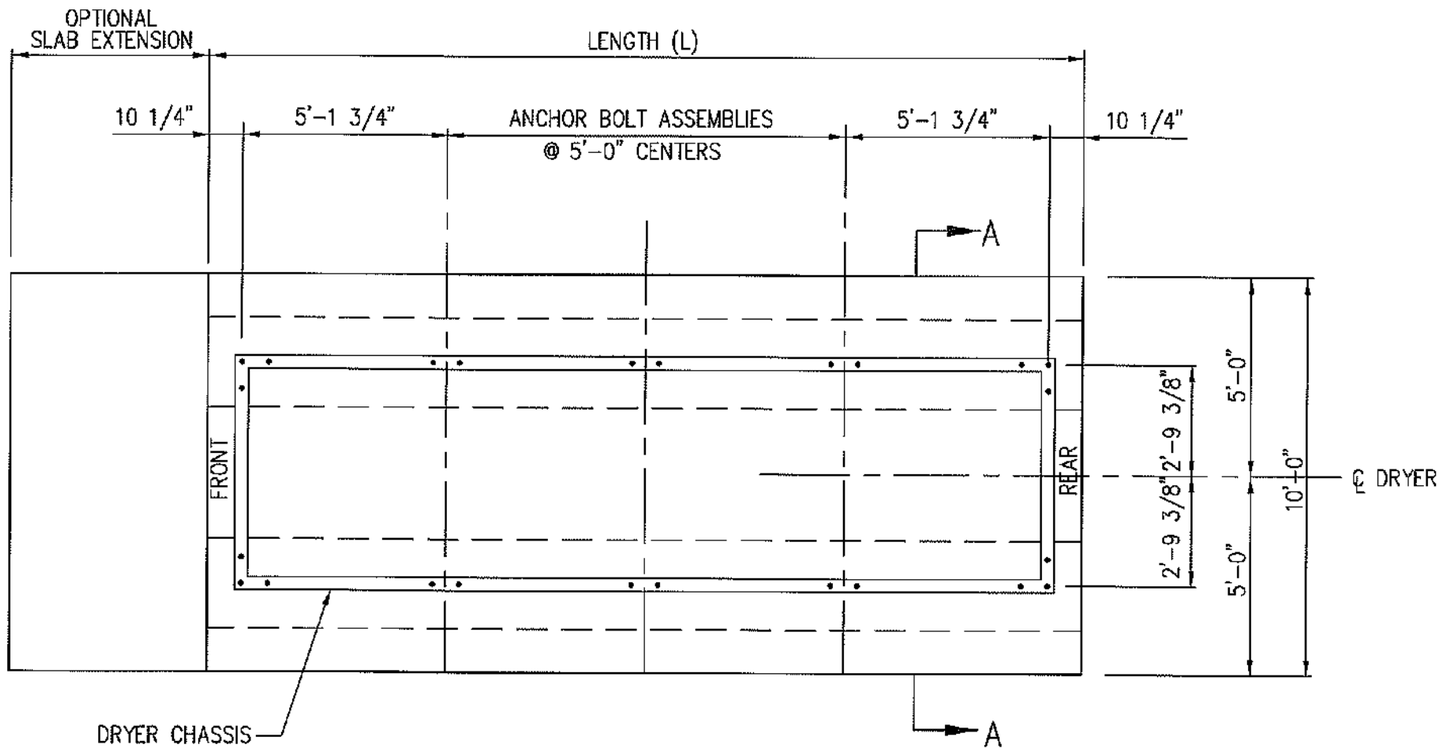

PLAN VIEW

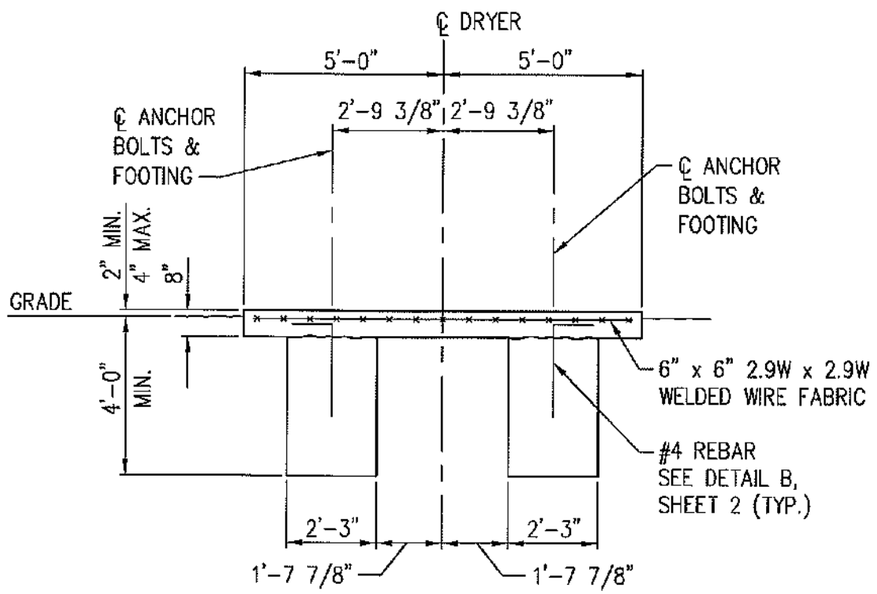

SECTION A-A

NOTES:
1. "FRONT" INDICATES CONTROL PANEL END OF DRYER.
2. OPTIONAL SLAB EXTENSION IS FOR CONCRETE WORK AREA AT CONTROL PANEL END. A MINIMUM LENGTH OF 5 FEET SHOULD BE USED.

GENERAL NOTES

1. THIS FOOTING IS DESIGNED IN ACCORDANCE WITH THE 2004 INTERNATIONAL BUILDING CODE. BASIC WIND SPEED IS 90 MPH, EXPOSURE C.
2. FOOTINGS ARE DESIGNED FOR THE SPECIFIC MODEL NUMBER LISTED WITH A 4 FOOT MAXIMUM LEG EXTENSION.
3. DRYER MUST BE LEVEL ALONG LENGTH AND WIDTH AT ALL TIMES DURING DRYING PROCESS.
4. CONCRETE SHALL HAVE A MINIMUM 28 DAY STRENGTH OF 3000 PSI.
5. REINFORCING STEEL SHALL BE ASTM A615 GRADE 60.
6. ANCHOR BOLTS SHALL BE 5/8"x 6" ALL THREAD RODS WITH HEX NUT AND WASHER MEETING THE REQUIREMENTS OF ASTM A307. DRILL 3/4"ø x 6" HOLES IN CONCRETE THROUGH DRYER BASE PLATE. USE SIMPSON EPOXY-TIE ADHESIVE OR EQUAL TO BOND ANCHOR BOLTS IN CONCRETE.
7. MINIMUM SOIL BEARING CAPACITY SHALL BE 1800 PSF.
8. THE 8" REINFORCED SLAB MAY BE EXTENDED BEYOND THE LIMITS SHOWN FOR ADDITIONAL SERVICE AREA.

MILLER & ASSOCIATES CONSULTING ENGINEERS, P.C.

This document, and the ideas and designs incorporated herein, as an instrument of professional service, is the property of Miller & Associates and is not to be used in whole or in part, for any other project without the written authorization of Miller & Associates.

SCALE: 1/4" = 1'-0"
PROJECT NO. 130-P167-006
DATE: APRIL, 2007
DRAWN BY: DDM
APPROVED BY: SVJ
DRAWING NO.

FOUNDATION PLAN
DPX-DPXSL SERIES

DELUX MFG. CO.
AIR BASE ROAD
KEARNEY, NEBRASKA

DELUX DRAWING NO. 900-006321
SHEET 1 OF 2

MODEL NO.	FOUNDATION LENGTH (L)	CONCRETE * (CY)	#4 x 3'-0" BENT REBAR	6" x 6" - 2.9W x 2.9W WELDED WIRE FABRIC	5/8"ø ANCHOR BOLTS
DPX 4525	12'-0"	10.0	24	9'-6" x 11'-6"	16
DPXSL 5030					
DPX 7040	17'-0"	14.1	34	9'-6" x 11'-6"	20
DPXSL 8050					
DPX 9050	22'-0"	18.3	44	9'-6" x 21'-6"	24
DPXSL 10060					
DPXSL 12560	27'-0"	22.4	54	9'-6" x 26'-6"	28
DPX 13575	32'-0"	26.6	64	9'-6" x 31'-6"	32
DPXSL 15090					
DPX 180100	42'-0"	34.9	84	9'-6" x 41'-6"	40
DPXSL 200120					

* CONCRETE QUANTITY SHOWN IN THIS TABLE IS BASED ON NEAT FOOTING DIMENSIONS AND IS PROVIDED FOR INFORMATION ONLY. ACTUAL QUANTITY REQUIRED MAY VARY.

ECN	DATE	CHANGE	AUTH

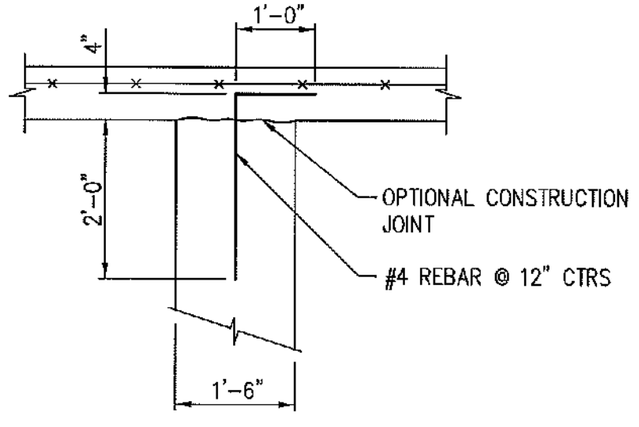

DETAIL B

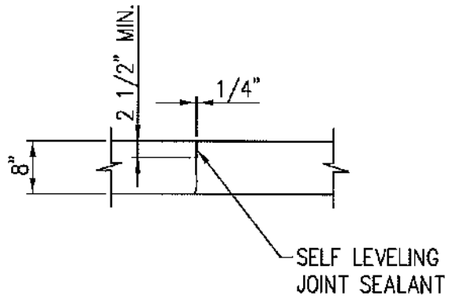

PROVIDE TRANSVERSE CONTROL JOINTS AT 12' MINIMUM SPACING.

CONTROL JOINT

MILLER & ASSOCIATES CONSULTING ENGINEERS, P.C.

This document, and the ideas and designs incorporated herein, as an instrument of professional service, is the property of Miller & Associates and is not to be used in whole or in part, for any other project without the written authorization of Miller & Associates.

SCALE: 1/4" = 1'-0"
PROJECT NO. 130-P167-006
DATE: APRIL, 2007
DRAWN BY: DDM
APPROVED BY: SVJ
DRAWING NO.

TITLE: FOUNDATION PLAN DPX-DPXSL SERIES

DELUX MFG. CO.
AIR BASE ROAD
KEARNEY, NEBRASKA

DELUX DRAWING NO. 900-006321
SHEET 2 OF 2

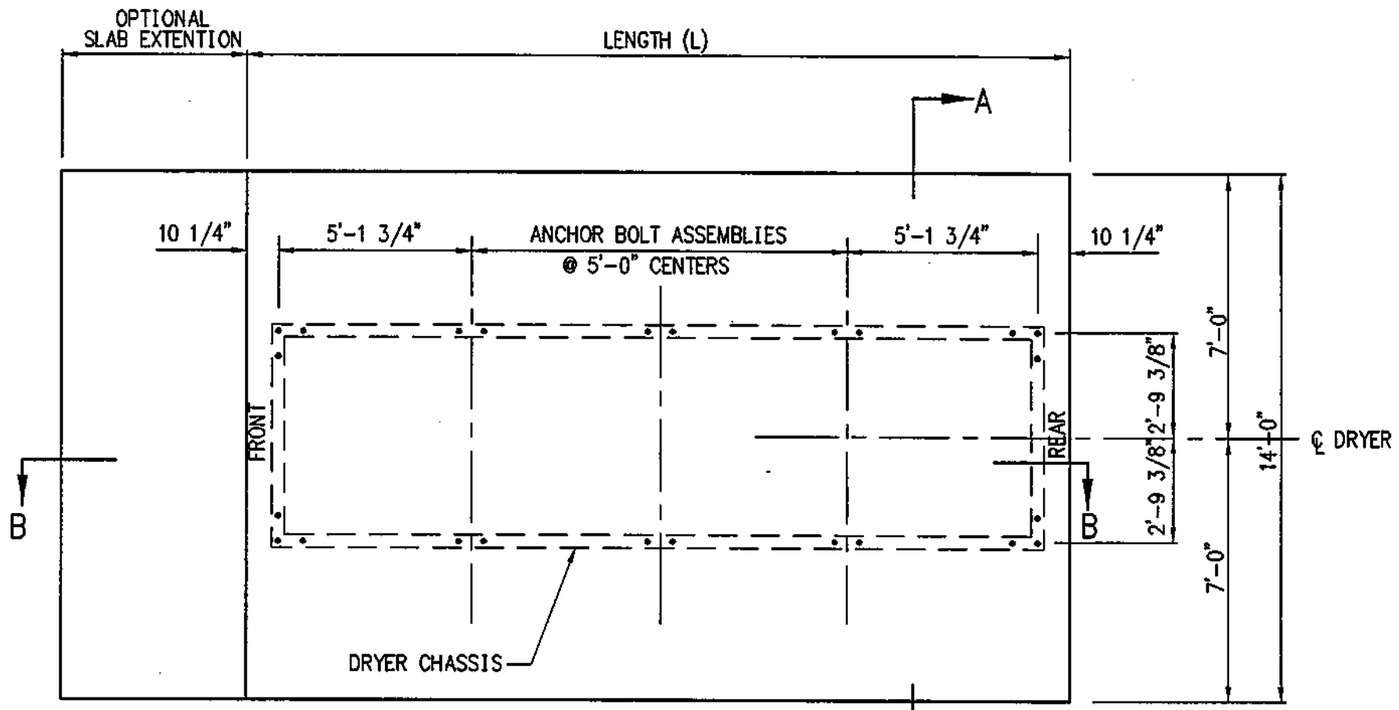

PLAN VIEW

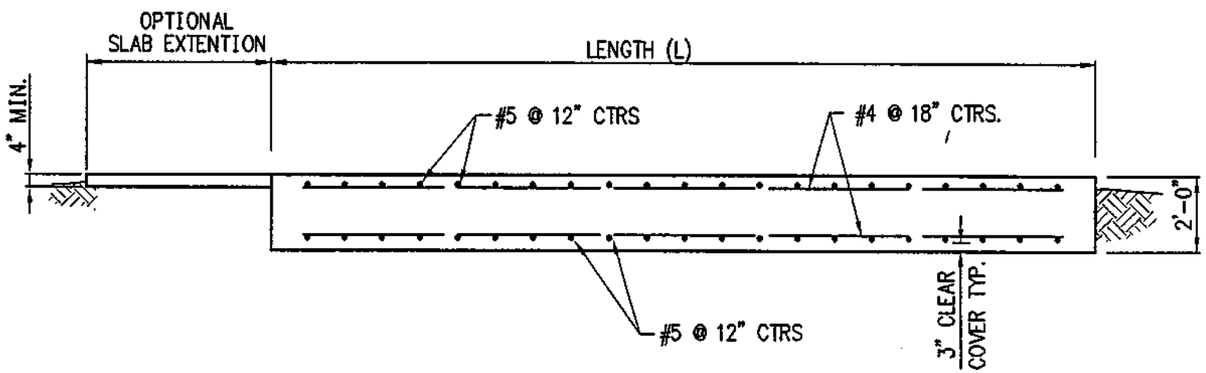

SECTION B-B

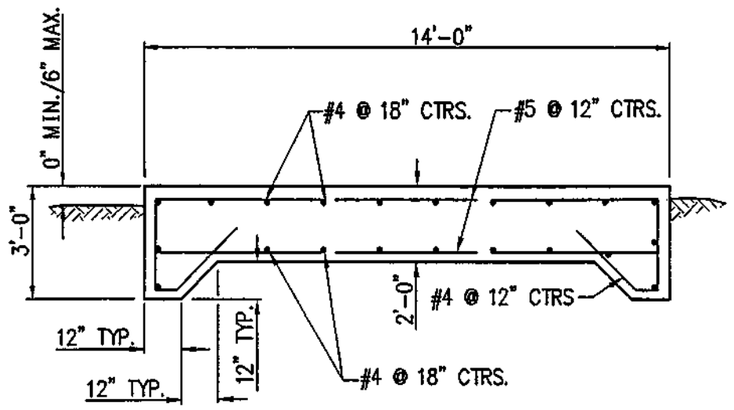

SECTION A-A

ECN	DATE	CHANGE	AUTH

NOTES:
1. "FRONT" INDICATES CONTROL PANEL END OF DRYER.
2. OPTIONAL SLAB EXTENSION IS FOR CONCRETE WORK AREA AT CONTROL PANEL END. A MINIMUM LENGTH OF 5 FEET SHOULD BE USED.

REGISTERED PROFESSIONAL ENGINEER
E-5213
STATE OF NEBRASKA

MILLER & ASSOCIATES CONSULTING ENGINEERS, P.C.

SCALE: 1/4" = 1'-0"
PROJECT NO. 130-P187-002
DATE: JANUARY, 1997
DRAWN BY: BKS
APPROVED BY: SVJ
DRAWING NO. 6808

TITLE: FOUNDATION PLAN
DPX4T SERIES

DELUX MFG. CO.
AIR BASE ROAD
KEARNEY, NEBRASKA

DELUX DRAWING NO. 900-006322
SHEET 1 OF 2

MODEL NO.	FOOTING LENGTH (L)	CONCRETE C.Y.	REINF. STEEL	ANCHOR BOLT ASSEMBLIES	
				CORNER	SIDE
DPX4T 5630	12'	13.8	26-#5x 13'-6"	4	2
			22-#4x 11'-6"		
			26-#4x 6'-0" BENT		
DPX4T 8460	17'	19.5	36-#5x 13'-6"	4	4
			22-#4x 16'-6"		
			36-#4x 6'-0" BENT		
DPX4T 11260	22'	25.3	46-#5x 13'-6"	4	6
			22-#4x 21'-6"		
			46-#4x 6'-0" BENT		
DPX4T 140100	27'	31.0	56-#5x 13'-6"	4	8
			22-#4x 26'-6"		
			56-#4x 6'-0" BENT		
DPX4T 16890	32'	37.4	66-#5x 13'-6"	4	10
			22-#4x 31'-6"		
			66-#4x 6'-0" BENT		
DPX4T 224120	42'	48.2	86-#5x 13'-6"	4	14
			22-#4x 41'-6"		
			86-#4x 6'-0" BENT		

NOTES:
QUANTITY OF CONCRETE SHOWN IN THIS TABLE IS BASED ON THE NEAT FOOTING DIMENSIONS AND IS PROVIDED FOR INFORMATION ONLY. ACTUAL QUANTITY REQUIRED MAY VARY BASED ON EXCAVATION DIMENSIONS, OPTIONAL SLAB EXTENSION AND YIELD OF CONCRETE SUPPLIED.

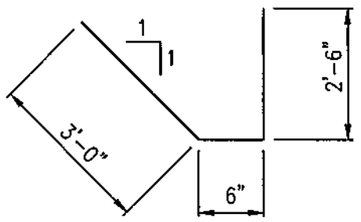

BENDING DIAGRAM
FOR #4 REBAR

ECN	DATE	CHANGE	AUTH
	9/30/98	REVISE MODEL No. w/ DPX4T	

GENERAL NOTES

1. THIS FOOTING IS DESIGNED IN ACCORDANCE WITH THE 1994 UNIFORM BUILDING CODE. BASIC WIND SPEED IS 80 MPH, EXPOSURE C.
2. FOOTINGS ARE DESIGNED FOR THE SPECIFIC MODEL NUMBER LISTED WITH A 4 FOOT MAXIMUM LEG EXTENSION.
3. ANCHORS SHALL BE 3-3/4" ø ANCHOR BOLTS FOR EACH CORNER LEG EXTENSION AND 2-3/4" ø ANCHOR BOLT FOR EACH SIDE LEG EXTENSION. PROVIDE 2" x 2" x 1/4" PLATE WASHER FOR EACH ANCHOR BOLT.
4. DRYER MUST BE LEVEL ALONG LENGTH AND WIDTH AT ALL TIMES DURING DRYING PROCESS.
5. CONCRETE SHALL HAVE A MINIMUM 28 DAY STRENGTH OF 3000 PSI.
6. REINFORCING STEEL SHALL BE ASTM A615 GRADE 60.
7. MINIMUM SOIL BEARING CAPACITY SHALL BE 1300 PSF.

REGISTERED PROFESSIONAL ENGINEER
Stanley Johnson
E-5213
1-4-98
STATE OF NEBRASKA

MILLER & ASSOCIATES CONSULTING ENGINEERS, P.C.

SCALE:
PROJECT NO. 130-P167-002
DATE: JANUARY, 1997
DRAWN BY: BKS
APPROVED BY: SVJ
DRAWING NO. 6807

TITLE: FOUNDATION PLAN DPX4T SERIES

DELUX MFG. CO.
AIR BASE ROAD
KEARNEY, NEBRASKA

DELUX DRAWING NO. 900-006322
SHEET 2 OF 2

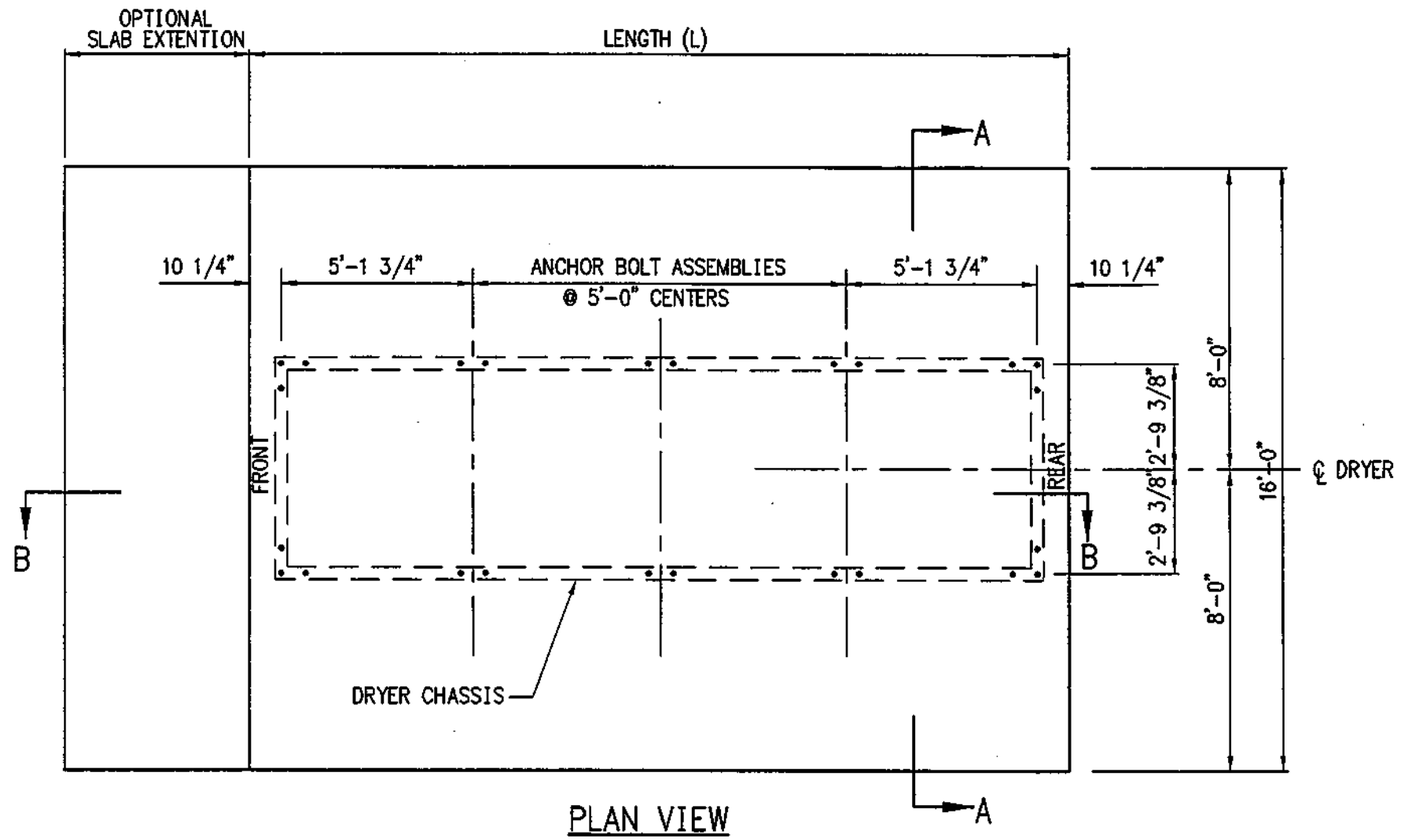

PLAN VIEW

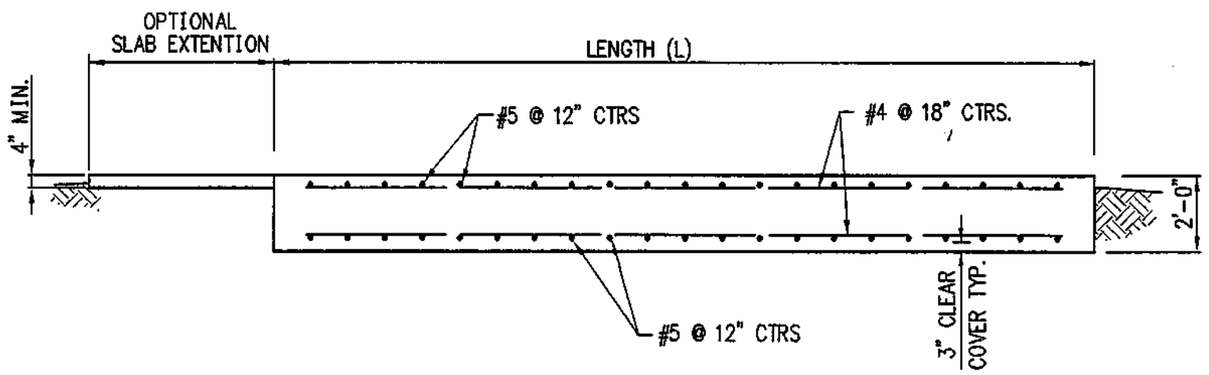

SECTION B-B

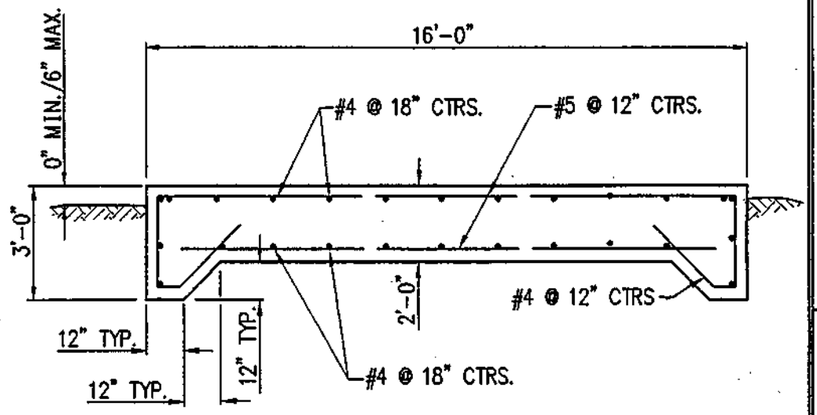

SECTION A-A

ECN	DATE	CHANGE	AUTH

NOTES:
1. "FRONT" INDICATES CONTROL PANEL END OF DRYER.
2. OPTIONAL SLAB EXTENSION IS FOR CONCRETE WORK AREA AT CONTROL PANEL END. A MINIMUM LENGTH OF 5 FEET SHOULD BE USED.

REGISTERED PROFESSIONAL ENGINEER
Stanley V. Johnson
2-20-97
E-5213
STATE OF NEBRASKA

MILLER & ASSOCIATES CONSULTING ENGINEERS, P.C.

SCALE: 1/4" = 1'-0"
PROJECT NO. 130-P167-002
DATE: JANUARY, 1997
DRAWN BY: BKS
APPROVED BY: SW
DRAWING NO. 6810

TITLE: FOUNDATION PLAN
DPXST SERIES

DELUX MFG. CO.
AIR BASE ROAD
KEARNEY, NEBRASKA

DELUX DRAWING NO. 900-006323
SHEET 1 OF 2

MODEL NO.	FOOTING LENGTH (L)	CONCRETE C.Y.	REINF. STEEL	ANCHOR BOLT ASSEMBLIES	
				CORNER	SIDE
DPX8T 6440	12'	15.6	26-#5x 15'-6"	4	2
			24-#4x 11'-6"		
			26-#4x 6'-0" BENT		
DPX8T 12880	22'	28.5	46-#5x 15'-6"	4	6
			24-#4x 21'-6"		
			46-#4x 6'-0" BENT		
DPX8T 160120	27'	35.1	56-#5x 15'-6"	4	8
			24-#4x 31'-6"		
			56-#4x 6'-0" BENT		
DPX8T 192120	32'	41.5	66-#5x 15'-6"	4	10
			24-#4x 31'-6"		
			66-#4x 6'-0" BENT		
DPX8T 256160	42'	54.4	86-#5x 15'-6"	4	14
			24-#4x 41'-6"		
			86-#4x 6'-0" BENT		

NOTES:
QUANTITY OF CONCRETE SHOWN IN THIS TABLE IS BASED ON THE NEAT FOOTING DIMENSIONS AND IS PROVIDED FOR INFORMATION ONLY. ACTUAL QUANTITY REQUIRED MAY VARY BASED ON EXCAVATION DIMENSIONS, OPTIONAL SLAB EXTENSION AND YIELD OF CONCRETE SUPPLIED.

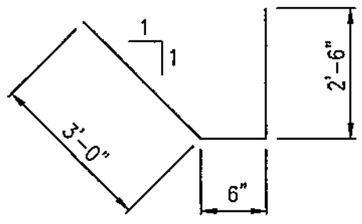

BENDING DIAGRAM
FOR #4 REBAR

ECN	DATE	CHANGE	AUTH
	9/30/98	REVISED MODEL No.s w/ DPX8T ADDED MODEL No. DPX8T 160120	

GENERAL NOTES

1. THIS FOOTING IS DESIGNED IN ACCORDANCE WITH THE 1994 UNIFORM BUILDING CODE. BASIC WIND SPEED IS 80 MPH, EXPOSURE C.
2. FOOTINGS ARE DESIGNED FOR THE SPECIFIC MODEL NUMBER LISTED WITH A 4 FOOT MAXIMUM LEG EXTENSION.
3. ANCHORS SHALL BE 3-3/4" ø ANCHOR BOLTS FOR EACH CORNER LEG EXTENSION AND 2-3/4" ø ANCHOR BOLT FOR EACH SIDE LEG EXTENSION. PROVIDE 2" x 2" x 1/4" PLATE WASHERS FOR EACH ANCHOR BOLT.
4. DRYER MUST BE LEVEL ALONG LENGTH AND WIDTH AT ALL TIMES DURING DRYING PROCESS.
5. CONCRETE SHALL HAVE A MINIMUM 28 DAY STRENGTH OF 3000 PSI.
6. REINFORCING STEEL SHALL BE ASTM A615 GRADE 60.
7. MINIMUM SOIL BEARING CAPACITY SHALL BE 1250 PSF.

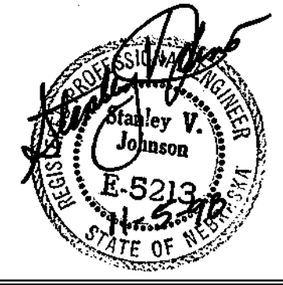

MILLER & ASSOCIATES CONSULTING ENGINEERS, P.C.

SCALE: NONE
PROJECT NO. 130-P167-002
DATE: JANUARY, 1997
DRAWN BY: BKS
APPROVED BY: SVJ
DRAWING NO. 6809

TITLE: FOUNDATION PLAN
DPX8T SERIES

DELUX MFG. CO.
AIR BASE ROAD
KEARNEY, NEBRASKA

DELUX DRAWING NO. 900-006323

SHEET 2 OF 2

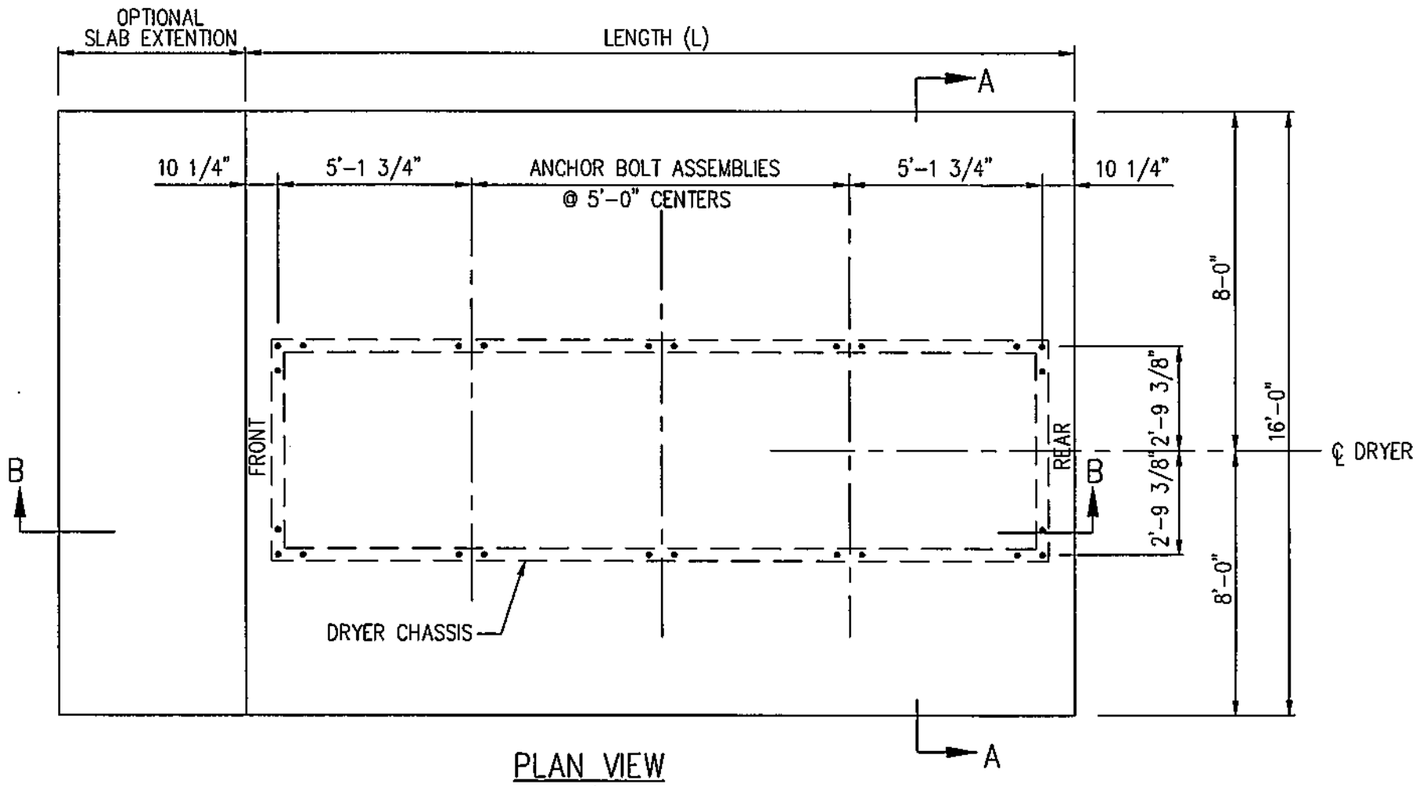

PLAN VIEW

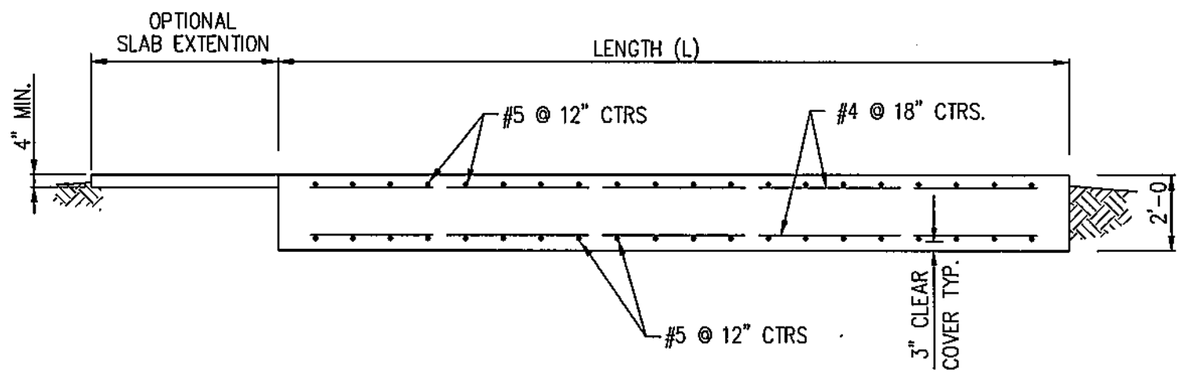

SECTION B-B

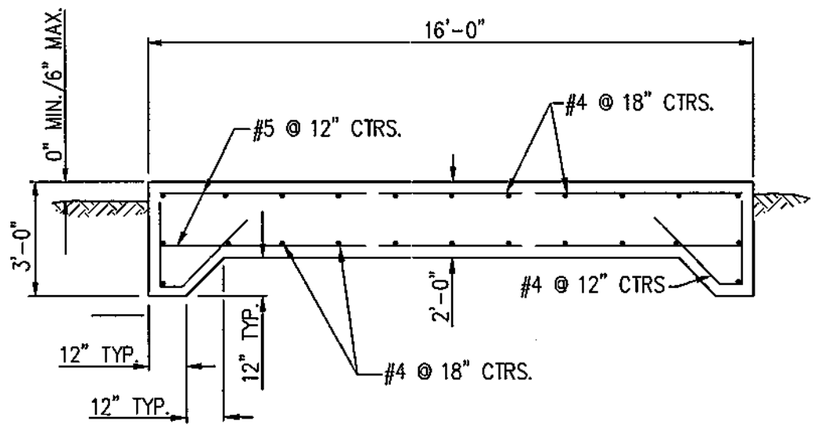

SECTION A-A

ECN	DATE	CHANGE	AUTH

NOTES:
1. "FRONT" INDICATES CONTROL PANEL END OF DRYER.
2. OPTIONAL SLAB EXTENSION IS FOR CONCRETE WORK AREA AT CONTROL PANEL END. A MINIMUM LENGTH OF 5 FEET SHOULD BE USED.

REGISTERED PROFESSIONAL ENGINEER
Stanley V. Johnson
E-5213
STATE OF NEBRASKA

M&A
MILLER & ASSOCIATES CONSULTING ENGINEERS, P.C.

SCALE: 1/4" = 1'-0"
PROJECT NO. 130-P167-003
DATE: FEBRUARY 2000
DRAWN BY: GLB
APPROVED BY: SVJ
DRAWING NO. 9185

TITLE: FOUNDATION PLAN
DPX12T SERIES

DELUX MFG. CO.
AIR BASE ROAD
KEARNEY, NEBRASKA

DELUX DRAWING NO. 900-007220
SHEET 1 OF 2

MODEL NO.	FOOTING LENGTH (L)	CONCRETE C.Y.	REINF. STEEL	ANCHOR BOLT ASSEMBLIES	
				CORNER	SIDE
DPX12T 7250	12'	15.6	26-#5x 15'-6"	4	2
			24-#4x 11'-6"		
			26-#4x 6'-0" BENT		
DPX12T 10860	17'	22.0	36-#5x 15'-6"	4	4
			24-#4x 16'-6"		
			36-#4x 6'-0" BENT		
DPX12T 144100	22'	28.5	46-#5x 15'-6"	4	6
			24-#4x 21'-6"		
			46-#4x 6'-0" BENT		
DPX12T 175120	27'	35.1	56-#5x 15'-6"	4	8
			24-#4x 26'-6"		
			56-#4x 6'-0" BENT		
DPX12T 216150	32'	41.5	66-#5x 15'-6"	4	10
			24-#4x 31'-6"		
			66-#4x 6'-0" BENT		
DPX12T 288200	42'	54.4	86-#5x 15'-6"	4	14
			24-#4x 41'-6"		
			86-#4x 6'-0" BENT		

NOTES:
QUANTITY OF CONCRETE SHOWN IN THIS TABLE IS BASED ON THE NEAT FOOTING DIMENSIONS AND IS PROVIDED FOR INFORMATION ONLY. ACTUAL QUANTITY REQUIRED MAY VARY BASED ON EXCAVATION DIMENSIONS, OPTIONAL SLAB EXTENSION AND YIELD OF CONCRETE SUPPLIED.

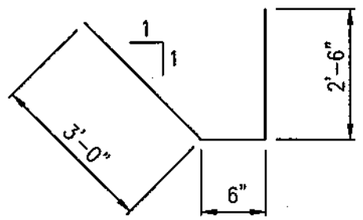

BENDING DIAGRAM
FOR #4 REBAR

ECN	DATE	CHANGE	AUTH

GENERAL NOTES

1. THIS FOOTING IS DESIGNED IN ACCORDANCE WITH THE 1994 UNIFORM BUILDING CODE. BASIC WIND SPEED IS 80 MPH, EXPOSURE C.
2. FOOTINGS ARE DESIGNED FOR THE SPECIFIC MODEL NUMBER LISTED WITH A 4 FOOT MAXIMUM LEG EXTENSION.
3. ANCHORS SHALL BE 3-3/4" ø ANCHOR BOLTS FOR EACH CORNER LEG EXTENSION AND 2-3/4" ø ANCHOR BOLT FOR EACH SIDE LEG EXTENSION. PROVIDE 2" x 2" x 1/4" PLATE WASHERS FOR EACH ANCHOR BOLT.
4. DRYER MUST BE LEVEL ALONG LENGTH AND WIDTH AT ALL TIMES DURING DRYING PROCESS.
5. CONCRETE SHALL HAVE A MINIMUM 28 DAY STRENGTH OF 3000 PSI.
6. REINFORCING STEEL SHALL BE ASTM A615 GRADE 60.
7. MINIMUM SOIL BEARING CAPACITY SHALL BE 1250 PSF.



M&A
MILLER & ASSOCIATES CONSULTING ENGINEERS, P.C.

SCALE: NONE
PROJECT NO. 130-P167-002
DATE: JANUARY, 1997
DRAWN BY: BKS
APPROVED BY: SVJ
DRAWING NO. 9184

TITLE: FOUNDATION PLAN
DPX12T SERIES

DELUX MFG. CO.
AIR BASE ROAD
KEARNEY, NEBRASKA

DELUX DRAWING NO. 900-007220
SHEET 2 OF 2

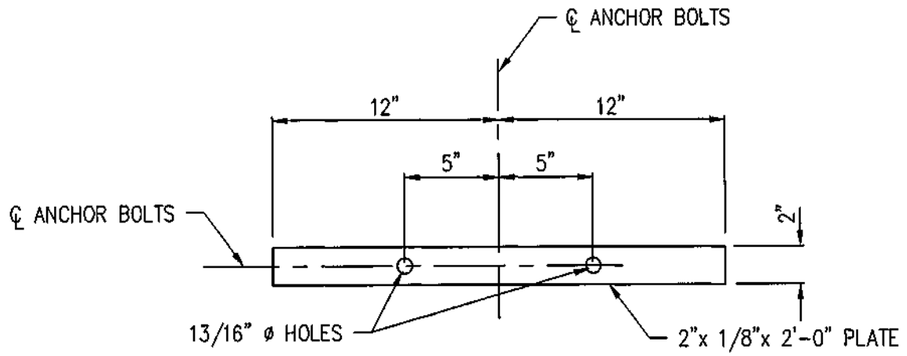

PLATE

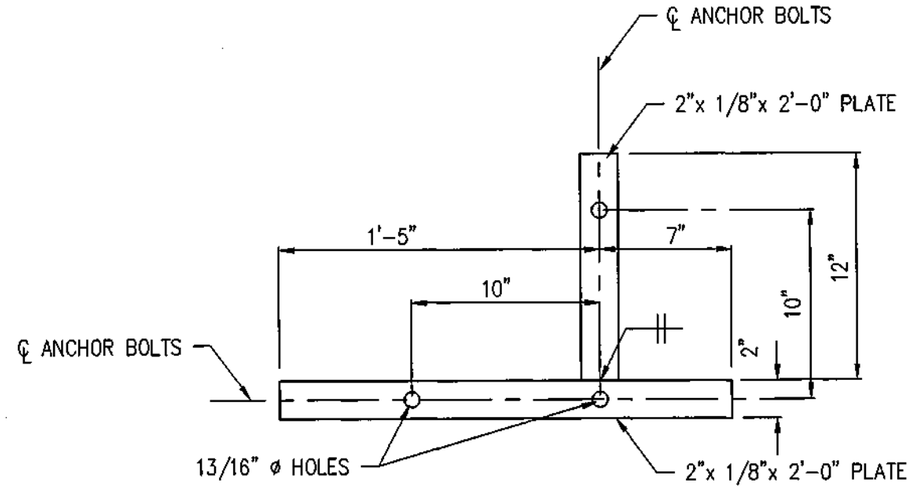

PLATE

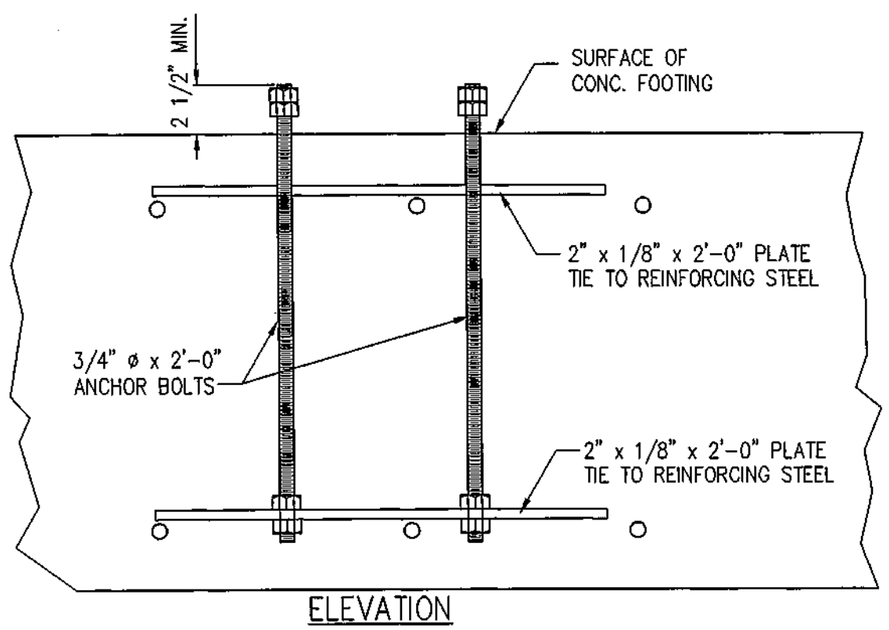

ELEVATION

SIDE ANCHOR BOLT ASSEMBLY

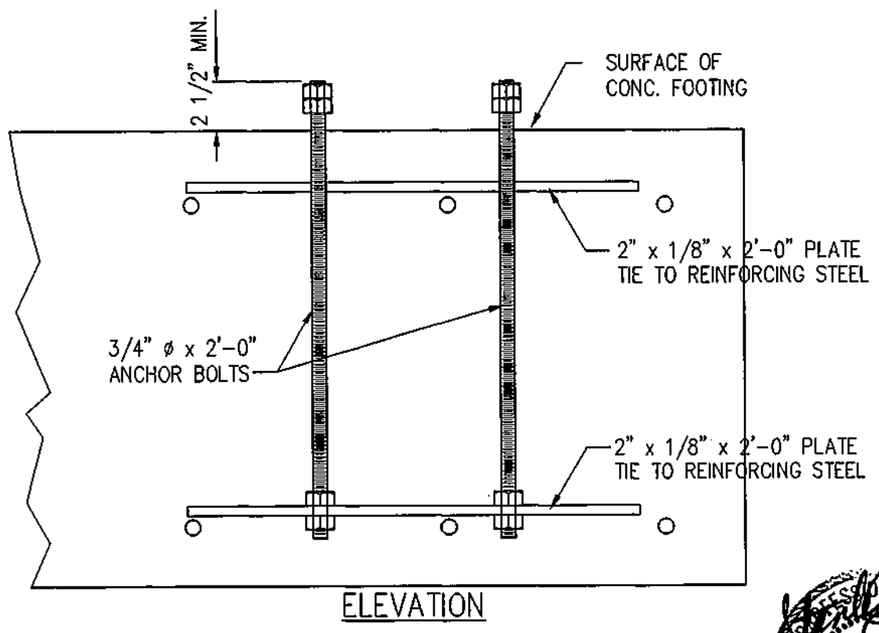

ELEVATION

CORNER ANCHOR BOLT ASSEMBLY

MILLER & ASSOCIATES CONSULTING ENGINEERS, P.C.

SCALE:

PROJECT NO. 130-P167-002

DATE: JANUARY, 1997

DRAWN BY: BKS

APPROVED BY: SVJ

DRAWING NO. 69038

TITLE: **ANCHORS**
DPX4T AND DPXST SERIES

DELUX MFG. CO.
AIR BASE ROAD
KEARNEY, NEBRASKA

REGISTERED PROFESSIONAL ENGINEER
Stanley V. Johnson
11-11-97
E-5213
STATE OF NEBRASKA

DELUX DRAWING NO. 900-006327

SHEET 1 OF 1

NOV 11, 1997 * 10:55:32 Q:\PROJECTS\130P167\130SHT10

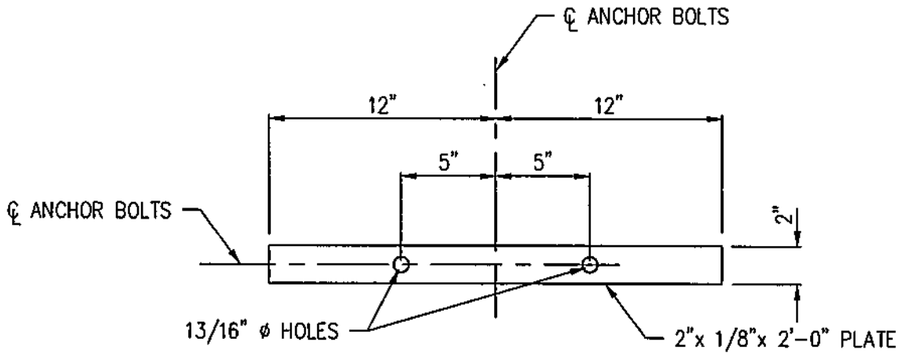

PLATE

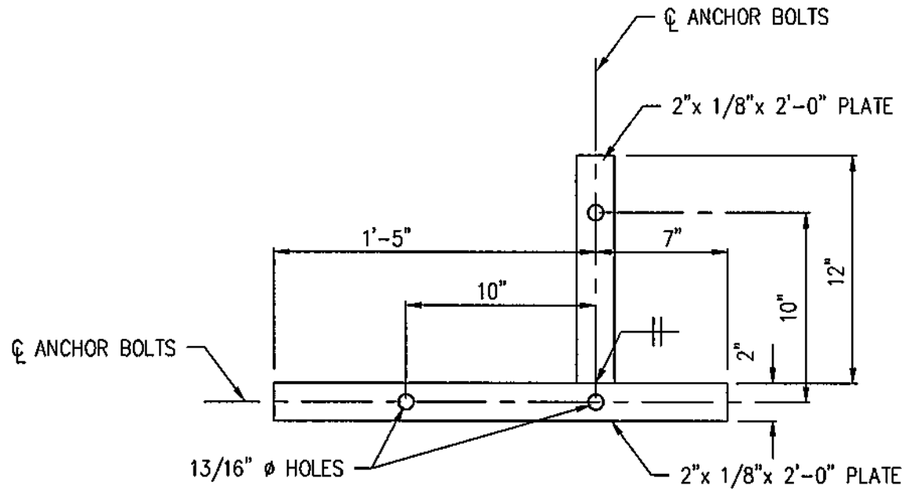

PLATE

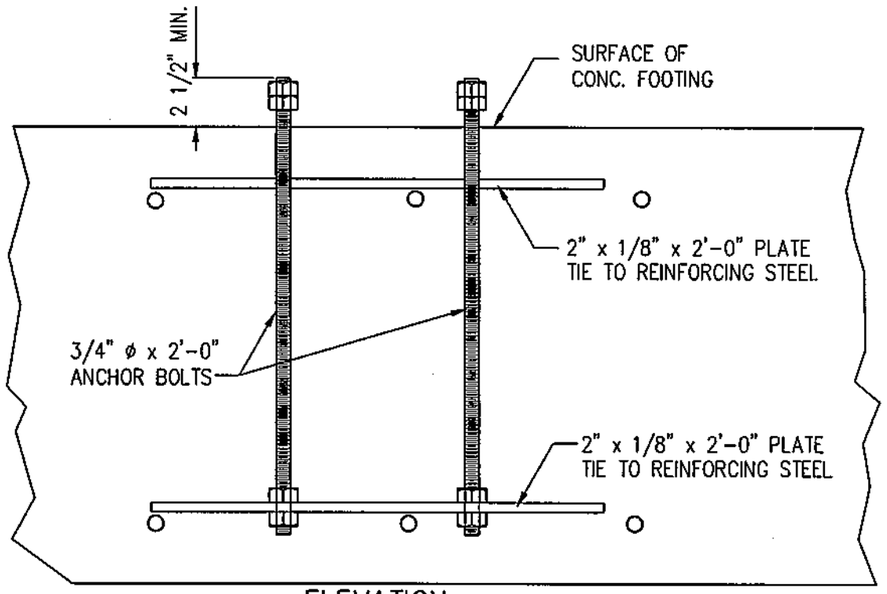

ELEVATION

SIDE ANCHOR BOLT ASSEMBLY

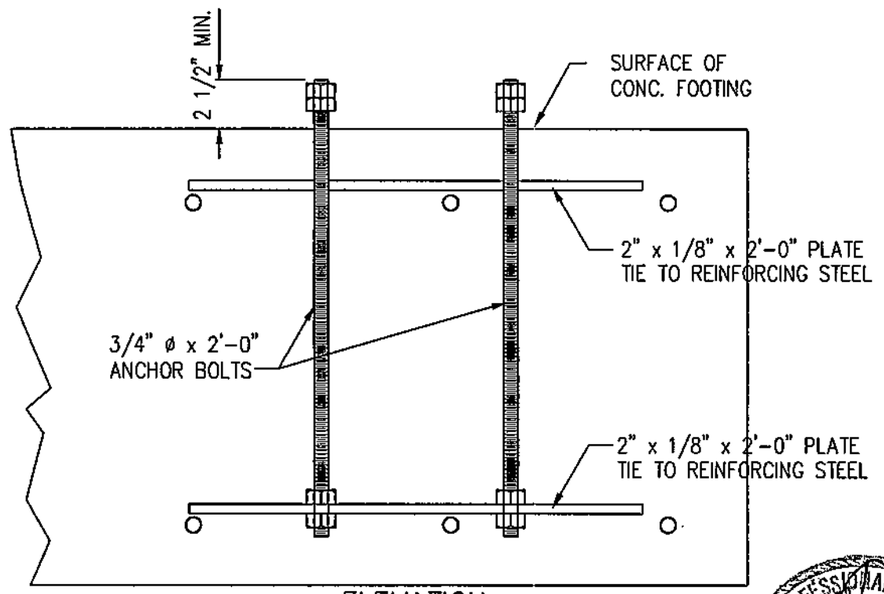

ELEVATION

CORNER ANCHOR BOLT ASSEMBLY

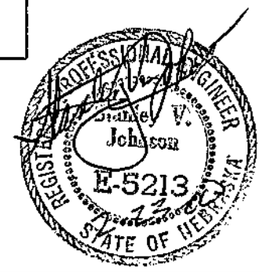

MILLER & ASSOCIATES CONSULTING ENGINEERS, P.C.

SCALE:

PROJECT NO. 130-P167-002

DATE: JANUARY, 1997

DRAWN BY: BKS

APPROVED BY: SWJ

DRAWING NO. 9183

TITLE: ANCHORS DPX12T SERIES

DELUX MFG. CO.
AIR BASE ROAD
KEARNEY, NEBRASKA

DELUX DRAWING NO. 900-007221

SHEET 1 OF 1

FEB 07, 2000 • 10:12:38 C:\Projects\130\130-p167-003\12-1-1.dwg

ECN	DATE	CHANGE	AUTH

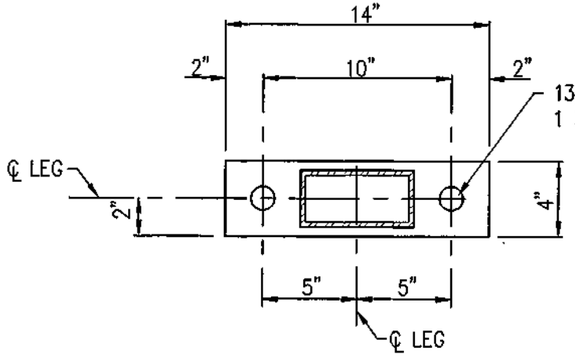

PLAN

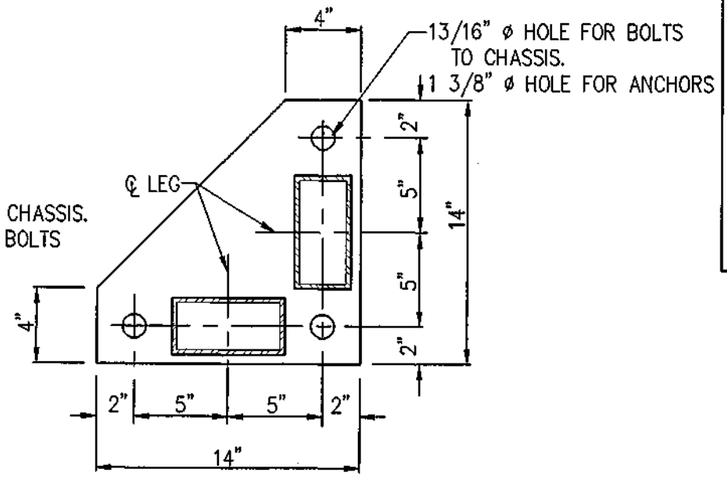

PLAN

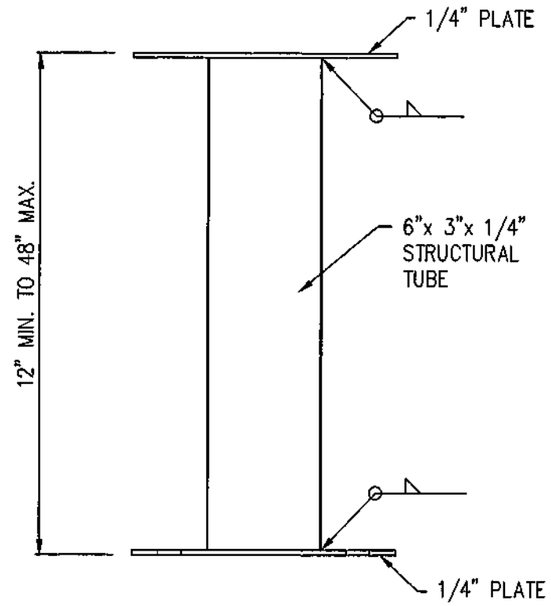

ELEVATION OF
SIDE LEG EXTENSION

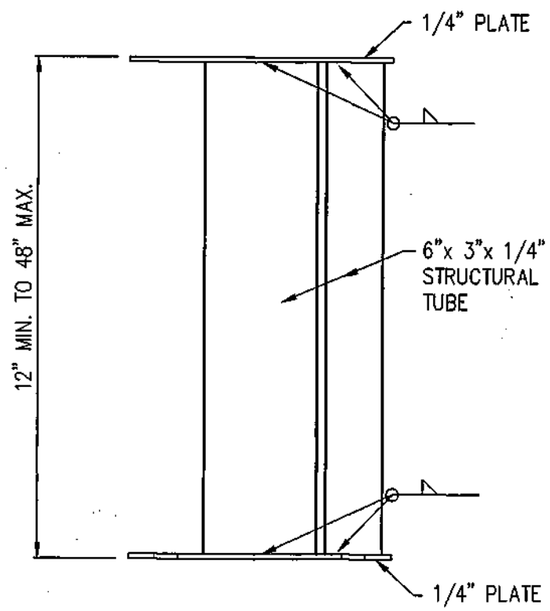

ELEVATION OF
CORNER LEG EXTENSION

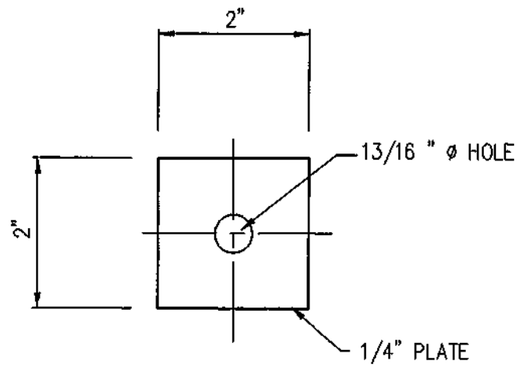

PLATE WASHER

NTS

Stanley V. Johnson
11-11-97
E-5213
REGISTERED PROFESSIONAL ENGINEER
STATE OF NEBRASKA

MILLER & ASSOCIATES CONSULTING ENGINEERS, P.C.

SCALE: 1 1/2" = 1'-0"
PROJECT NO. 130-P167-002
DATE: JANUARY, 1997
DRAWN BY: BKS
APPROVED BY: SVJ
DRAWING NO. 6803C

LEG EXTENSION

DPX4T AND DPX8T SERIES

TITLE:

DELUX MFG. CO.
AIR BASE ROAD
KEARNEY, NEBRASKA

DELUX DRAWING NO.
900-006328

SHEET 1 OF 1

NOV 13, 1997 • 11:09:12 C:\PROJECTS\130P1067\130SHT1

ITEM	PART NUMBER	QTY	DESCRIPTION
1	100-010344	2	TOP & BOTTOM-PLENUM & COOLING DOOR-GALV. FRAME
2	100-010345	2	LEFT & RIGHT-PLENUM DOOR-GALV. FRAME
3	100-010353	3	HINGE SUPPORT-PLENUM & COOLING DOOR-GALV. FRAME
4	300-010404	1	SUB-ASSY.-PLENUM DOOR
5	040-005321	24	BOLT - WHIZLOCK HEX - 5/16-18UNC X 3/4
6	040-001459	24	NUT - WHIZLOCK HEX - 5/16-18UNC
7	040-001434	3	BOLT - HEX - 5/16-18UNC X 3/4
8	040-004068	3	NUT - NYLON LOCK - 5/16-18UNC

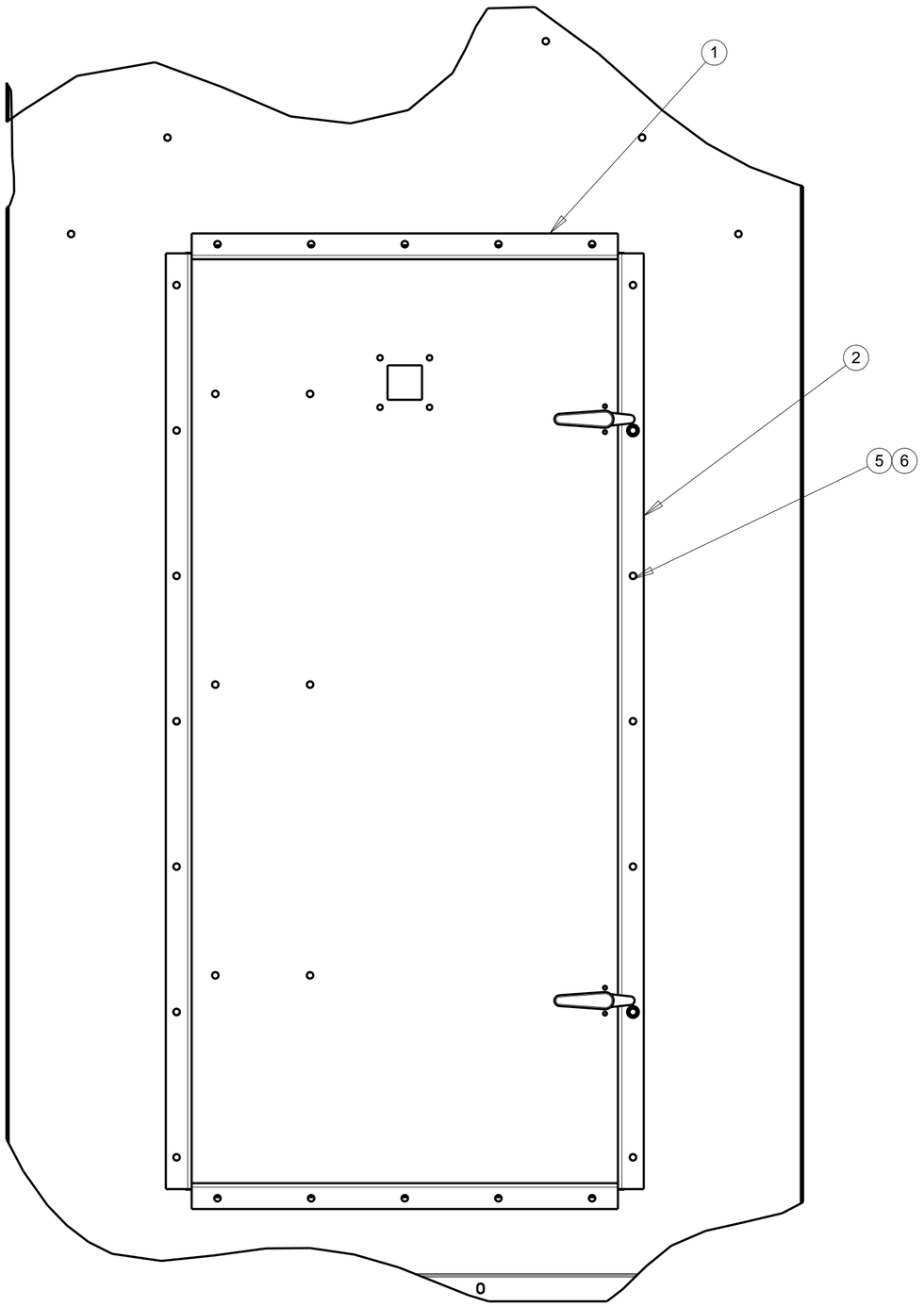

OUTSIDE OF DRYER

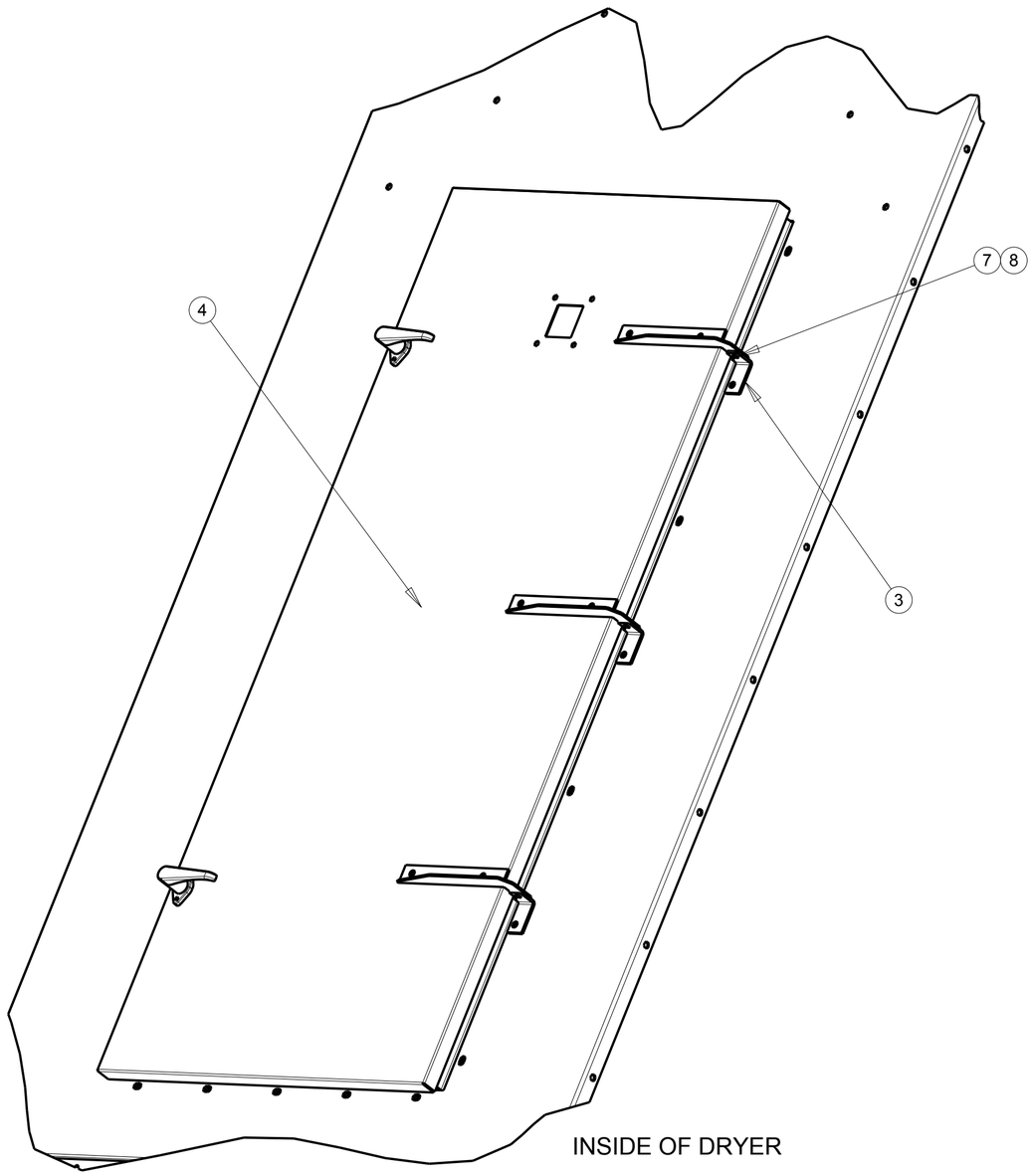

INSIDE OF DRYER

				PART NO.:		900-010576
				DESCRIPTION:		**ILLUSTRATION-PLENUM DOOR ASSEMBLY**
				MODELED BY:		**M. LANTZER**
				THICKNESS:		**NA**
				MATERIAL:		
				SCALE:	0.156	**DELUX MFG. CO.** KEARNEY, NE
				DATE:	Jun-24-13	
ECO#	LET	DESCRIPTION	DATE	**USED ON:**		

TOLERANCE: DECIMAL ±.010 FRACTION ±1/32 ANGLE ±1° UNLESS OTHERWISE SPECIFIED

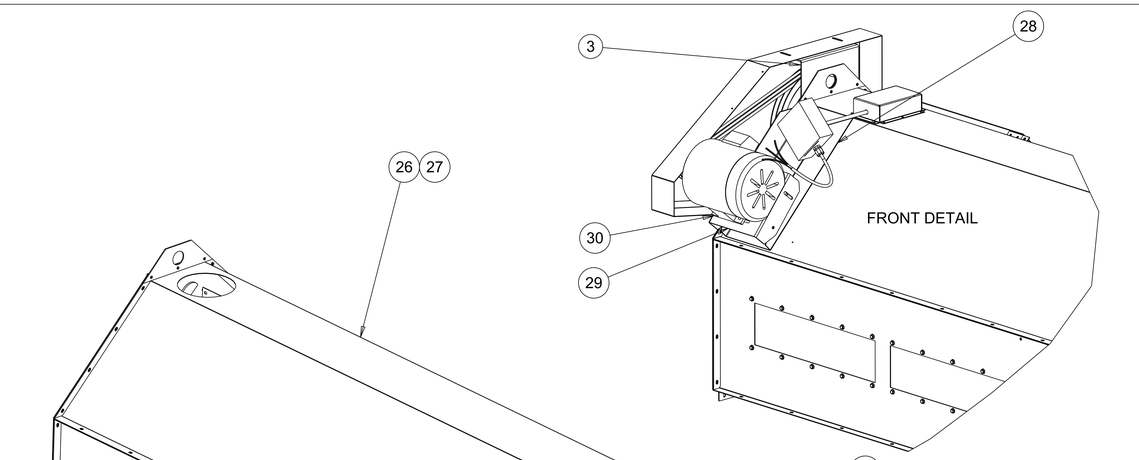

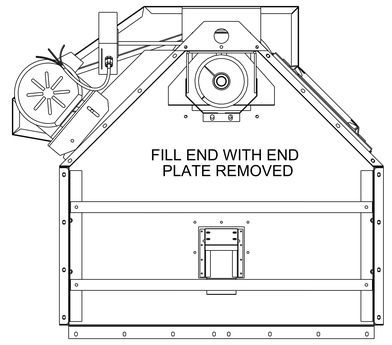

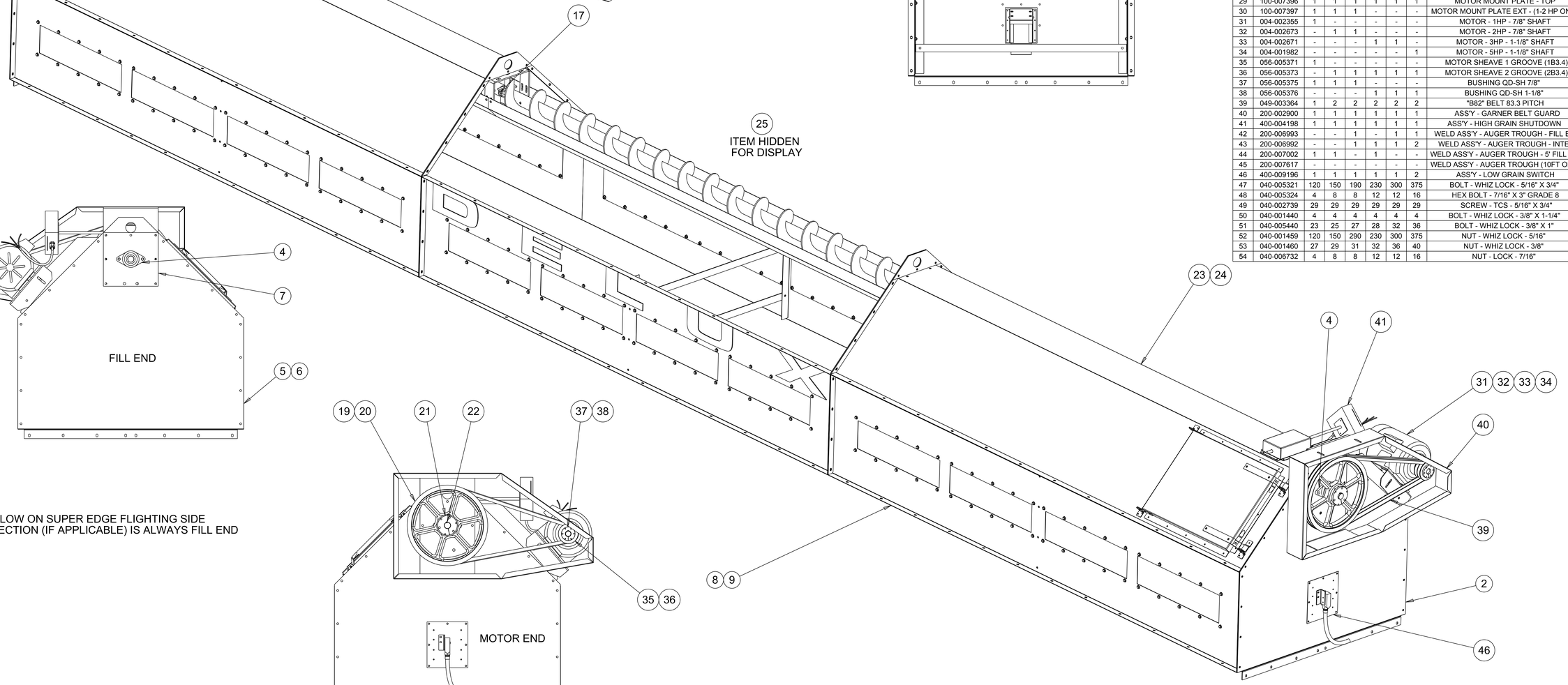

NOTES:

1) GRAIN FLOW ON SUPER EDGE FLIGHTING SIDE
2) IF 5FT SECTION (IF APPLICABLE) IS ALWAYS FILL END

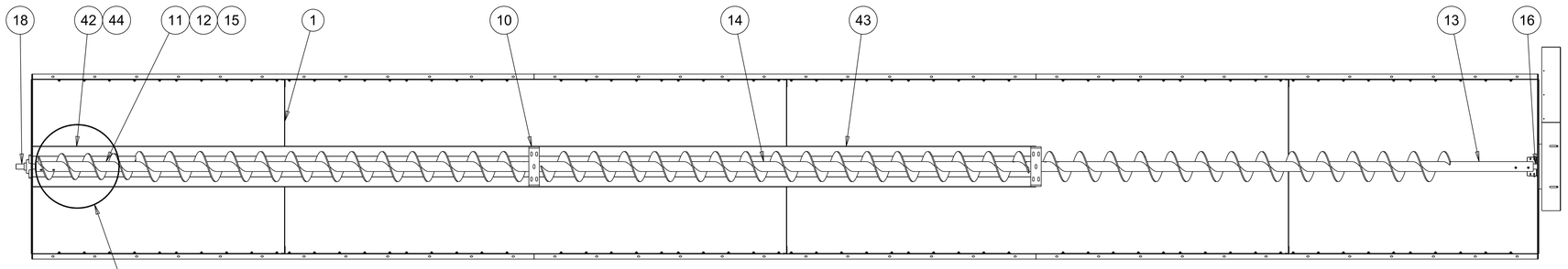

SCALE 0.078

ITEM	PART NO.	QUANTITY 10FT	15FT	20FT	25FT	30FT	40FT	DESCRIPTION
1	100-002599	2	2	4	4	6	8	CROSS STRAP
2	100-002852	1	1	1	1	1	1	END PLATE - FRONT
3	100-006824	1	1	1	1	1	1	LEVELING AUGER HEAD PLATE - FRONT
4	044-001510	2	2	2	2	2	2	1-1/4 FLANGE BEARING
5	100-006819	1	1	1	1	1	-	END PLATE - REAR
6	100-006820	-	-	-	-	-	1	END PLATE - REAR (40FT ONLY)
7	100-006825	1	1	1	1	1	1	LEVELING AUGER HEAD PLATE
8	200-007566	-	2	-	2	-	-	ASSEMBLY - GARNER SIDE 22" - 5'
9	200-007564	2	2	4	4	6	8	WELD ASS'Y - GARNER SIDE 22" - 10'
10	400-006827	-	1	1	2	2	3	ASS'Y - SUPPORT HANGER
11	200-006720	-	1	1	1	1	1	WELD ASS'Y - FILL END LEVELING AUGER - 10'
12	200-006834	1	-	-	-	-	-	WELD ASS'Y - 10' AUGER (10FT ONLY)
13	200-006723		1	1	1	1	1	WELD ASS'Y - MOTOR END - LEV. AUGER 10'
14	200-006724	-	-	-	1	1	2	WELD ASS'Y - INTERM. LEVELING AUGER
15	200-006721	-	1	-	1	-	-	WELD ASS'Y - FILL END LEV. AUGER - 5'
16	100-006727	1	1	1	1	1	1	MOTOR END LEVELING AUGER SHAFT
17	100-006726	-	1	1	2	2	3	INTERMEDIATE LEVELING AUGER SHAFT
18	100-006728	1	1	1	1	1	1	FILL END LEVELING AUGER SHAFT
19	056-005370	1	-	-	-	-	-	AUGER SHEAVE 1 GROOVE (1B18.4)
20	056-005372	-	1	1	1	1	1	AUGER SHEAVE 2 GROOVE (2B18.4)
21	056-006830	1	1	1	1	1	1	BUSHING QD-SK 1-1/4"
22	100-002486	2	2	2	2	2	2	KEY 1/4" X 1/4" X 1"
23	200-002978	1	-	-	-	-	-	WELDED ASS'Y - GARNER TOP (10' ONLY)
24	200-002974	-	1	1	1	1	1	WELD ASS'Y - GARNER TOP - MOTOR END
25	200-002976	-	-	-	1	1	2	WELDED ASS'Y - GARNER TOP - INTERM.
26	200-002978	-	-	1	-	1	1	WELDED ASS'Y - GARNER TOP - FILL END
27	200-005516	-	1	-	1	-	-	WELD ASS'Y - GARNER TOP - FILL END 5'
28	100-002855	1	1	1	1	1	1	MOTOR MOUNT PLATE - BOTTOM
29	100-007396	1	1	1	1	1	1	MOTOR MOUNT PLATE - TOP
30	100-007397	1	1	1	-	-	-	MOTOR MOUNT PLATE EXT - (1-2 HP ONLY)
31	004-002355	1	-	-	-	-	-	MOTOR - 1HP - 7/8" SHAFT
32	004-002673	-	1	1	-	-	-	MOTOR - 2HP - 7/8" SHAFT
33	004-002671	-	-	-	1	1	-	MOTOR - 3HP - 1-1/8" SHAFT
34	004-001982	-	-	-	-	-	1	MOTOR - 5HP - 1-1/8" SHAFT
35	056-005371	1	-	-	-	-	-	MOTOR SHEAVE 1 GROOVE (1B3.4)
36	056-005373	-	1	1	1	1	1	MOTOR SHEAVE 2 GROOVE (2B3.4)
37	056-005375	1	1	1	-	-	-	BUSHING QD-SH 7/8"
38	056-005376	-	-	-	1	1	1	BUSHING QD-SH 1-1/8"
39	049-003364	1	2	2	2	2	2	"B82" BELT 83.3 PITCH
40	200-002900	1	1	1	1	1	1	ASS'Y - GARNER BELT GUARD
41	400-004198	1	1	1	1	1	1	ASS'Y - HIGH GRAIN SHUTDOWN
42	200-006993	-	-	1	-	1	1	WELD ASS'Y - AUGER TROUGH - FILL END
43	200-006992	-	-	1	1	1	2	WELD ASS'Y - AUGER TROUGH - INTER.
44	200-007002	1	1	-	1	-	-	WELD ASS'Y - AUGER TROUGH - 5' FILL END
45	200-007617	-	-	-	-	-	-	WELD ASS'Y - AUGER TROUGH (10FT ONLY)
46	400-009196	1	1	1	1	1	2	ASS'Y - LOW GRAIN SWITCH
47	040-005321	120	150	190	230	300	375	BOLT - WHIZ LOCK - 5/16" X 3/4"
48	040-005324	4	8	8	12	12	16	HEX BOLT - 7/16" X 3" GRADE 8
49	040-002739	29	29	29	29	29	29	SCREW - TCS - 5/16" X 3/4"
50	040-001440	4	4	4	4	4	4	BOLT - WHIZ LOCK - 3/8" X 1-1/4"
51	040-005440	23	25	27	28	32	36	BOLT - WHIZ LOCK - 3/8" X 1"
52	040-001459	120	150	290	230	300	375	NUT - WHIZ LOCK - 5/16"
53	040-001460	27	29	31	32	36	40	NUT - WHIZ LOCK - 3/8"
54	040-006732	4	8	8	12	12	16	NUT - LOCK - 7/16"

ECO#	LET	DESCRIPTION	DATE

DRAWN BY: JGW
DATE: 01/14/09
CHK'D:
SCALE: .125

DELUX MFG. CO.
KEARNEY, NE

USED ON:
NEXT ASS'Y:
MATL.
SHEAR SIZE

TITLE:
GARNER ASSEMBLY ILLUSTRATION
DP/DPSL ILLUSTRATION
(STARTING 2010)

DRAWING NO. 900-009194

TOLERANCE: DECIMAL ± .#10 FRACTION ±1/32 ANGLE ±1 UNLESS OTHERWISE SPECIFIED

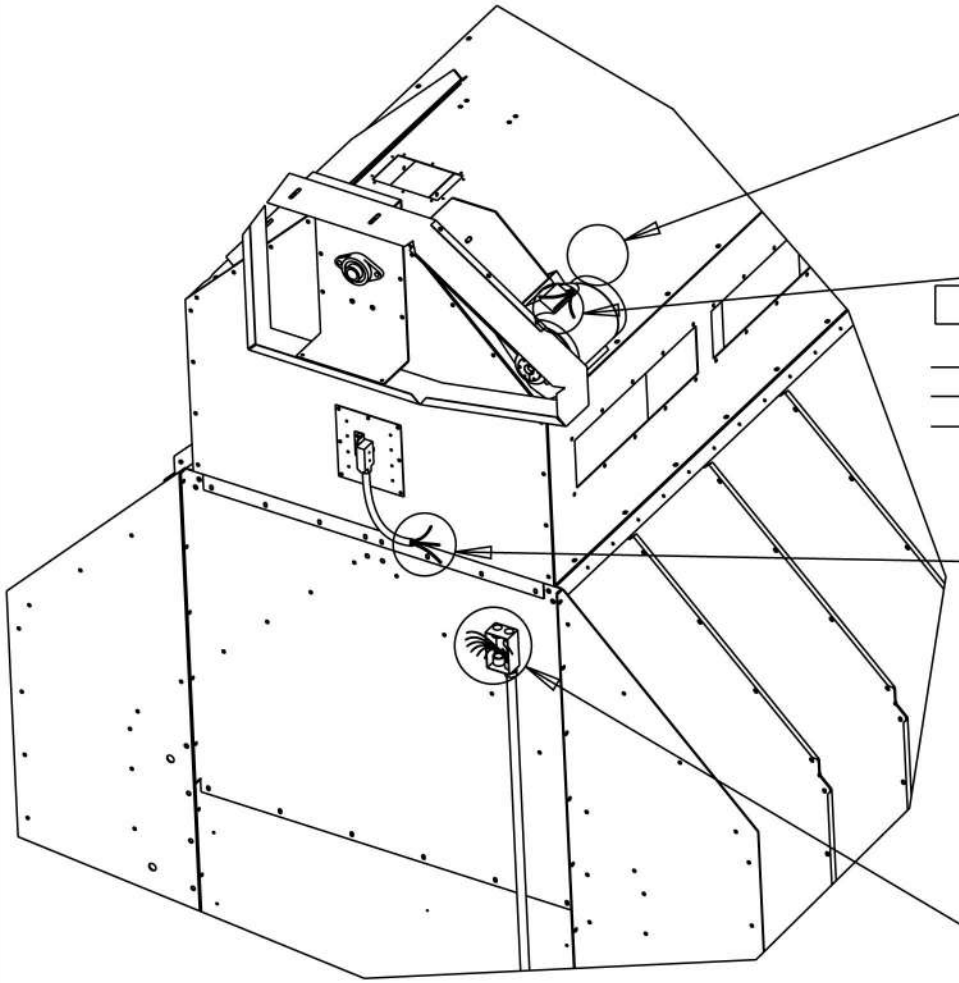

WIRING HOOKUP - HIGH GRAIN SWITCH

HIGH GRAIN WIRES		JUNCTION BOX WIRES
BLACK	⟷	BLACK
WHITE	⟷	BLACK/WHITE
GREEN	⟷	BLACK/YELLOW

* WIRING HOOKUP - LEVELING AUGER

MOTOR LEAD		SEALTITE WIRES		JUNCTION BOX WIRES
L1	⟷	YELLOW	⟷	YELLOW
L2	⟷	ORANGE	⟷	ORANGE
L3	⟷	BROWN	⟷	BROWN

* WIRE CLUSTER'S WILL DEPEND ON VOLTAGE TYPE, REFER TO MANUFACTURER DIAGRAM

WIRING HOOKUP - LOW GRAIN SWITCH - *MOTOR END

LOW GRAIN WIRES		JUNCTION BOX WIRES
BLUE/BLACK	⟷	BLUE/BLACK
YELLOW/BLUE	⟷	YELLOW/BLUE
BLUE	⟷	BLUE

WIRING HOOKUP - LOW GRAIN SWITCH - *FILL END (40FT)

VIOLET	⟷	VIOLET
YELLOW/VIOLET	⟷	YELLOW/VIOLET
VIOLET/WHITE	⟷	VIOLET/WHITE

ECO#	LET	DESCRIPTION	DATE

DRAWN BY: JGW

DATE: 12/12/09

CHK'D:

SCALE: .050

DELUX MFG. CO.
KEARNEY, NE

USED ON:

NEXT ASS'Y:

MATL.

SHEAR SIZE

TITLE:
GARNER WIRING ILLUSTRATION
DP/DPSL/DPXSL/4T/8T/12T
STARTING WITH 2010 MODELS

DRAWING NO. 900-009193

TOLERANCE: DECIMAL ±.010 FRACTION ±1/32 ANGLE ±1° UNLESS OTHERWISE SPECIFIED

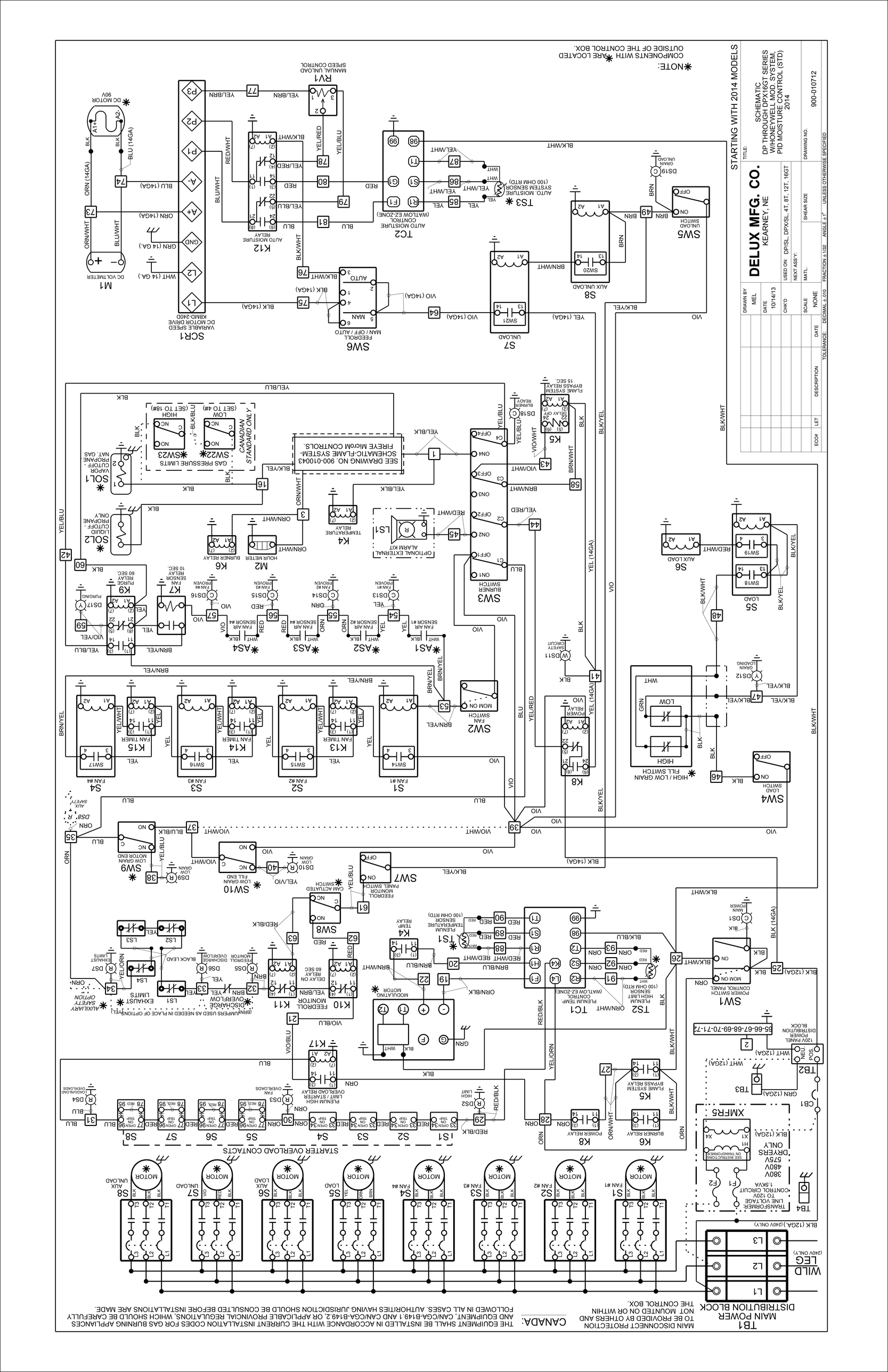
STARTING WITH 2014 MODELS
DELUXE MFG. CO.
KEARNEY, NE
SCHEMATIC
DP THROUGH DPX16GT SERIES
W/HONEYWELL MOD. SYSTEM.
PID MOISTURE CONTROL (STD)
2014
900-010712
DRAWN BY MEL
DATE 10/14/13
CHK'D
USED ON: DP/SL, DPX/SL, 4T, 8T, 12T, 16GT
NEXT ASS'Y:
MAT'L.
SHEAR SIZE
SCALE NONE
FRACTION ±1/32
ANGLE ±1°
UNLESS OTHERWISE SPECIFIED
TOLERANCE:
DECIMAL ± .010
DATE
DESCRIPTION
ECO#
LET
*NOTE:
COMPONENTS WITH * ARE LOCATED OUTSIDE OF THE CONTROL BOX.
TB1
MAIN POWER DISTRIBUTION BLOCK
MAIN DISCONNECT PROTECTION TO BE PROVIDED BY OTHERS AND NOT MOUNTED ON OR WITHIN THE CONTROL BOX.
CANADA:
THE EQUIPMENT SHALL BE INSTALLED IN ACCORDANCE WITH THE CURRENT INSTALLATION CODES FOR GAS BURNING APPLIANCES AND EQUIPMENT, CAN/CGA-B149.1 AND CAN/CGA-B149.2, OR APPLICABLE PROVINCIAL REGULATIONS, WHICH SHOULD BE CAREFULLY FOLLOWED IN ALL CASES. AUTHORITIES HAVING JURISDICTION SHOULD BE CONSULTED BEFORE INSTALLATIONS ARE MADE.
WILD LEG (240V ONLY)
L1
L2
L3
BLK (12GA.) (240V ONLY)
TB4
TRANSFORMER, LINE VOLTAGE TO 120V CONTROL CIRCUIT 1 KVA
F1
F2
380V 480V 575V DRYERS ONLY
SEE INSTRUCTIONS ON TRANSFORMER
H1
H4
X1
X4
BLK (12GA)
XMFR5
CB1
GRN (12GA)
TB3
WHT (12GA)
TB2
120V PANEL POWER DISTRIBUTION BLOCK
55-66-67-68-69-70-71-74
GRN
NEU
2
WHT (12GA)
SW1
POWER SWITCH CONTROL PANEL
MOM ON
BLK (14GA)
BLK (12GA)
DS1
MAIN POWER
TS2
PLENUM TEMP. CONTROL (MAT'LOW EZ-ZONE)
PLENUM HIGH LIMIT SENSOR (100 OHM RTD)
TS1
PLENUM TEMPERATURE SENSOR (100 OHM RTD)
TC1
MODULATING MOTOR
K17
K10
FEEDROLL MOUNTOR DELAY/BRN
K11
DELAY ON RELAY 60 SEC
K8
POWER RELAY
K6
BURNER RELAY
K5
FLAME SYSTEM BYPASS RELAY
STARTER OVERLOAD CONTACTS
S1 S2 S3 S4 S5 S6 S7 S8
MOTOR
FAN #1
FAN #2
FAN #3
FAN #4
LOAD
AUX LOAD
UNLOAD
AUX UNLOAD
OVERLOADS
PLENUM HIGH LIMIT / STARTER OVERLOAD RELAY
DS2
DS4
DS3
HIGH LIMIT
AUXILIARY SAFETY OPTION
EXHAUST LIMITS
DISCHARGE OVERFLOW
DS7
DS6
DS5
BLACK LEAD
DISCHARGE OVERFLOW
EXHAUST LIMITS
L1
L2
L3
L4
(BRN)JUMPERS USED AS NEEDED IN PLACE OF OPTIONS
SW7
CAM ACTUATED SWITCH
FEEDROLL MONITOR PANEL SWITCH
SW8
SW9
LOW GRAIN MOTOR END
SW10
LOW GRAIN FILL END
DS9
DS10
LOW GRAIN
SW2
FAN SWITCH
MOM ON
SW3
BURNER SWITCH
SW4
LOAD SWITCH
HIGH / LOW GRAIN FILL SWITCH
HIGH
LOW
SW5
SW6
FEEDROLL MAN / OFF / AUTO
SW20
AUX UNLOAD
S8
S7
SW21
UNLOAD
SCR1
VARIABLE SPEED DC MOTOR DRIVE KBMD-2400
P3
P2
P1
A-
A+
GND
L2
L1
DC MOTOR
90V
A1+
A2-
DC VOLTMETER
M1
RV1
MANUAL UNLOAD SPEED CONTROL
TC2
AUTO MOISTURE CONTROL (MAT'LOW EZ-ZONE)
K12
AUTO MOISTURE RELAY
TS3
AUTO MOISTURE SYSTEM SENSOR (100 OHM RTD)
DS19
DRAIN UNLOAD
SW23
CANADIAN STANDARD ONLY
SW22
GAS PRESSURE LIMITS
SOL1
VAPOR CUTOFF - PROPANE NAT. GAS
SOL2
LIQUID CUTOFF - PROPANE ONLY
K4
TEMPERATURE RELAY
LS1
OPTIONAL EXTERNAL ALARM KIT
M2
HOUR METER
K9
PURGE RELAY 60 SEC.
K7
FAN SENSOR RELAY 10 SEC.
K15 K14 K13 K16
FAN TIMER
AS1 AS2 AS3 AS4
FAN AIR SENSOR #1 #2 #3 #4
DS11
SAFETY CIRCUIT
DS12
DS13 DS14 DS15 DS16
FAN #1 #2 #3 #4 PROVEN
DS17
PURGING
DS18
BURNER READY
K18
FLAME SYSTEM BYPASS RELAY 15 SEC.
SEE DRAWING NO. 900-0100-43 SCHEMATIC-FLAME SYSTEM-FIREYE MicroM CONTROLS.
OPT1 OPT2 OPT3 OPT4
ON1 ON2 ON3 ON4
OFF1 OFF2 OFF3 OFF4
C1 C2 C3 C4
K1 K2 K3 K4
K5
K6
K8
K9
K10
K11
K12
K13
K14
K15
K16
K17
K18
SW1 SW2 SW3 SW4 SW5 SW6 SW7 SW8 SW9 SW10 SW11 SW12 SW13 SW14 SW15 SW16 SW17 SW18 SW19 SW20 SW21 SW22 SW23
S1 S2 S3 S4 S5 S6 S7 S8
TS1 TS2 TS3 TC1 TC2
M1 M2
SOL1 SOL2
SCR1
K1 K2 K3 K4 K5 K6 K7 K8 K9 K10 K11 K12 K13 K14 K15 K16 K17 K18
P1 P2 P3 A- A+ GND L1 L2
AT1+ AT1- A2-
RV1
SW6
SW7
SW8
SW9
SW10
SW11
SW12
SW13
SW14
SW15
SW16
SW17
SW18
SW19
SW20
SW21
SW22
SW23
DS1 DS2 DS3 DS4 DS5 DS6 DS7 DS9 DS10 DS11 DS12 DS13 DS14 DS15 DS16 DS17 DS18 DS19
AS1 AS2 AS3 AS4
LS1 LS2 LS3 LS4
TB1 TB2 TB3 TB4
CB1
XMFR5
F1 F2
H1 H4 X1 X4
BLK
WHT
RED
GRN
YEL
ORN
BRN
BLU
VIO
GRY
PNK
TAN
BRN/YEL
BRN/WHT
BRN/BLU
BLK/WHT
BLK/YEL
BLK/RED
BLU/WHT
BLU/BLK
BLU/RED
BLU/YEL
GRN/WHT
GRN/BLK
GRN/YEL
ORN/WHT
ORN/BLK
ORN/YEL
RED/WHT
RED/BLK
RED/YEL
VIO/WHT
VIO/BLK
VIO/BLU
VIO/RED
VIO/YEL
YEL/WHT
YEL/BLK
YEL/BLU
YEL/RED
YEL/ORN
BLK/ORN
BLK/GRN
BLK/BLU
BLK/RED
BLK/VIO
BLK/GRY
BLK/PNK
BLK/TAN
BLU (14GA)
ORN (14GA)
WHT (14 GA.)
GRN (14 GA.)
YEL (14GA)
VIO (14GA)
BLK (14GA)
BRN (14GA)
RED (14GA)
BLU (14GA)
YEL/BRN
RED/WHT
BLU/WHT
ORN/WHT
BLK/WHT
YEL/RED
YEL/BLU
BRN/WHT
BRN/YEL
BRN/BLU
VIO/WHT
VIO/BLK
VIO/BLU
VIO/RED
VIO/YEL
YEL/WHT
YEL/BLK
YEL/BLU
YEL/RED
YEL/ORN
BLK/ORN
BLK/GRN
BLK/BLU
BLK/RED
BLK/VIO
BLK/GRY
BLK/PNK
BLK/TAN
RED/BLK
RED/YEL
BLU/BLK
BLU/RED
BLU/YEL
GRN/BLK
GRN/YEL
ORN/BLK
ORN/YEL
BLK/WHT
BLK/YEL
BLK/RED
BLK/VIO
BLK/GRY
BLK/PNK
BLK/TAN
BLK/BLU
BLK/GRN
BLK/ORN
BLK/BLU
BLK/RED
BLK/VIO
BLK/GRY
BLK/PNK
BLK/TAN
BLK/BLU
BLK/GRN
BLK/ORN

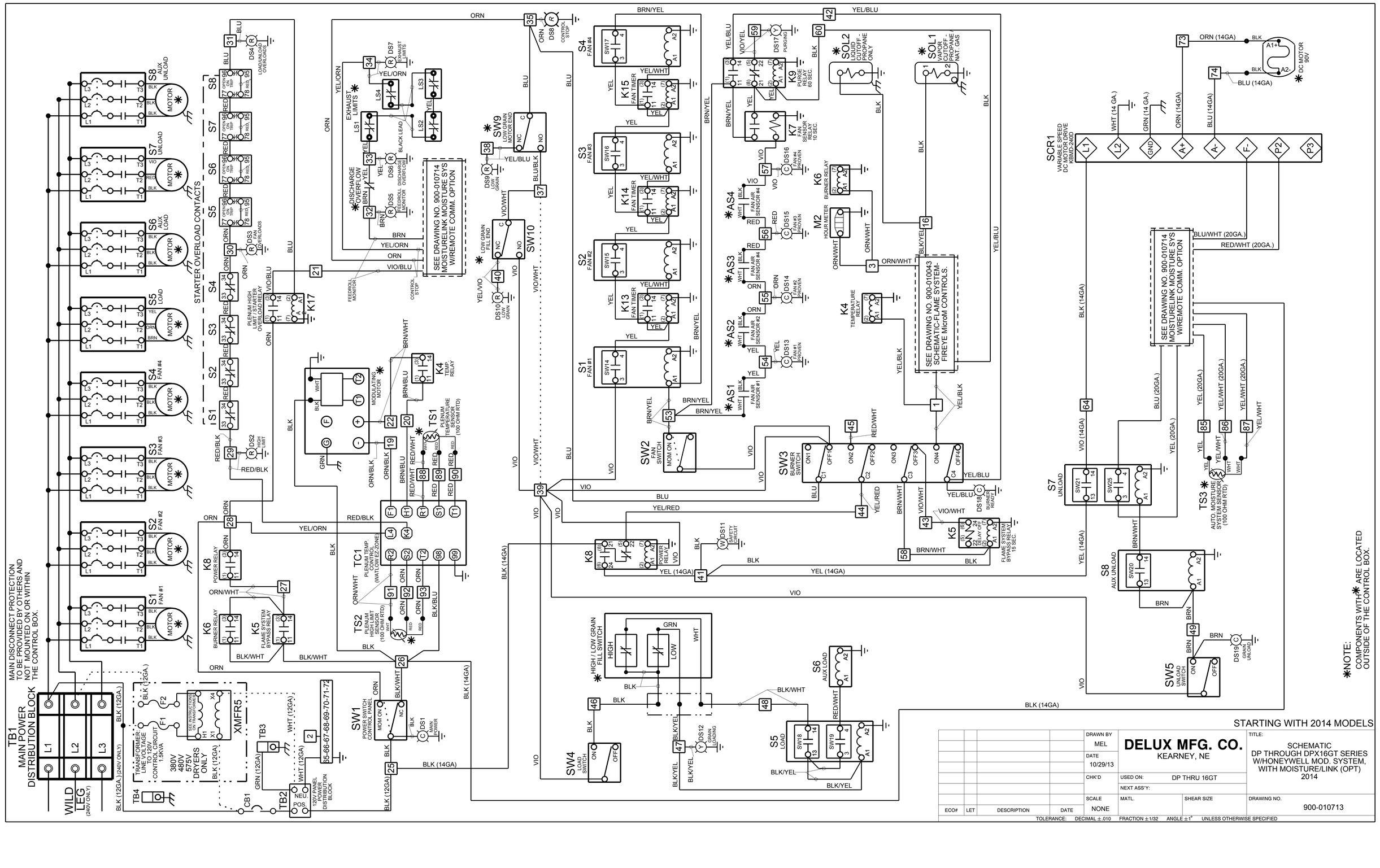

STARTING WITH 2014 MODELS

				DRAWN BY	MEL	**DELUX MFG. CO.** KEARNEY, NE	TITLE: SCHEMATIC DP THROUGH DPX16GT SERIES W/HONEYWELL MOD. SYSTEM, WITH MOISTURE/LINK (OPT) 2014
				DATE	10/29/13		
				CHK'D		USED ON: DP THRU 16GT	
						NEXT ASS'Y:	
ECO#	LET	DESCRIPTION	DATE	SCALE	NONE	MATL. / SHEAR SIZE	DRAWING NO. 900-010713

TOLERANCE: DECIMAL ±.010 FRACTION ±1/32 ANGLE ±1° UNLESS OTHERWISE SPECIFIED

ITEM	PART NUMBER	QTY	DESCRIPTION

SAMPLER
AC GEARMOTOR
MOTOR
GRN --> BRN
BRN --> GRN/YEL
BLK --> BLK
GRN/YEL
BLK 1
BLK 0
BLU
WHT --> BLU
BLK --> BLK
WHT --> WHT
JB3
JB4
FB1
2AMP
FAST-ACTING
XFMR7 (24VDC)
WHT/BLU
BLU
FB2
2AMP
FAST-ACTING
24VDC
0VDC
WHT/BLU
BLU
RED/WHT
BLU/WHT
YEL
YEL/WHT
BLU
WHT/BLU
IO1
PORT 1
PORT 2
I/O COM. BASE
+24VDC
-VDC
GND
IO2
ANALOG IN/OUT CARD
OUTPUT INPUT
CH1+
CH1-
CH2+
CH2-
NC
+24VDC
-VDC
WHT
GRN
RED
BLK
TERMINATE DRAIN
WIRE TO EARTH
GROUND
IO3
DIGITAL IN/OUT CARD
A1
A2
A3
A4
A5
A6
A7
A8
ACOM
B1
B2
B3
B4
B5
B6
B7
B8
BCOM
WHT/RED
WHT/BLU
IO4
RTD CARD
CH1
CH2
CH3
CH4
C
S
E
NC
+24VDC
-VDC
ISOLATION
CARD
IC1
M
K
J
G
A
C
YEL
CONNECT DRAIN SHIELD
WIRES TOGETHER
BRAIDED WIRE --> GRAY
RED --> BLU
BLK --> BLK
WHT --> WHT
GRN --> BRN
JB2
BLU --> BRN
WHT/BLU --> BLU
YEL --> BLK
JB1
FEEDROLL
PROXIMITY SENSOR
OUTLET
MOISTURE
SENSOR
WATLOW ELECTRONIC
TEMPERATURE CONTROL
CA
CB
CC
ORN
WHT/ORN
GRN
MD1
CELLULAR MODEM
+24VDC
-VDC
GND
HORNER XL6E CONTROLLER
MOISTURE Link
MJ1
MJ2
ETH
USB A
MICRO SD CARD
MINI USB
WHT/BLU
VIO/BLU
BRN
K19
FEEDROLL
MONITOR RELAY
YEL/ORN
ORN
K18
CONTROL
STOP RELAY
14
13
SW24
DISCHARGE
SAMPLE SWITCH
YEL
BRN
TERMINAL #71 NEUTRAL (16 GA - WHT)
TERMINAL #72 NEUTRAL (16 GA - WHT)
TERMINAL #64 (16GA - BLK)
TERMINAL #26 (16GA - BLK)
TERMINAL P2 - KB DC DRIVE (16GA - RED/WHT)
TERMINAL F - KB DC DRIVE (16GA - BLU/WHT)
TERMINAL #85 (16GA - YEL)
TERMINAL #86 (16GA - YEL/WHT)
TERMINAL #87 (16GA - YEL/WHT)
TERMINAL #4 - SW21 - (16GA - BLU)
TERMINAL #3 - SW21 - (16GA - YEL)
TERMINAL #21 (16GA - VIO/BLU)
TERMINAL #32 (16GA - BRN)
TERMINAL #34 (16GA - YEL/ORN)
TERMINAL #35 (16GA - ORN)

				PART NO.:	900-010714
				DESCRIPTION:	**SCHEMATIC-MoistureLink AMC-W/ETHERNET I/O BASE - 2014**
				MODELED BY:	**J. WEAVER**
				THICKNESS:	
				MATERIAL:	
				SCALE:	NONE
				DATE:	Oct-30-13
ECO#	LET	DESCRIPTION	DATE	**USED ON:**	

DELUX MFG. CO.
KEARNEY, NE

TOLERANCE: DECIMAL ±.010 FRACTION ±1/32 ANGLE ±1° UNLESS OTHERWISE SPECIFIED

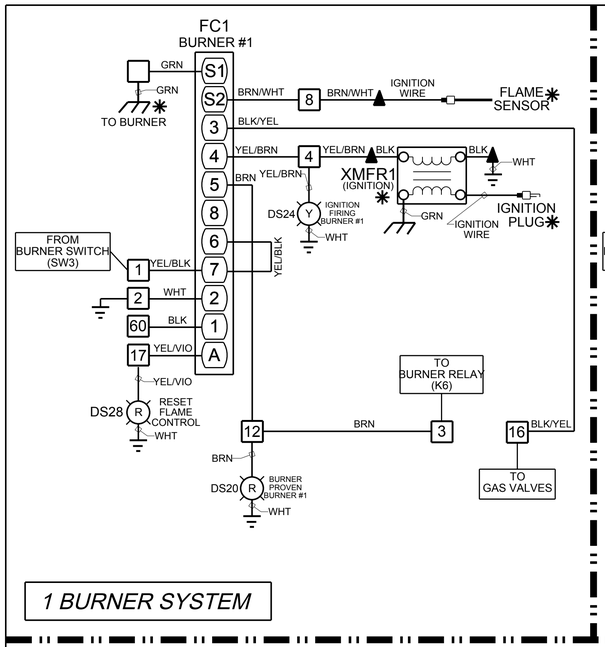

1 BURNER SYSTEM

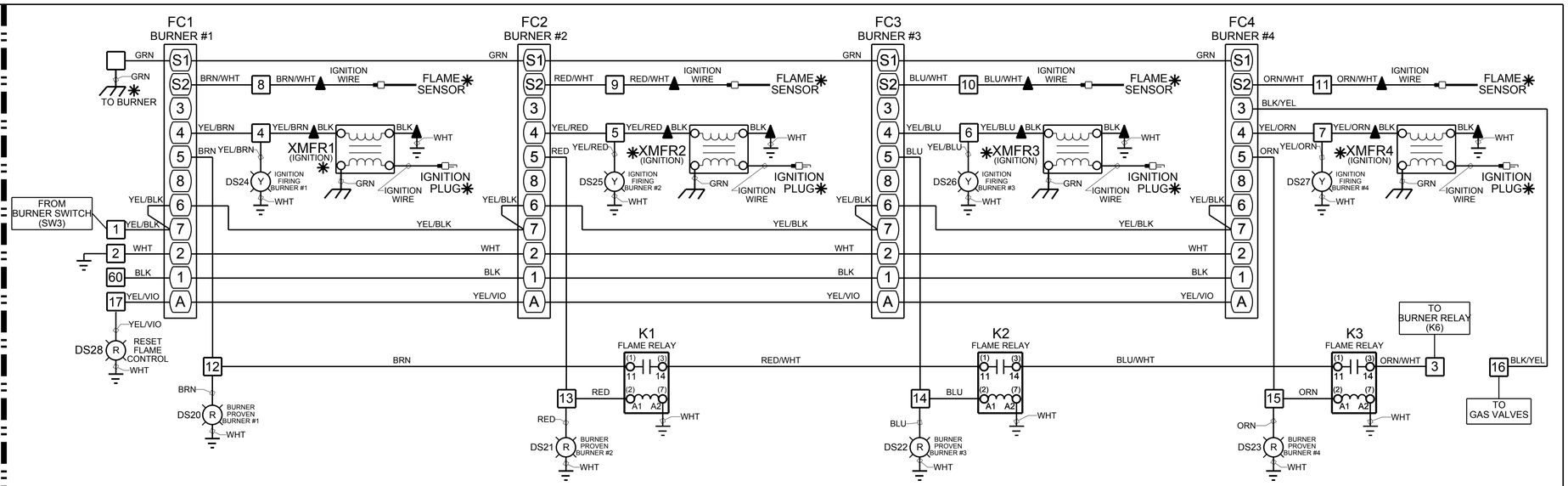

4 BURNER SYSTEM

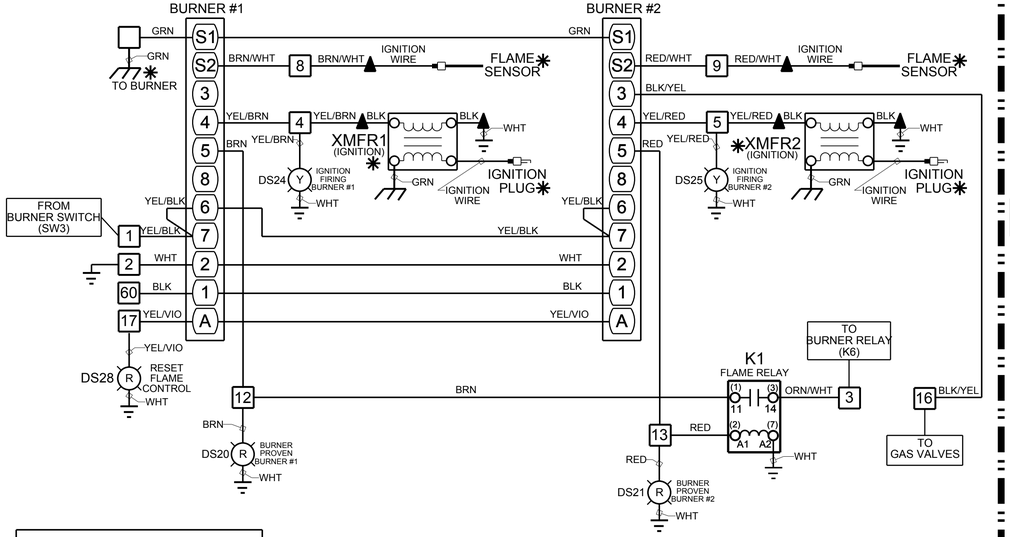

2 BURNER SYSTEM

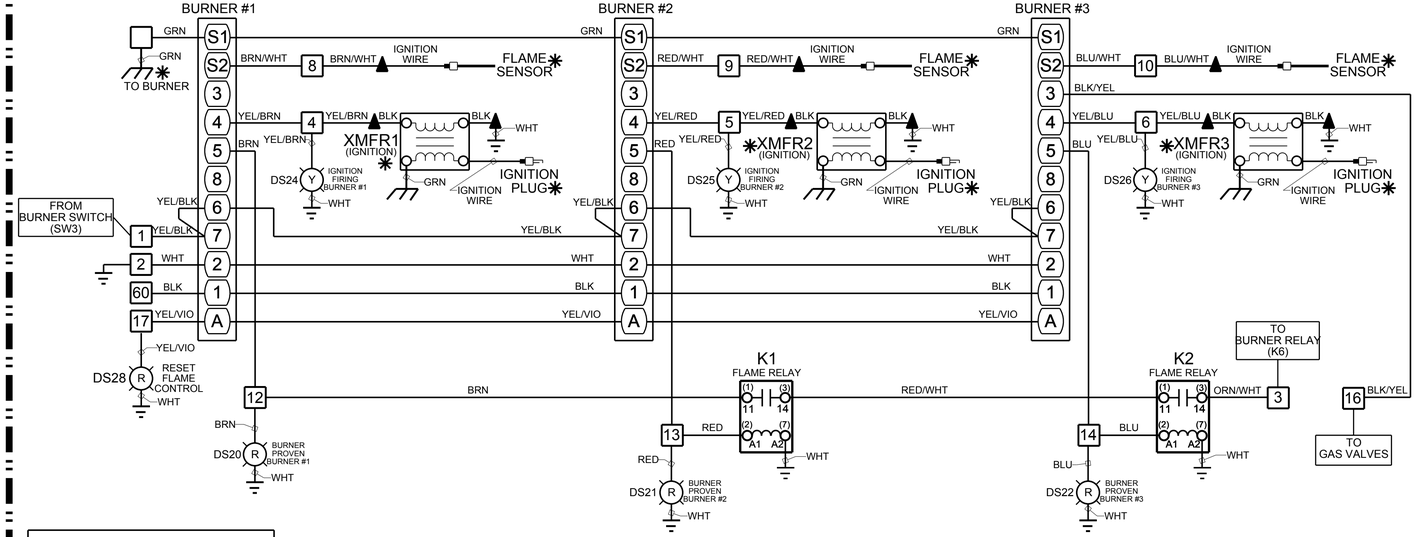

3 BURNER SYSTEM

✱NOTE COMPONENTS WITH ✱ ARE LOCATED OUTSIDE OF THE CONTROL BOX.

STARTING WITH 2012 MODELS

ECO#	LET	DESCRIPTION	DATE

DRAWN BY: MEL
DATE: 11/01/11
CHK'D:
SCALE: NONE

DELUX MFG. CO.
KEARNEY, NE

TITLE: SCHEMATIC
FIREYE MicroM FLAME SYSTEM
(USED WITH SCHEMATICS 900-010042 & 900-010044)

USED ON: DP/SL, DPX/SL, 4T, 8T, 12T, 16GT
NEXT ASS'Y:
MATL.
SHEAR SIZE
DRAWING NO. 900-010043

TOLERANCE: DECIMAL ±.010 FRACTION ±1/32 ANGLE ±1° UNLESS OTHERWISE SPECIFIED

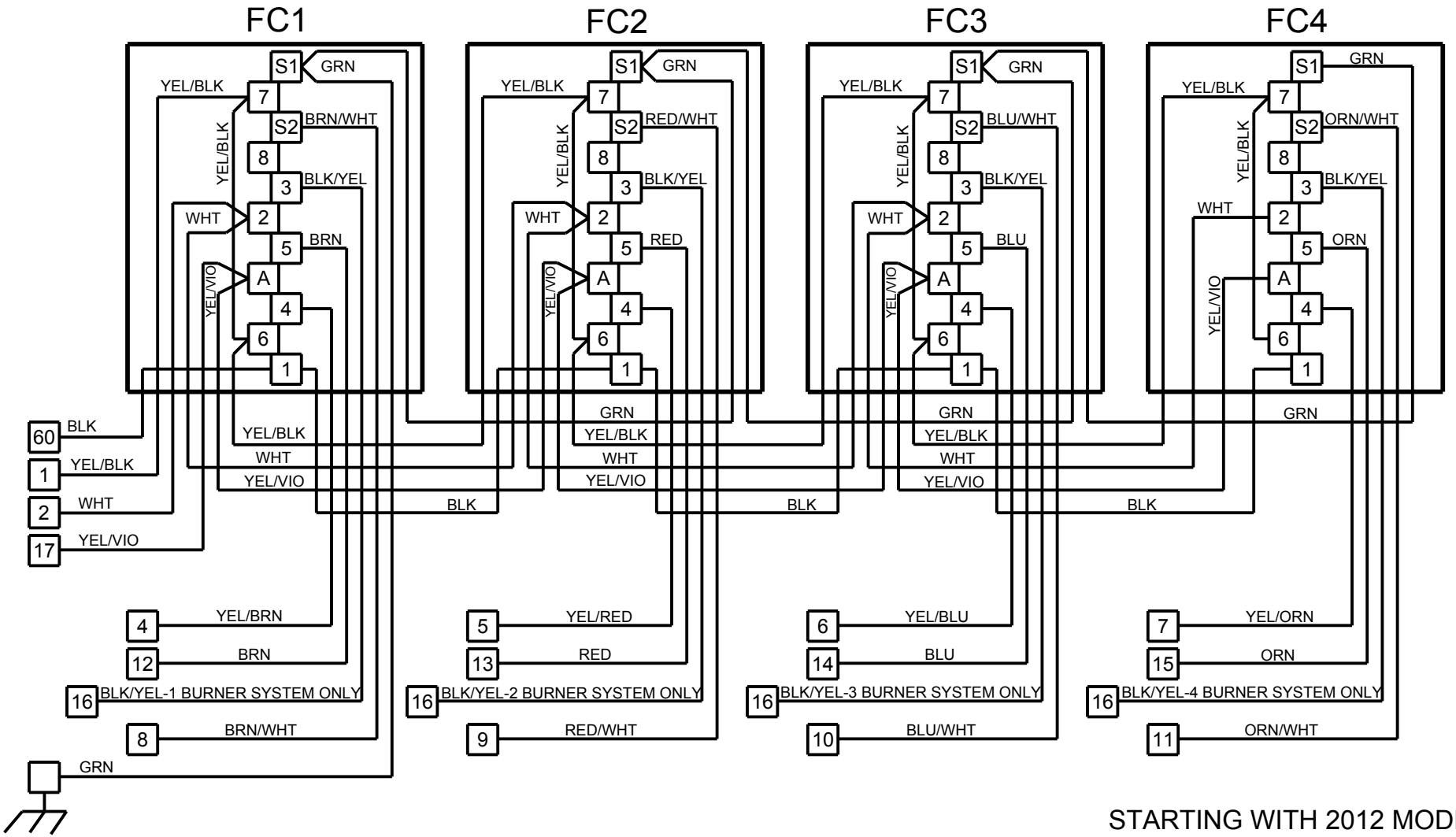

STARTING WITH 2012 MODELS

				DRAWN BY	DELUX MFG. CO.		TITLE:
				MEL	KEARNEY, NE		WIRING DIAGRAM FIREYE SYSTEM BASE MicroM SERIES REF: 900-010043 - SCHEMATIC
				DATE			
				07/17/12			
				CHK'D	USED ON:		
					NEXT ASS'Y:		
				SCALE	MATL.	SHEAR SIZE	DRAWING NO.
ECO#	LET	DESCRIPTION	DATE	NONE			900-010044

TOLERANCE: DECIMAL ±.010 FRACTION ±1/32 ANGLE ±1° UNLESS OTHERWISE SPECIFIED

ITEM	DESCRIPTION
1	QUICK ACTING CUT-OFF
2	PRESSURE RELIEF VALVE
3	STRAINER
4	ELECTRIC SOLENIOD VALVE (LIQUID)
5	PRESSURE RELIEF VALVE
6	INTERNAL VAPORIZER
7	PRESSURE REGULATOR WITH GAUGE
8	MANUAL BALL VALVE
9	ELECTRIC SOLENIOD VALVE (VAPOR)
10	ELECTRIC BUTTERFLY VALVE (TEMP. CONTROL)
11	PRESSURE GAUGE
12	BURNER #1
13	BURNER #2
14	BURNER #3
15	BURNER #4
16	ORIFICE - BURNER #1
17	ORIFICE - BURNER #2
18	ORIFICE - BURNER #3
19	ORIFICE - BURNER #4

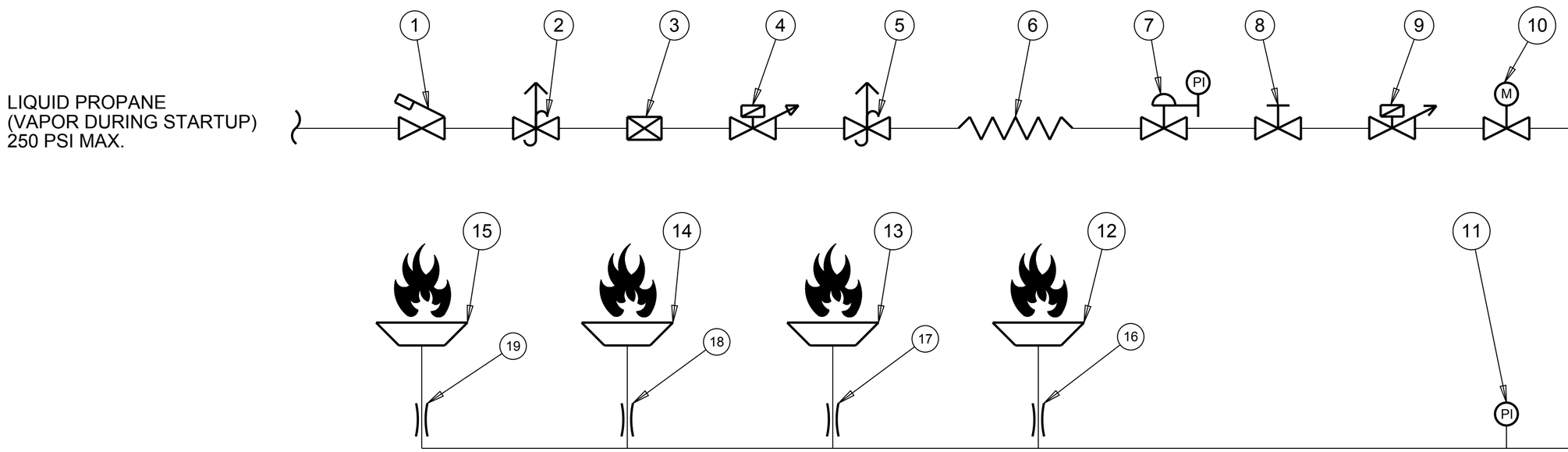

				DRAWN BY	**DELUX MFG. CO.**		TITLE:
				JGW	KEARNEY, NE		PLUMBING SCHEMATIC LIQUID PROPANE - NON-CSA DP/DPSL, DPX/SL, 4T, 8T, 12T
				DATE			
				01/11/10			
				CHK'D	USED ON:		
					NEXT ASS'Y:		
				SCALE	MATL.	SHEAR SIZE	DRAWING NO.
ECO#	LET	DESCRIPTION	DATE				900-009215

TOLERANCE: DECIMAL □ ±.010 FRACTION □ ±1/32 ANGLE □ ±1 UNLESS OTHERWISE SPECIFIED

ITEM	DESCRIPTION
1	MANUAL BALL VALVE
2	PRESSURE GAUGE
3	ELECTRIC SOLENIOD VALVE
4	ELECTRIC BUTTERFLY VALVE (TEMP. CONTROL)
5	PRESSURE GAUGE
6	BURNER #1
7	BURNER #2
8	BURNER #3
9	BURNER #4
10	ORIFICE - BURNER #1
11	ORIFICE - BURNER #2
12	ORIFICE - BURNER #3
13	ORIFICE - BURNER #4

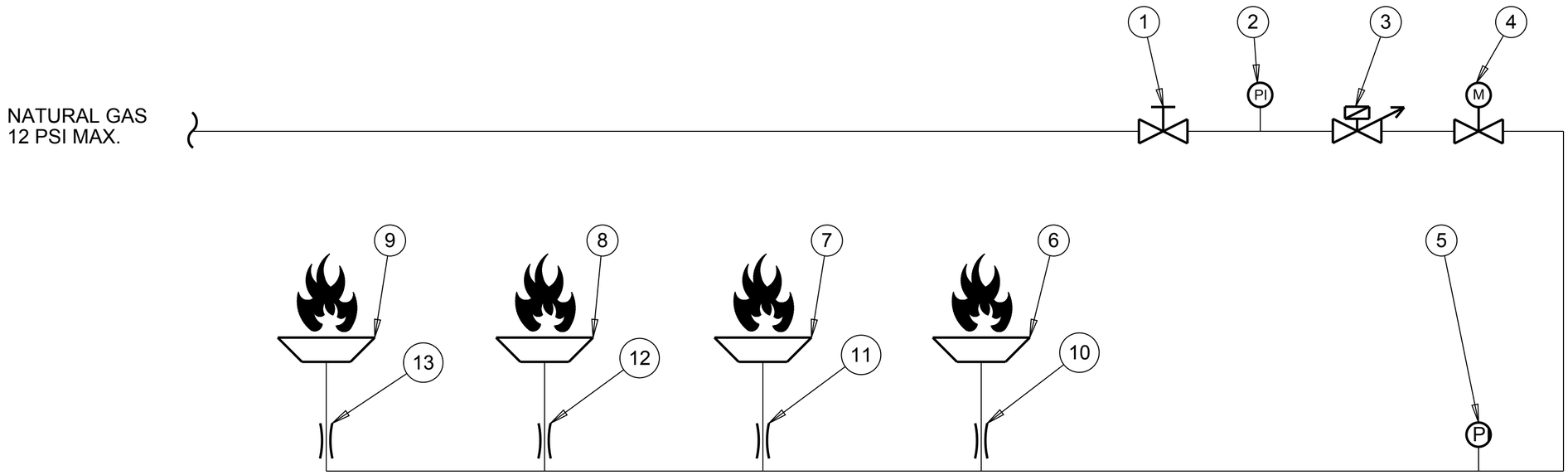

				DRAWN BY JGW	**DELUX MFG. CO.** KEARNEY, NE		TITLE: PLUMBING SCHEMATIC NATURAL GAS - NON-CSA DP/DPSL, DPX/SL, 4T, 8T, 12T
				DATE 01/11/10			
				CHK'D	USED ON:		
					NEXT ASS'Y:		
				SCALE	MATL.	SHEAR SIZE	DRAWING NO. 900-009216
ECO#	LET	DESCRIPTION	DATE				

TOLERANCE: DECIMAL ±.010 FRACTION ±1/32 ANGLE ±1 UNLESS OTHERWISE SPECIFIED

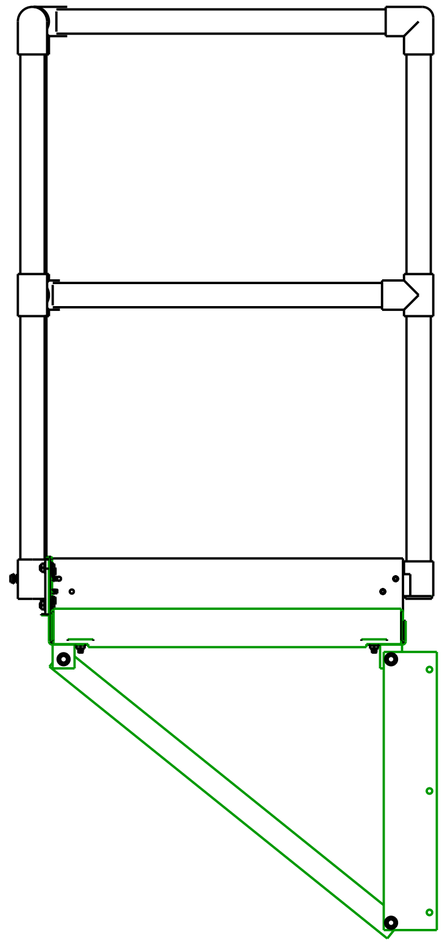

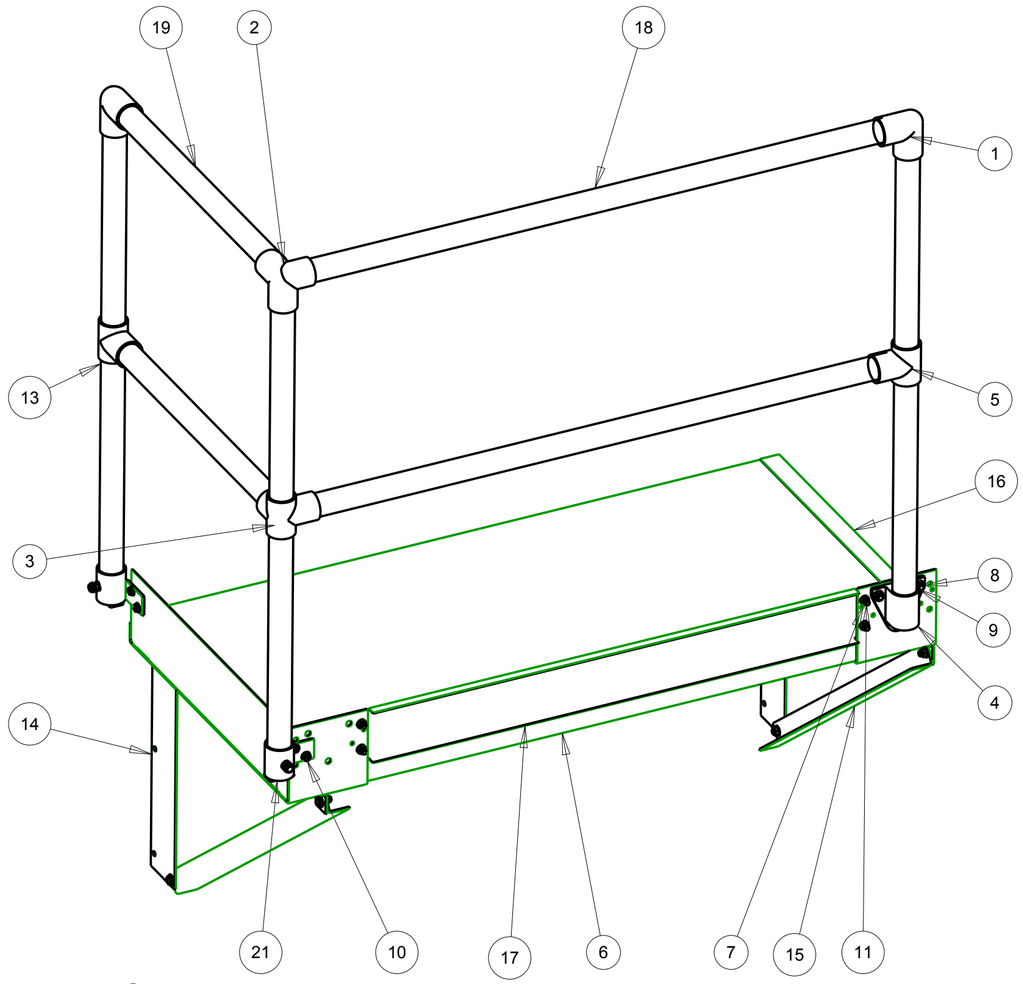

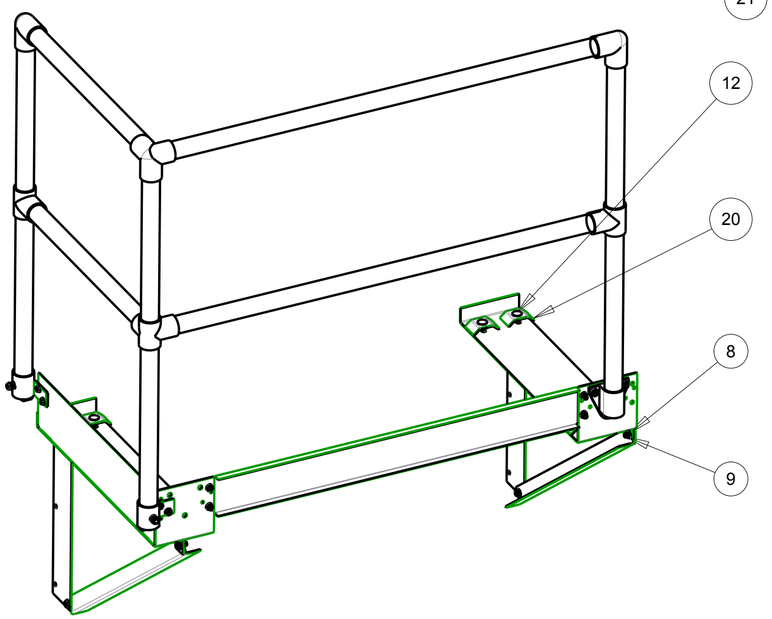

SCALE 0.093
*GRIPSTRUT REMOVED FOR ILLUSTRATION

ITEM	PART NUMBER	QTY	DESCRIPTION
1	034-001397	2	PIPE FITTING - ELL
2	034-001399	1	PIPE FITTING - S/O ELBOW
3	034-001400	1	PIPE FITTING - S/O TEE
4	034-001404	1	PIPE FITTING - BASE
5	034-001782	2	PIPE FITTING - TEE
6	038-001412-48000	1	GRIP STRUT - 2" X 24" X 48"
7	040-001459	4	NUT - WHIZ LOCK - 5/16-18UNC
8	040-001460	17	NUT - WHIZ LOCK - 3/8-16UNC
9	040-002193	9	BOLT - WHIZ LOCK - 3/8-16UNC X 3/4
10	040-002739	4	SCREW - TCS - HEX - 5/16-18UNC X 3/4
11	040-005321	4	BOLT - WHIZ LOCK - 5/16-18UNC X 3/4"
12	040-008665	8	BOLT - CARRIAGE - 3/8-18UNC X 1-1/4
13	100-000122	3	PIPE RAILING - 38"
14	100-003133	2	CATWALK SPRT BRKT - ENDWALL
15	100-007345	2	CATWALK ANGLE BRACE - END CATWALK
16	100-007376	1	END COVER - 24" GRIP STRUT
17	100-008617	1	CATWALK TOE GUARD - END CATWALK - GARNER/PLNM
18	100-008620	2	PIPE RAILING - 45"
19	100-008621	2	PIPE RAILING - 23-1/2"
20	100-008623	8	WALKWAY CLAMP
21	200-002274	2	W.A. - HANDRAILING BRACKET - RIGHT
22	200-008493	1	W.A. - CATWALK SPRT BRKT 24" - END CATWALK - TAB RIGHT
23	200-008626	1	W.A. - CATWALK SPRT BRKT 24" - TOE GUARD - TAB MID

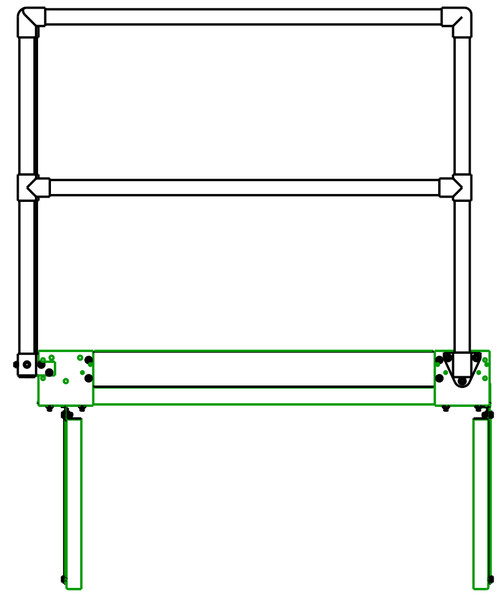

SCALE 0.078

ECO#	LET	DESCRIPTION	DATE
	A	RE-DRAWN	09/04/07

DRAWN BY: JGW
DATE: 09/04/07
CHK'D:
SCALE: .125
MATL.:
SHEAR SIZE:

DELUX MFG. CO.
KEARNEY, NE

USED ON:
NEXT ASS'Y:

TITLE:
ASSEMBLY
CATWALK & RAILINGS

GARNER WALKWAY - DP/DPSL

PLENUM WALKWAY - DPX/DPXSL
DPX4T-8T-12T

DRAWING NO.
400-008618

TOLERANCE: DECIMAL ±010 FRACTION ±1/32 ANGLE ±1° UNLESS OTHERWISE SPECIFIED

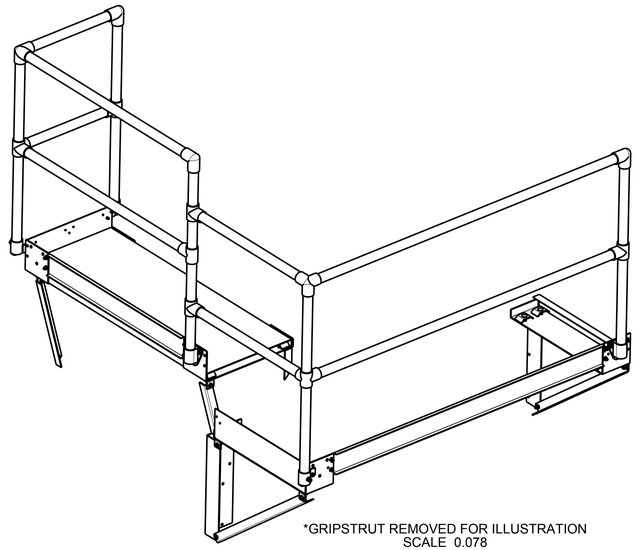

*GRIPSTRUT REMOVED FOR ILLUSTRATION
SCALE 0.078

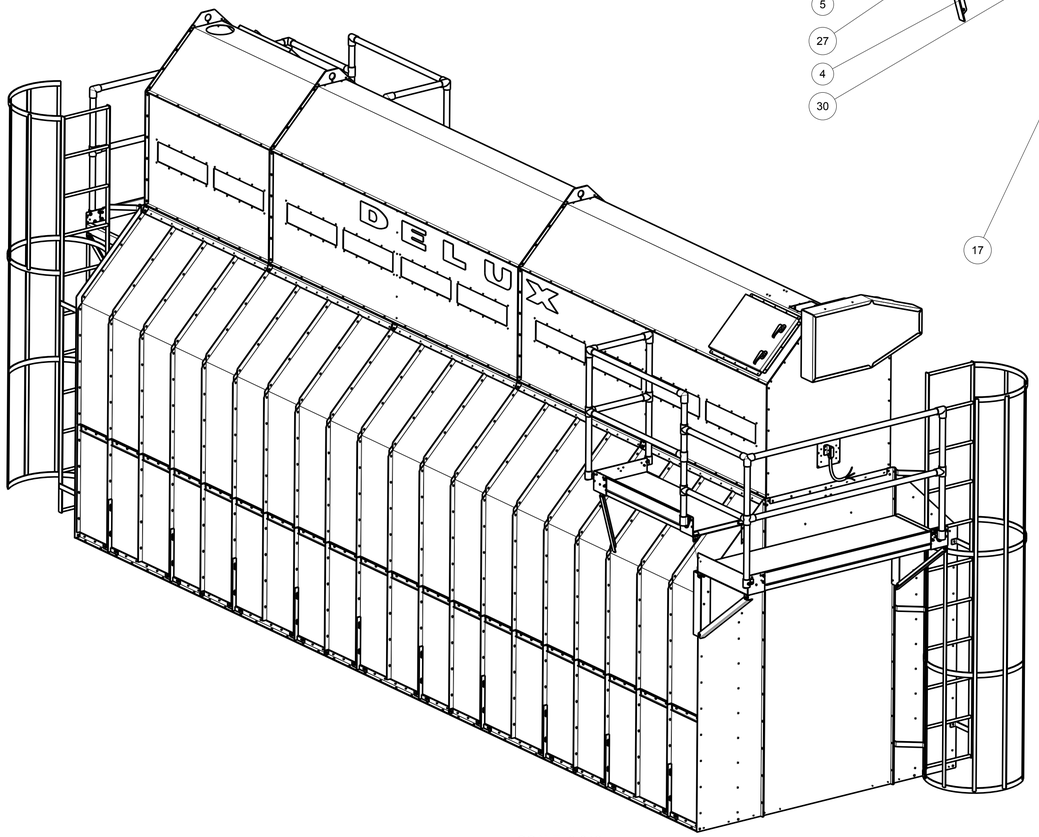

SCALE 0.046

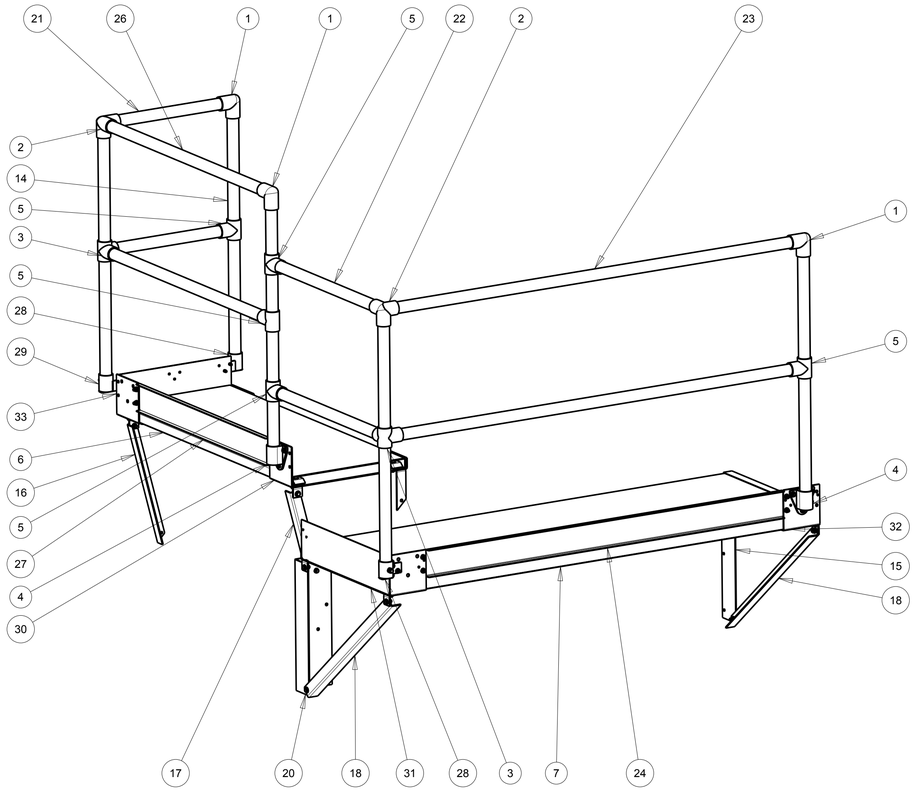

ITEM	PART NUMBER	QTY	DESCRIPTION
1	034-001397	3	PIPE FITTING - ELL
2	034-001399	2	PIPE FITTING - S/O ELBOW
3	034-001400	2	PIPE FITTING - S/O TEE
4	034-001404	2	PIPE FITTING - BASE
5	034-001782	5	PIPE FITTING - TEE
6	038-001411-48000	1	GRIP STRUT - 1-1/2" X 18" X 48"
7	038-001412-71000	1	GRIP STRUT - 2" X 24" X 71"
8	040-001459	9	NUT - WHIZ LOCK - 5/16-18UNC
9	040-001460	30	NUT - WHIZ LOCK - 3/8-16UNC
10	040-002193	14	BOLT - WHIZ LOCK - 3/8-16UNC X 3/4
11	040-002739	6	SCREW - TCS - HEX - 5/16-18UNC X 3/4
12	040-005321	9	BOLT - WHIZ LOCK - 5/16-18UNC X 3/4"
13	040-008665	16	BOLT - CARRIAGE - 3/8-18UNC X 1-1/4
14	100-000122	5	PIPE RAILING - 38"
15	100-003133	1	CATWALK SPRT BRKT - ENDWALL
16	100-005281	1	CATWALK ANGLE BRACE 45 ° - LEFT
17	100-005282	1	CATWALK ANGLE BRACE 45 ° - RIGHT
18	100-007345	2	CATWALK ANGLE BRACE - END CATWALK
19	100-007376	1	END COVER - 24" GRIP STRUT
20	100-008478	1	CATWALK SPRT BRKT - END CATWALK EXT.
21	100-008479	2	PIPE RAILING - 18-1/2"
22	100-008480	2	PIPE RAILING - 27-1/2"
23	100-008486	2	PIPE RAILING - 67"
24	100-008503	1	CATWALK TOE GUARD - END CATWALK EXT.
25	100-008623	16	WALKWAY CLAMP
26	100-008629	2	PIPE RAILING - 42-1/2"
27	100-008630	1	CATWALK TOE GUARD - GARNER PLTFRM
28	200-002274	2	W.A. - HANDRAILING BRACKET - RIGHT
29	200-007387	1	W.A. - HANDRAILING BRACKET - LEFT
30	200-008491	1	W.A. - CATWALK SPRT BRKT 18" - 45 ° - TAB RGHT
31	200-008492	1	W.A. - CATWALK SPRT BRKT 24" - END CTWLK - TOE GRD - TAB LEFT
32	200-008493	1	W.A. - CATWALK SPRT BRKT 24" - END CATWALK - TAB RIGHT
33	200-008622	1	W.A. - CATWALK SPRT BRKT 18" - 45 ° - TOE GRD - TAB MID

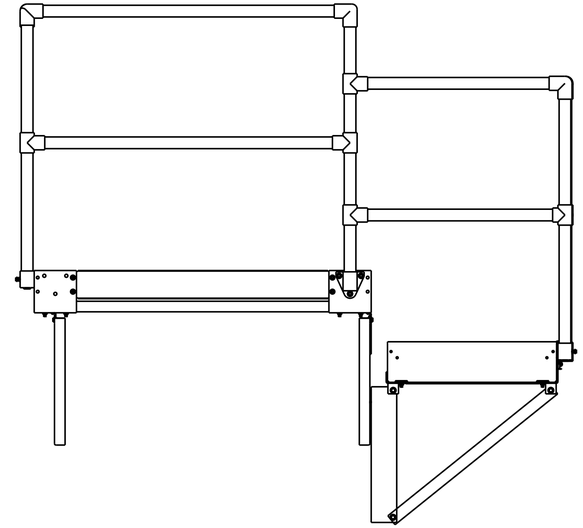

				DRAWN BY	**DELUX MFG. CO.**		TITLE:
				JGW	KEARNEY, NE		ASSEMBLY ILLUSTRATION DRAWING GARNER WALKWAY DPX/DPXSL, DPX4T/8T/12T
				DATE			
				09/05/07			
				CHK'D	USED ON:		
					NEXT ASS'Y:		
	A	REDRAWN	09/05/07	SCALE	MATL.	SHEAR SIZE	DRAWING NO.
ECO#	LET	DESCRIPTION	DATE	.093			400-008624

TOLERANCE: DECIMAL ±.010 FRACTION ±1/32 ANGLE ±1° UNLESS OTHERWISE SPECIFIED

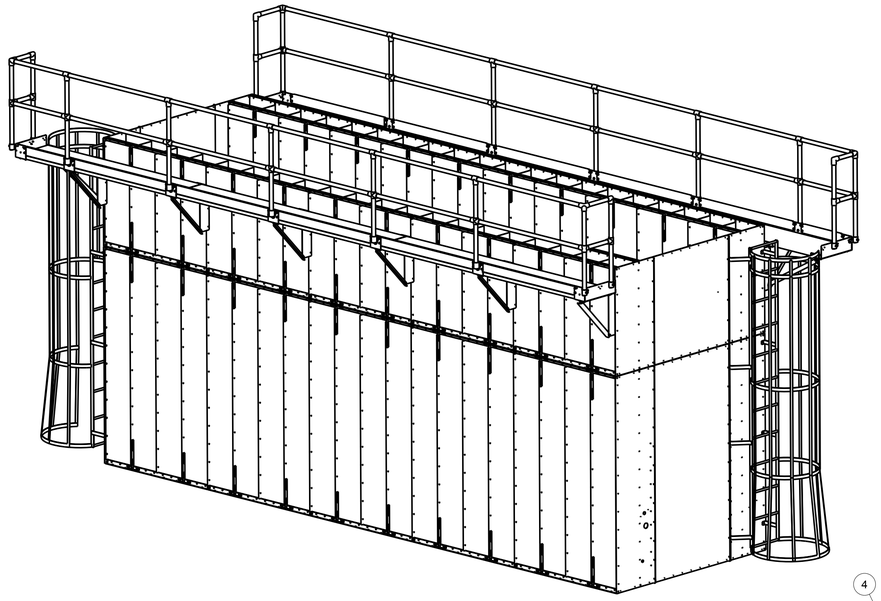

SCALE 0.031
REFERENCE VIEW FOR
DPX12T (SHOWN), DPX8T & DPX4T

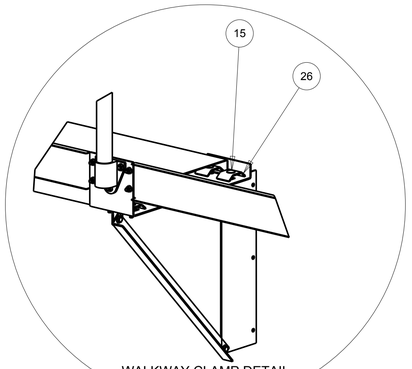

WALKWAY CLAMP DETAIL
SCALE 0.125

ITEM	PART NUMBER	QTY (ONE SIDE ONLY)						DESCRIPTION
		10FT	15FT	20FT	25FT	30FT	40FT	
1	034-001397	2	2	2	2	2	2	PIPE FITTING - ELL
2	034-001398	2	3	4	5	6	8	PIPE FITTING - CROSS
3	034-001399	2	2	2	2	2	2	PIPE FITTING - S/O ELBOW
4	034-001400	2	2	2	2	2	2	PIPE FITTING - S/O TEE
5	034-001404	2	3	4	5	6	8	PIPE FITTING - BASE
6	034-001782	4	5	6	7	8	10	PIPE FITTING - TEE
7	038-001411-120000	-	1	1	1	2	3	GRIP STRUT - 18" X 1-1/2" X 120"
8	038-001411-60000	1	-	1	-	1	1	GRIP STRUT - 18" X 1-1/2" X 60"
9	038-001411-90000	1	1	1		1	1	GRIP STRUT - 18" X 1-1/2" X 90"
10	040-001459	12	16	20	24	28	36	NUT - WHIZ LOCK - 5/16-18UNC
11	040-001460	32	42	52	62	72	92	NUT - WHIZ LOCK - 3/8-16UNC
12	040-002193	14	20	26	34	40	52	BOLT - WHIZ LOCK - 3/8-16UNC X 3/4
13	040-002739	8	8	8	8	8	8	SCREW - TCS - HEX - 5/16-18UNC X 3/4
14	040-005321	12	16	20	24	28	36	BOLT - WHIZ LOCK - 5/16-18UNC X 3/4"
15	040-008665	16	20	24	28	32	40	BOLT - CARRIAGE - 3/8-18UNC X 1-1/4
16	100-000122	6	7	8	9	10	12	PIPE RAILING - 38"
17	100-002215	3	4	5	6	7	9	SUPPORT ANGLE - WALKWAY
18	100-006055	3	4	5	6	7	9	CATWALK SUPPORT BRACKET
19	100-006350	2	2	2	2	2	2	PIPE RAILING - 62-1/4"
20	100-006357	2	2	2	2	2	2	PIPE RAILING - 11"
21	100-006359	2	2	2	2	2	2	PIPE RAILING - 30"
22	100-006360	1	2	3	4	5	7	PIPE RAILING - 58"
23	100-006363	1	1	1	1	1	1	WALKWAY SUPPORT - FRONT/REAR
24	100-008485	1	2	3	4	5	7	PIPE RAILING - 59-1/2"
25	100-008496	1	2	3	4	5	7	WALKWAY TOE GUARD - INTERMEDIATE
26	100-008623	16	20	24	28	32	40	WALKWAY CLAMP
27	100-008635	1	1	1	1	1	1	WALKWAY TOE GUARD - 30" EXT. TO LADDER
28	100-008636	1	1	1	1	1	1	WALKWAY TOE GUARD - LADDER END LONG
29	100-008701	2	2	2	2	2	2	PIPE RAILING - 14"
30	200-002274	3	3	3	3	3	3	W.A. - HANDRAILING BRACKET - RIGHT
31	200-007387	1	1	1	1	1	1	W.A. - HANDRAILING BRACKET - LEFT
32	200-008637	1	1	1	1	1	1	W.A. - WLKWY BRKT AT LADDER EXTENSION
33	200-008638	1	1	1	1	1	1	W.A. - WLKWY BRKT - END BRKT - SIDE WLKWY
34	200-008639	2	3	4	1	6	8	W.A. - WLKWY BRKT - INT - SIDE WLKWY - TAB MID

**NOTES:
1) ITEMS 16-17, 19-24 & 29 ARE SHIPPED WHEN FACTORY INSTALLED
2) QTY'S SHOWN ARE FOR ONE SIDE OF THE DRYER ONLY.
3) ILLUSTRATION DRAWING SHOWN IS A 25FT DRYER.
4) PLANK LENGTHS AS NEEDED PER DRYER LENGTH.
- 60" (8) ALWAYS GOES TO LADDER END
- 90" (9) ALWAYS GOES TO LADDER END
- 120" (7) IS NOMINAL LENGTH. RAW MATERIAL MAY BE LONGER AND CAN BE USED AS SUCH.

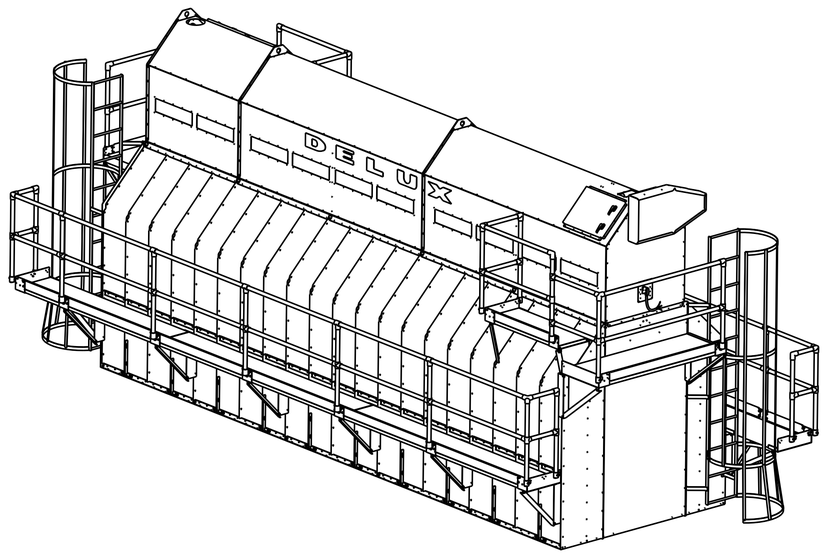

SCALE 0.031
REFERENCE VIEW FOR
DPX & DPXSL ROOF

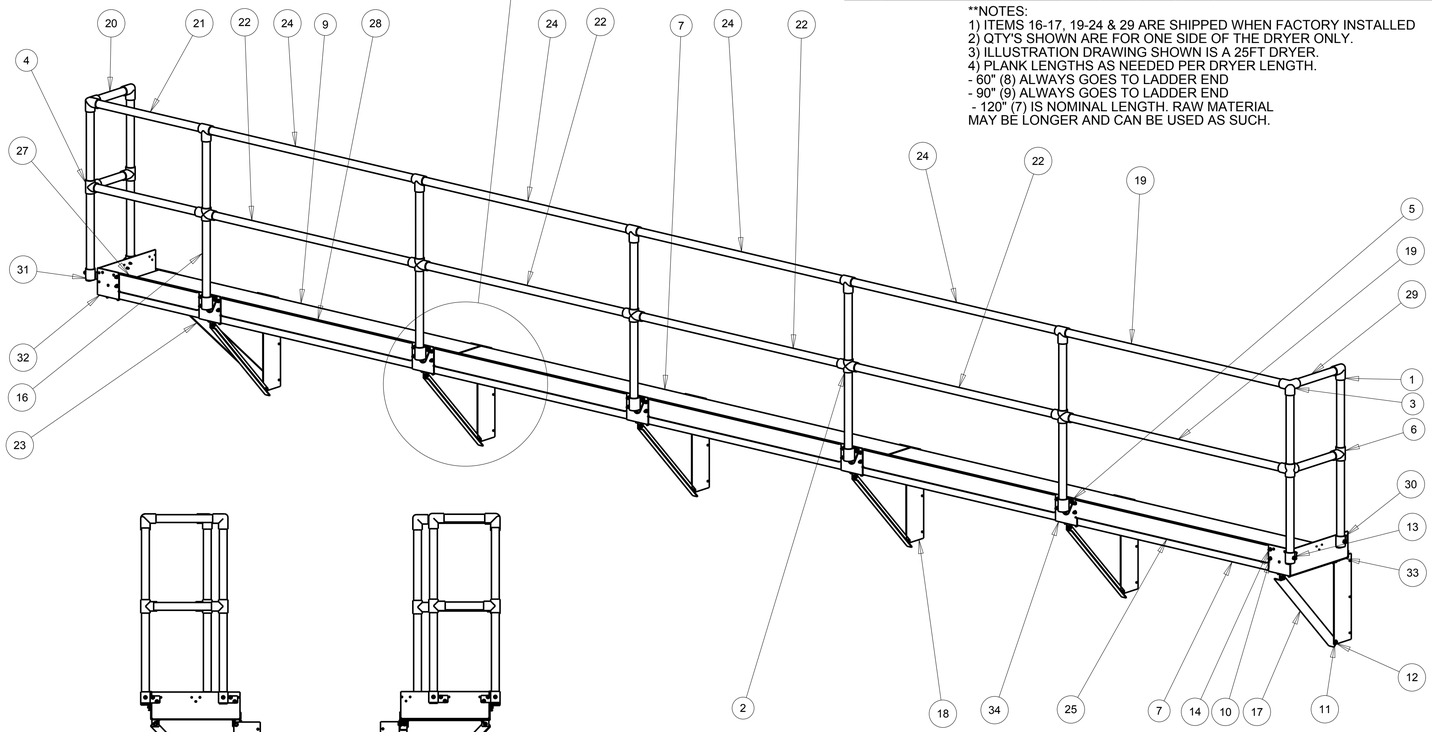

NON-LADDER END
VIEW

LADDER END
VIEW

				DRAWN BY	**DELUX MFG. CO.**		TITLE:
				JGW	KEARNEY, NE		ILLUSTRATION DRAWING SIDE WALKWAY DPX/SL, 4T, 8T, 12T
				DATE			
				08/09/06			
				CHK'D	USED ON:		
	B	ELIMINATE 62-1/4 PLANK (28)	04/27/07		NEXT ASS'Y:		
	A	RIGHT BRKT WAS LEFT	02/21/07	SCALE	MATL.	SHEAR SIZE	DRAWING NO.
ECO#	LET	DESCRIPTION	DATE	.063			900-008640

TOLERANCE: DECIMAL ±.010 FRACTION ±1/32 ANGLE ±1° UNLESS OTHERWISE SPECIFIED

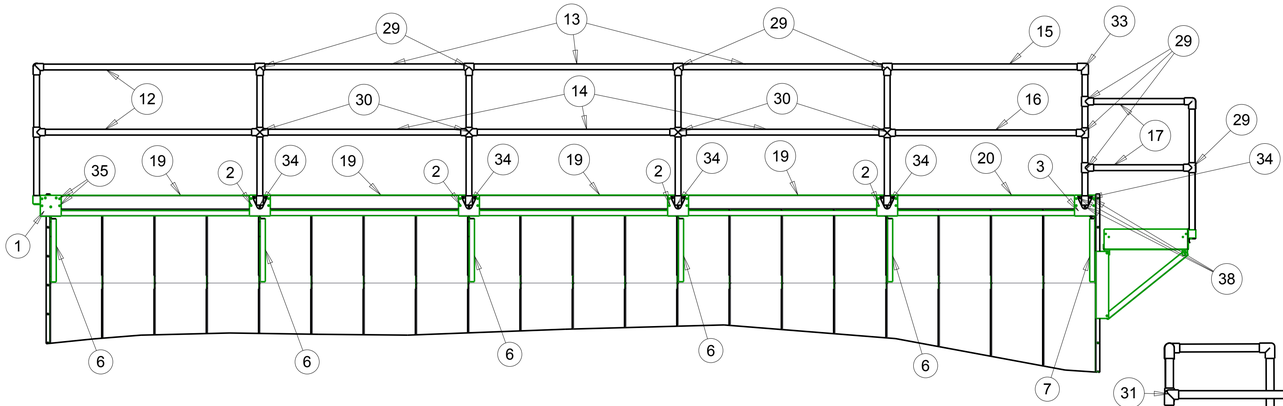

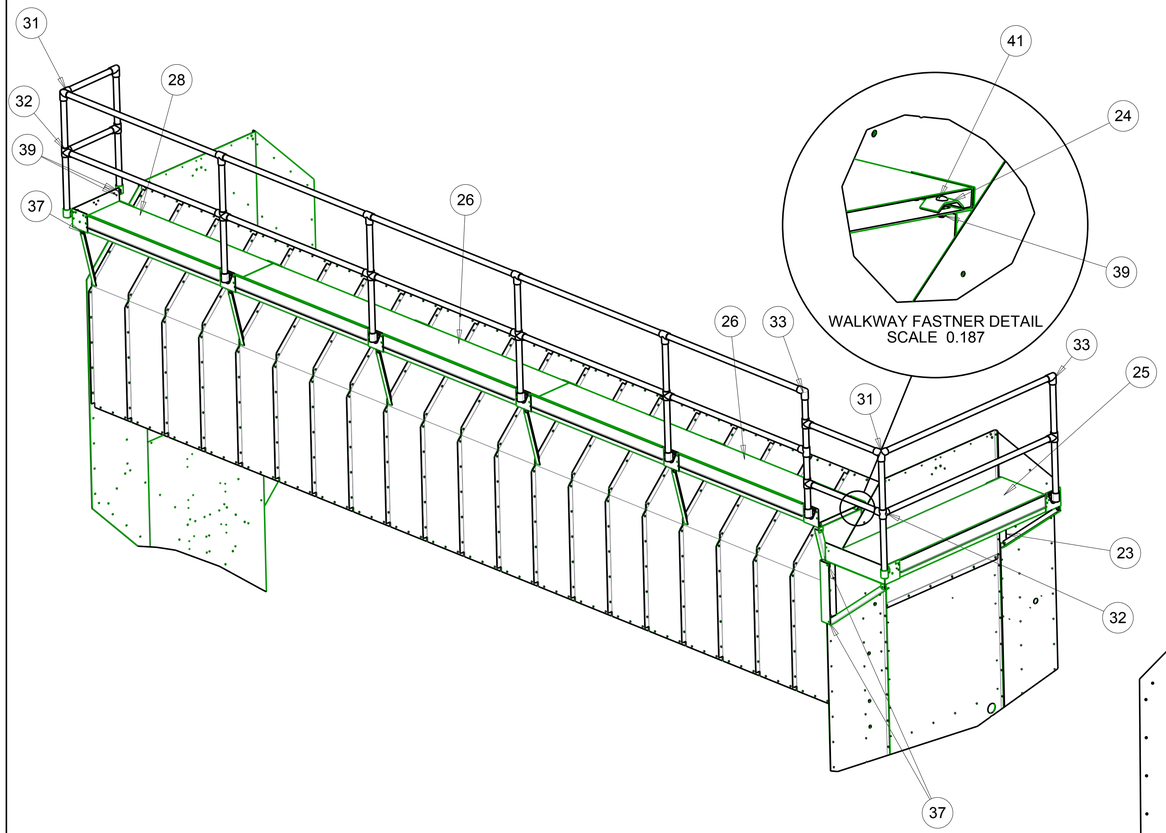

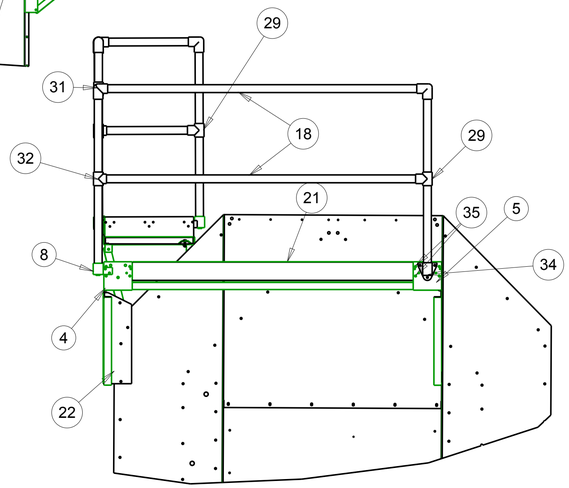

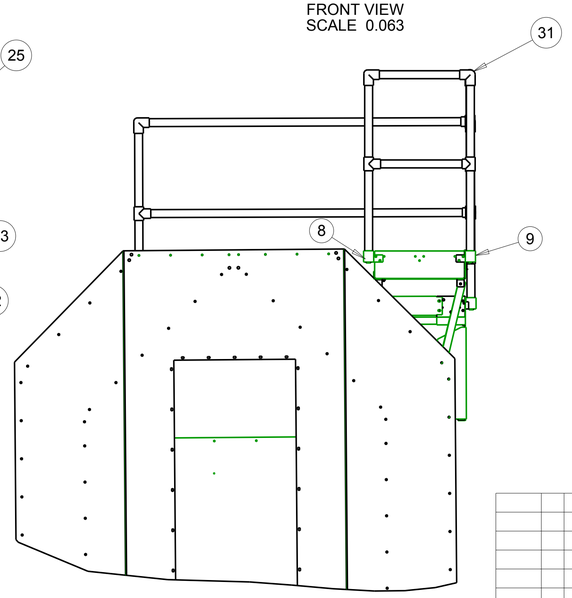

ITEM	PART NUMBER	QTY 10 FT	15FT	20FT	25FT	30FT	40FT	DESCRIPTION
1	200-008622	1	1	1	1	1	1	CATWALK BRACKET 18" - 45º TOE GRD - TAB MID
2	200-008490	1	2	3	4	5	7	CATWALK BRACKET 18" - 45º INTERMEDIATE - TAB MID
3	200-008491	1	1	1	1	1	1	CATWALK BRACKET 18" - 45º RIGHT - TAB RIGHT
4	200-008492	1	1	1	1	1	1	CATWALK BRACKET 24" - END CATWALK - TOE GRD - TAB LFT
5	200-008493	1	1	1	1	1	1	CATWALK BRACKET 24" - END CATWALK - TAB RIGHT
6*	100-005281	2	3	4	5	6	8	CATWALK ANGLE BRACE 45º LEFT
7*	100-005282	1	1	1	1	1	1	CATWALK ANGLE BRACE 45º- RIGHT
8	200-007387	2	2	2	2	2	2	PIPE CUP - LEFT
9	200-002274	1	1	1	1	1	1	PIPE CUP - RIGHT
10	100-008479	2	2	2	2	2	2	PIPE RAILING - 18-1/2"
11	100-000122	6	7	8	9	10	12	PIPE RAILING - 38"
12*	100-006350	2	2	2	2	2	2	PIPE RAILING - 62-1/4"
13*	100-008485	-	1	2	3	4	6	PIPE RAILING - 59-1/2"
14*	100-006360	-	1	2	3	4	6	PIPE RAILING - 58"
15*	100-008482	1	1	1	1	1	1	PIPE RAILING - 55-1/2"
16*	100-008481	1	1	1	1	1	1	PIPE RAILING - 54"
17*	100-008480	2	2	2	2	2	2	PIPE RAILING - 27-1/2"
18*	100-008486	2	2	2	2	2	2	PIPE RAILING - 67"
19	100-008496	1	2	3	4	5	7	CATWALK TOE GUARD - INTERMEDIATE
20	100-008504	1	1	1	1	1	1	CATWALK TOE GUARD - RIGHT - LADDER END
21	100-008503	1	1	1	1	1	1	CATWALK TO GUARD - END CATWALK
22	100-008478	1	1	1	1	1	1	CATWALK SUPPORT BRACKET - END CATWALK - LEFT
23	100-003133	1	1	1	1	1	1	CATWALK SUPPORT BRACKET - END WALL
24	100-008623	20	24	28	32	36	44	WALKWAY CLAMP
25	038-001412	1	1	1	1	1	1	GRIP STRUT - 2" X 24" X 71"
26	038-001411	-	1	1	2	2	3	GRIP STRUT - 1-1/2" X 18" X 120"
27	038-001411	1	-	1	-	1	1	GRIP STRUT - 1-1/2" X 18" X 60"
28	038-001411	1	1	1	1	1	1	GRIP STRUT - 1-1/2" X 18" X 62-1/4"
29*	034-001782	6	7	8	9	10	12	PIPE FITTING - TEE
30*	034-001398	1	2	3	4	5	7	PIPE FITTING - CROSS
31*	034-001399	2	2	2	2	2	2	PIPE FITTING - S/O ELL
32*	034-001400	2	2	2	2	2	2	PIPE FITTING - S/O TEE
33*	034-001397	3	3	3	3	3	3	PIPE FITTING - ELL
34	034-001404	3	4	5	6	7	9	PIPE FITTING - BASE
35	040-001434	12	16	20	24	28	36	WHIZ BOLT - 5/16"-18UNC X 3/4"
36	040-001459	12	16	20	24	28	36	WHIZ NUT - 5/16"-18UNC
37	040-002193	15	18	21	24	27	33	WHIZ BOLT - 3/8"-16UNC X 3/4"
38	040-001483	9	12	15	18	21	24	WHIZ BOLT - 3/8"-16UNC X 1"
39	040-001460	44	54	64	74	84	101	WHIZ NUT - 3/8"-16UNC
40	040-002739	6	6	6	6	6	6	SCREW - TCS - 5/16"-18UNC X 3/4"
41	040-008665	20	24	28	32	36	44	BOLT - CARRIAGE 3/8"-16UNC X 1-1/4"

* INDICATES ITEMS THAT ARE SHIPPED WHEN SIDE WALKWAY IS FACTORY INSTALLED

NOTE:

1. QTY'S SHOWN ARE FOR ONE SIDE OF THE DRYER ONLY.
2. ILLUSTRATION DRAWING SHOWN IS A 25FT DRYER.
3. GARNER AND OTHER FEATURES HAVE BEEN LEFT OFF DRAWING FOR ILLUSTRATION PURPOSES.

ECO#	LET	DESCRIPTION	DATE
	A	BOM REVISED	06/14/07

DRAWN BY: JGW
DATE: 0906/07
CHK'D:
SCALE: .046
MATL.:
SHEAR SIZE:

DELUX MFG. CO.
KEARNEY, NE

USED ON:
NEXT ASS'Y:

TITLE: ILLUSTRATION DRAWING WALKWAY ON 45 DEGREE SLOPE DP/SL, DPX/SL, 4T, 8T, 12T

DRAWING NO. 900-008667

TOLERANCE: DECIMAL ±.010 FRACTION ±1/32 ANGLE ±1° UNLESS OTHERWISE SPECIFIED

100-006356
SPLICE PLATE-INTERMEDIATE
(WHEN PLENUM DOOR SPLITS SECTIONS)

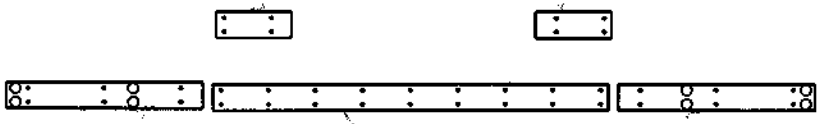

100-005262
SPLICE PLATE-INTERMEDIATE

100-005261
SPLICE PLATES-LEFT AND RIGHT

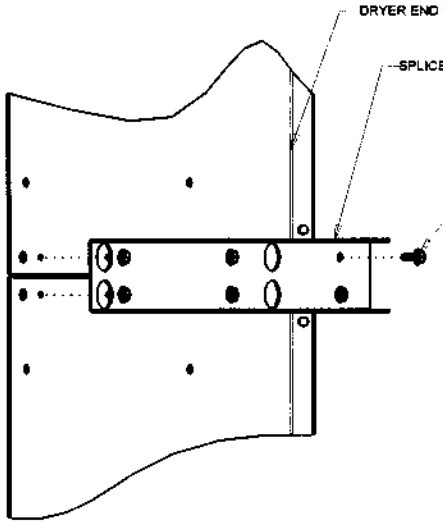

END WALL / SPLICE PLATE
SCALE 0.250

040-002739
THREAD CUTTING SCREW, 5/16-18UNC X 3/4"

SECTION SPLICES TO END WALLS;
GARNER END WALLS TO DRYER END WALLS

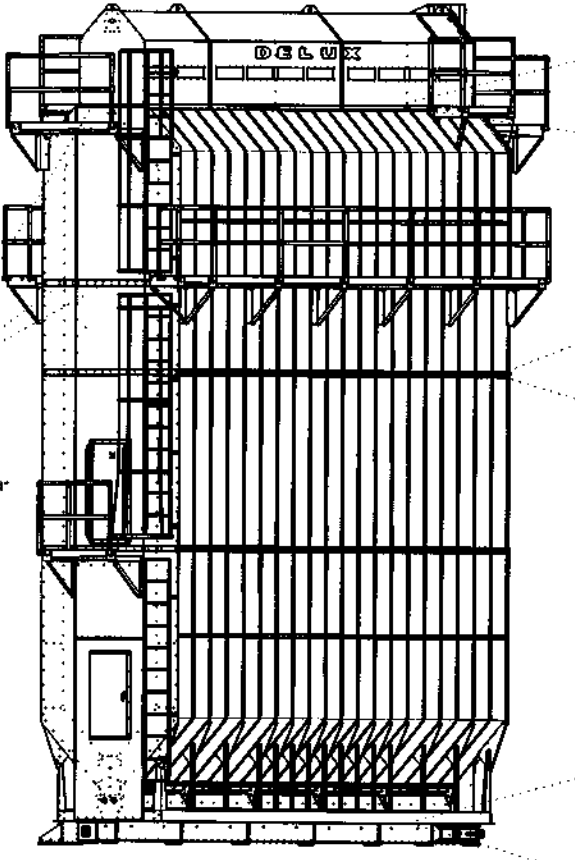

040-005321
WHIZ LOCK BOLT, 5/16-18UNC X 3/4"

GARNER TO DRYER TOP

040-001459
WHIZ LOCK NUT, 5/16-18UNC

040-001483
WHIZ LOCK BOLT, 3/8-16UNC X 1"

SECTION TO SECTION SIDE ANGLES

040-001460
WHIZ LOCK NUT, 3/8-16UNC

040-005321
WHIZ LOCK BOLT, 5/16-18UNC X 3/4"

DRAG CONVEYOR DISCHARGE
TO DRYER TRANSITION

040-001459
WHIZ LOCK NUT, 5/16-18UNC

ECO#	LET	DESCRIPTION	DATE
	C	UPDATE FOR EXPANDED MODELS	07/25/12
	B	REDRAWN	12/28/04

DRAWN BY: MEL
DATE: 12/28/04
CHK'D:
USED ON:
NEXT ASS'Y:
MATL.
SHEAR SIZE
SCALE: .020 ("C" SIZE)

DELUX MFG. CO.
KEARNEY, NE

TITLE
ILLUSTRATION
ERECTION
DPX/DPXSL; 4T; 8T; 12T; 16GT

DRAWING NO. 900-005526

TOLERANCE: DECIMAL ±.010 FRACTION ±1/32 ANGLE ±1° UNLESS OTHERWISE SPECIFIED

GENERAL OPERATOR MAINTENANCE

SAFETY CODE---------USE CAUTION IN OPERATING THIS EQUIPMENT.

THE DESIGN AND MANUFACTURE OF THIS DRYER IS DIRECTED TOWARD OPERATOR SAFETY.

USE EXTREME CAUTION IN WORKING AROUND HIGH SPEED FANS, GAS FIRED BURNERS, DISCHARGE AUGERS, AND AUXILIARY AUGERS, WHICH MAY START WITHOUT WARNING WHEN THE DRYER IS OPERATING ON AUTOMATIC CONTROLS.

CONTINUED SAFE, DEPENDABLE OPERATION OF AUTOMATIC EQUIPMENT DEPENDS TO A GREAT DEGREE UPON THE OWNER. FOR A SAFE DEPENDABLE DRYING SYSTEM, FOLLOW THE RECOMMENDATIONS WITHIN THE MANUAL AND MAKE IT A PRACTICE TO REGULARLY INSPECT THE OPERATION OF THE UNIT FOR ANY DEVELOPING PROBLEMS OR UNSAFE CONDITIONS.

KEEP A CLEAN DRYER

DO NOT ALLOW FINE MATERIAL TO ACCUMULATE ON THE PLENUM FLOOR OR A TRASH FIRE CAN RESULT

CHECKING THE DRYER EVERY 24 HOURS AND CLEANING WILL HELP PREVENT PROBLEMS. THE DRYER SHOULD NOT BE LEFT UNATTENDED FOR EXTENDED PERIODS OF TIME.

SAFETY FIRST!

USE ONLY APPROVED LADDERS AND WALKWAYS TO GAIN ACCESS TO THE DRYER.

DISCONNECT AND LOCKOUT ALL ENERGY SOURCES TO THE DRYER BEFORE REPAIR OR MAINTENANCE IS PERFORMED.

BE SURE ALL GUARDS AND SHIELDS ARE IN PLACE BEFORE OPERATING THE DRYER.

PREPARING DRYER FOR OPERATION

CHECK ALL SAFETY CONTROLS FOR PROPER OPERATION.

CHECK FOR WORN OR BROKEN PARTS THAT NEED TO BE REPLACED.

LUBRICATE PER INSTRUCTION LITERATURE LOCATED IN SECTION 14.

OPEN AIR INTAKES DOORS.

CHECK BELTS FOR WEAR AND TENSION.

CHECK CHAIN TENSION AND SPROCKET ALIGNMENT.

RUN FANS AND DISCHARGE SYSTEM TO ASSURE PROPER FUNCTION.

CLEAN FUEL STRAINER-DRAIN FUEL LINES.

DURING SEASON

INSPECT PLENUM AND COOLING CHAMBERS DAILY. CLEAN OUT ANY ACCUMULATION OF DIRT, CHAFF, FINES, ETC.

CHECK FEEDROLLS FOR PROPER GRAIN FLOW.

CHECK CHAIN AND BELT ALIGNMENT DAILY.

INSPECT EXTERIOR SCREENS FOR PLUGGING--CLEAN FOR EFFECTIVE DRYING.

POST SEASON SERVICE

TURN OFF ALL FUEL AND POWER TO THE DRYER.

CLEAN OUT PLENUM AND COOLING CHAMBERS, GRAIN COLUMNS AND AUGERS.

CLEAN EXTERIOR OF DRYER.

LEAVE AUGER SLIDE GATES OPEN FOR DRAINAGE.

CLEAN FUEL STRAINER-DRAIN FUEL LINES.

LUBRICATE PER INSTRUCTIONS - SECTION 14.

APPLY PROTECTIVE COATING TO CHAIN AND SPROCKETS.

INSPECT FOR WORN/DAMAGED PARTS THAT SHOULD BE REPLACED.

KEEP ALL ACCESS DOORS CLOSED.

GENERAL LUBRICATION

1. GEAR DRIVES

   A. LUBRICATION LEVELS TO BE CHECKED ON INITIAL STARTUP.
   B. LUBRICATE PER INSTRUCTION PLATE ON GEAR HEAD.

2. AUGER BEARINGS

   A. BEARINGS USED ARE OF THE PERMANENTLY LUBRICATED TYPE.

3. AUGER HANGER BEARINGS

   A. BEARINGS USED ARE OF THE PERMANENTLY LUBRICATED TYPE.

4. ROLLER CHAIN

   A. SPRAY WITH RUST PREVENTATIVE LUBRICANT AT THE END OF EACH SEASON.

5. FAN MOTOR

   A. FOLLOW MANUFACTURER'S INSTRUCTIONS.

DELUX

Continuous Flow GRAIN DRYERS

REPLACEMENT PARTS

- DP & DPSL SERIES
- DPX & DPXSL SERIES
- DPX4T SERIES
- DPX8T SERIES
- DPX12T SERIES
- DPX16GT SERIES

MODEL NO: _____ LENGTH: _____ FT SERIAL NO: _____

SPECIFICATIONS
DP/DPSL/DPX/DPXSL/DPX4T/DPX8T/DPX12T/DPX16GT

SCHEMATIC: 900-010712 DP-SL/DPX-SL/DPX4-8-12T-16GT 2014(Honeywell MOD. MOTOR)
SCHEMATIC: 900-010713 W/MOISTURE-LINK 2014 (Honeywell MOD. MOTOR)

FUEL: [ ] NG - NATURAL GAS [ ] LP - LIQUID PROPANE

VOLTAGE: [ ]230V-1P [ ]208V-3P [ ]240V-3P [ ]380V-3P(50HZ)[ ]480V-3P [ ]575V-3P

PHASE CONVERTER: [ ]YES [ ]NO CONTROL BOX DOOR LOCKS: AUSTIN - KEY #BP112

CONTROL CIRCUIT

PART DESCRIPTION - INFORMATION	DELUX PART NUMBER
DISTRIBUTION BLOCK: 2 POLE 350 MCM	005-004765
DISTRIBUTION BLOCK: 3 POLE 350 MCM	005-003090
DISTRIBUTION BLOCK: 3 POLE 600 MCM	005-005724
DISTRIBUTION BLOCK: 3 POLE 500 MCM X 2	005-006018
STEP DOWN TRANSFORMER: GE - 1.5 KVA - 380V	008-006351
STEP DOWN TRANSFORMER: GE - 1.5 KVA - 480V	008-001928
STEP DOWN TRANSFORMER: GE - 1.5 KVA - 575V	008-007420
FUSE BLOCK: 2P – 600V – 30A	005-000683
FUSE: STEP DOWN TRANSFORMER: FRS 7 - 380V & 480V	000-000553
FUSE: STEP DOWN TRANSFORMER: FRS 5 - 575V	000-001862
CONTROL CIRCUIT BREAKER	015-010136
MAIN POWER LIGHT: NEON - CLEAR	019-009259
POWER SWITCH: TOGGLE - MOM-ON OFF	010-005474
HOUR METER (LOWER PANEL): HOBBS - 20001-18	016-006717
POWER RELAY & HIGH LIMIT/OVERLOAD RELAY: 8 PIN-DPDT–120V	007-000725
RELAY SOCKET: 8 PIN 120V	007-008938
SAFETY CIRCUIT PROVEN LIGHT: NEON – WHITE	019-009260

FAN CONTROL CIRCUIT

FAN SWITCH: TOGGLE - MOM-ON	010-005681
FAN PROVEN LIGHT(S): NEON - CLEAR	019-009259
FAN TIMER(S): (8) PIN - DPDT - 120V - 0 TO 60 SEC.	007-009166
RELAY SOCKET: 8 PIN 120V - FAN TIMER	007-008938
FAN SAIL SENSOR ASS'Y - SENSOR AND WIDE ALUM. PADDLE ASS'Y	400-009148
FAN SAIL SENSOR ASS'Y - SENSOR AND SOLID PADDLE ASS'Y	400-007230
FAN SAIL SENSOR ASS'Y - SENSOR AND PERF PADDLE ASS'Y	400-008700
FAN SAIL SENSOR WIDE ALUM. PADDLE W/ ARM ASS'Y:	400-009147
FAN SAIL SENSOR SOLID PADDLE W/ ARM ASS'Y:	400-007229
FAN SAIL SENSOR PERFORATED PADDLE W/ ASS'Y:	400-008699

FAN SAIL SENSOR(S): HONEYWELL - S437A 1009	009-005213
FAN SAIL SENSOR WIDE ALUM. PADDLE:	100-009039
FAN SAIL SENSOR SOLID PADDLE:	100-007228
FAN SAIL SENSOR PERFORATED PADDLE:	100-008698
FAN VACUUM SWITCH: BEC R72-C1-ID-192	009-003435
TUBE ASS'Y.- AIR SENSOR – COPPER W/MESH COVER	400-006729
ELBOW 90 DEG 1/4" TO 1/8" – BRASS	021-001137
FAN SENSOR RELAY: SURFACE MOUNT - SPST - 120V - 10 SEC.	007-005315
FAN SENSOR REALY BASE:	007-005315-01
PURGE RELAY: (8)PIN - DPDT - 120V - 60 SEC.	007-009166
RELAY SOCKET: 8 PIN 120V - PURGE	007-008938
PURGING LIGHT: NEON - AMBER	019-009258
BURNER READY LIGHT: NEON - CLEAR	019-009259
FAN GREENHECK - 38" – ADJUSTABLE PITCH:	038-008298
FAN GREENHECK - 43" – ADJUSTABLE PITCH:	038-008299
SPINNER DOMED - FAN GREENHECK 21" (HUB)	038-008300
SPLIT TAPER BUSHING- QD-E X 1 3/8: FAN - 10HP	056-008704
SPLIT TAPER BUSHING- QD-E X 1 5/8: FAN - 15/20HP	056-008705
SPLIT TAPER BUSHING- QD-E X 1 7/8: FAN - 25/30HP	056-008706
SPLIT TAPER BUSHING- QD-E X 2 1/8: FAN - 40/50HP	056-008707
SPLIT TAPER BUSHING- QD-E X 2 3/8: FAN - 60HP	056-008708

NOTE: FOR MOTORS, FAN PITCH, STARTER SIZES, AND WIRE SIZES REFER TO CHARTS.

BURNER AND IGNITION SYSTEM

BURNER SWITCH: TOGGLE - 4PDT ON/ON	010-005682
IGNITION FIRING LIGHT(S): NEON – AMBER	019-009258
BURNER PROVEN LIGHT(S): NEON – RED	019-009257
FLAME CONTROL(S): FIREYE – MicroM (TOTAL ASSEMBLY)	400-009858
CHASSIS MEC 120	007-009334
PROGRAMMER MODULE MEP 100	007-009335
AMPLIFIER MODULE MERT 4	007-009336
WIRING BASE: FLAME CONTROL	007-000741
RESET FLAME CONTROL LIGHT: NEON – RED	019-009257
FLAME SENSOR(S) ROD: AUBURN - FRS-4-6	031-001384
WIRE ASS'Y-FLAME SENSOR - 102"	400-006303
WIRE ASS'Y - GND BURNER - 102"	400-006304
IGNITION TRANSFORMER(S): ALLANSON - 120V	008-000755
IGNITION SPARK PLUG(S): CHAMPION - W95D	031-001955
WIRE ASS'Y-IGNITION TRANSFORMER TO SPARK PLUG - 109"	400-006302
IGNITION WIRE: (PER FOOT)	031-001366
FLAME RELAY & BURNER RELAY: (8)PIN - DPDT - 120V	007-000725
RELAY SOCKET: 8 PIN 120V	007-008938

BURNER DELAY OFF RELAY: (8)PIN - SPST - 120V	007-009167
RELAY SOCKET:8 PIN 120V - BURNER DELAY OFF	007-008938
BURNER (OCTAGON SHAPE) W/ ROUND TUBING	200-002951
PIPE PLUG 1″ –FOR CLEAN-OUT (INCLUDED WITH 200-002951)	026-001289
PIPE STREET-ELL 1″ 90 DEGREE	021-001116
ORFICE PIPE 1″ X 12″	100-003138
FLAME ROD MOUNTING TAB: USED TO MOUNT FLAME ROD FRS-4-6	100-005080
SPARK PLUG MOUNTING TAB: USED TO MOUNT SPARK PLUG W95D	100-003111
BURNER STANDOFF BRACKET 38": USED W/ 38" FANS 4 REQ'D	100-007362
BURNER STANDOFF BRACKET 43": USED W/ 43" FANS 4 REQ'D	100-003341
BOLT-WHIZ 3/8-16UNC X 1″ (FOUR –4 PER STANDOFF)	040-001483
NUT -WHIZ 3/8-16UNC X 1″ (FOUR –4 PER STANDOFF)	040-001460
BURNER COVER ASS'Y 38": USED W/ 38" & 43" FANS	400-003371

WET LOAD SYSTEM (LEVELING AUGER OR DRAG CONVEYOR)

LOAD SWITCH: TOGGLE - SPST - OFF/ON	010-005475
GRAIN LOADING LIGHT: NEON – AMBER	019-009258
FILL 8″ AUGER LEVEL CONTROL: HI-LO SWITCH DELUX	400-004198
FILL 10″ AUGER LEVEL CONTROL: HI-LO SWITCH DELUX	400-006737
FILL AUGER LEVEL CONTROL SWITCH: TILT SWITCH	010-003392
LOW GRAIN SHUTDOWN CONTROL: DELUX - ASS'Y –PADDLE MOTOR END	400-009196
LOW GRAIN SHUTDOWN CONTROL: DELUX - ASS'Y –PADDLE FILL END (40′)	400-009197
LOW GRAIN SHUTDOWN CONTROL SWITCH: SIDE PLUNGER SWITCH(BZE6-2RN)	010-003386
LOW GRAIN LIGHT(S): NEON – RED	019-009257

LEVELING 8" AND 10" AUGER KITS W/ 1 1/4" SHAFTS (SUPER EDGE FLIGHTING)

INCLUDES: AUGER(S), SHAFTS 1 1/4" W/BOLTS-SPLIT BEARING(S)-END BEARINGS

LEVELING 8" AUGER SET W/1 1/4" SHAFTS 10FT: **(SUPER EDGE FLIGHTING)**	035-006861
LEVELING 8" AUGER SET W/1 1/4" SHAFTS 15FT: **(SUPER EDGE FLIGHTING)**	035-006862
LEVELING 8" AUGER SET W/1 1/4" SHAFTS 20FT: **(SUPER EDGE FLIGHTING)**	035-006863
LEVELING 8" AUGER SET W/1 1/4" SHAFTS 25FT: **(SUPER EDGE FLIGHTING)**	035-006864
LEVELING 8" AUGER SET W/1 1/4" SHAFTS 30FT: **(SUPER EDGE FLIGHTING)**	035-006865
LEVELING 8" AUGER SET W/1 1/4" SHAFTS 40FT: **(SUPER EDGE FLIGHTING)**	035-006866
LEVELING 10" AUGER SET W/1 1/4" SHAFTS 10FT: **(SUPER EDGE FLIGHTING)**	035-007410
LEVELING 10" AUGER SET W/1 1/4" SHAFTS 15FT: **(SUPER EDGE FLIGHTING)**	035-007411
LEVELING 10" AUGER SET W/1 1/4" SHAFTS 20FT: **(SUPER EDGE FLIGHTING)**	035-007412
LEVELING 10" AUGER SET W/1 1/4" SHAFTS 25FT: **(SUPER EDGE FLIGHTING)**	035-007413
LEVELING 10" AUGER SET W/1 1/4" SHAFTS 30FT: **(SUPER EDGE FLIGHTING)**	035-007414
LEVELING 10" AUGER SET W/1 1/4" SHAFTS 40FT: **(SUPER EDGE FLIGHTING)**	035-006867

LEVELING 8" AUGER SECTIONS FOR 1 1/4" SHAFTS (SUPER EDGE FLIGHTING)

INCLUDES: AUGER ONLY - NO 1 1/4" SHAFTS OR BOLTS

LEVELING 8" AUGER SECTION FOR 1 1/4" SHAFTS 10FT: USE ON 10FT DRYERS ONLY **(SUPER EDGE FLIGHTING)**	200-006834
LEVELING 8" AUGER SECTION FOR 1 1/4" SHAFTS FRONT 10FT MOTOR END **(SUPER EDGE FLIGHTING)**	200-006723

DISCHARGE/LEVELING 8" AUGER SECTION FOR 1 1/4" SHAFTS 10FT: 200-006724
INTERMEDIATE 10FT: **(SUPER EDGE FLIGHTING)**

LEVELING 8" AUGER SECTION FOR 1 1/4" SHAFTS REAR 5FT: 200-006721
NON MOTOR END **(SUPER EDGE FLIGHTING)**

LEVELING 8" AUGER SECTION FOR 1 1/4" SHAFTS REAR 10FT: 200-006720
NON MOTOR END **(SUPER EDGE FLIGHTING)**

LEVELING 10" AUGER SECTIONS FOR 1 1/4" SHAFTS (SUPER EDGE FLIGHTING)
INCLUDES: AUGER ONLY - NO 1 1/4" SHAFTS OR BOLTS

LEVELING 10" AUGER SECTION FOR 1 1/4" SHAFTS 10FT: 200-007639
USE ON 10FT DRYERS ONLY **(SUPER EDGE FLIGHTING)**

LEVELING 10" AUGER SECTION FOR 1 1/4" SHAFTS FRONT 10FT 200-006794
MOTOR END **(SUPER EDGE FLIGHTING)**

LEVELING 10" AUGER SECTION FOR 1 1/4" SHAFTS 200-006793
INTERMEDIATE 10FT: **(SUPER EDGE FLIGHTING)**

LEVELING 10" AUGER SECTION FOR 1 1/4" SHAFTS REAR 5FT: 200-007640
NON MOTOR END **(SUPER EDGE FLIGHTING)**

LEVELING 10" AUGER SECTION FOR 1 1/4" SHAFTS REAR 10FT: 200-006792
NON MOTOR END **(SUPER EDGE FLIGHTING)**

LEVELING 8" AND 10" AUGER PARTS FOR 1 1/4" SHAFTS

LEVELING AUGER SHAFT 1 1/4" FRONT: KEYED - MOTOR END 100-006727
LEVELING AUGER SHAFT 1 1/4" INTERMEDIATE: 100-006726
LEVELING AUGER SHAFT 1 1/4" REAR: NON-KEYED 100-006728
BOLT - HEX, 7/16-16UNC X 3″ 040-005324
NUT – CROWN LOCK, 7/16-16UNC X 3″ 040-006732

END BEARING – 2-BOLT FLANGE - 1 1/4" BORE: 044-001510

INTERMEDIATE HANGER ASS'Y- 8″ LEVELING AUGER/TROUGH W/HARDWARE 400-006827
W/ 1-1/4″ SPLIT BEARING
INTERMEDIATE HANGER ASS'Y- 8″ LEVELING AUGER/TROUGH W/HARDWARE 200-007319
W/OUT 1-1/4″ SPLIT BEARING
AUGER TROUGH HANGER - 8″ LEVELING (10FT DRYER ONLY) 100-004700
INTERMEDIATE HANGER ASS'Y-10″ LEVELING AUGER/TROUGH W/HARDWARE 400-006829
W/ 1-1/4″ SPLIT BEARING
INTERMEDIATE HANGER ASS'Y-10″ LEVELING AUGER/TROUGH W/HARDWARE 200-007320
W/OUT 1-1/4″ SPLIT BEARING
HARDWARE NEEDED WITH EACH HANGER ASS'Y: (2) 042-001495 WASHER 5/16
(2) 040-001436 BOLT-HEX 5/16-18UNC X 1″ (2) 040-004068 NUT- LOCK 5/16-18UNC

HANGER BEARING–SPLIT WOOD-TOP HALF 1 1/4": 044-006714
HANGER BEARING–SPLIT WOOD-BOTTOM HALF 1 1/4": 044-006713
HANGER BEARING SADDLE 1 1/4": 044-006715

LEVELING AUGER BELT: B82 049-003364
LEVELING AUGER BELT: B76 049-007874

LEVELING AUGER SHEAVE SINGLE GROOVE: 1-B18.4-QD 056-005370
LEVELING AUGER SHEAVE DOUBLE GROOVE: 2-B18.4-QD 056-005372
LEVELING AUGER SHEAVE TRIPLE GROOVE: 3-B18.4-QD 056-006832
LEVELING AUGER SHEAVE SINGLE GROOVE: 1-B15.4-QD 056-007871
LEVELING AUGER SHEAVE DOUBLE GROOVE: 2-B15.4-QD 056-007872

LEVELING AUGER SHEAVE TRIPLE GROOVE: 3-B15.4-QD	056-007873
LEVELING AUGER BUSHING: SK-1 1/4" BORE	056-006830
LEVELING MOTOR SHEAVE SINGLE GROOVE: 1-B3.4QD	056-005371
LEVELING MOTOR SHEAVE DOUBLE GROOVE: 2-B3.4QD	056-005373
LEVELING MOTOR SHEAVE TRIPLE GROOVE: 3-B3.4QD	056-006833
BUSHING LEVELING AUGER MOTOR: SH- 7/8" BORE	056-005375
BUSHING LEVELING AUGER MOTOR: SH-1 1/8" BORE	056-005376
BUSHING LEVELING AUGER MOTOR: SH-1 3/8" BORE	056-006344

LEVELING 8" AND 10" AUGER TROUGH SECTIONS (STANDARD FLIGHTING)

INCLUDES: TROUGH ONLY, NO HARDWARE.

LEVELING 8" AUGER TROUGH 5FT:10FT DRYER ONLY	200-007002
LEVELING 8" AUGER TROUGH INTERMEDIATE 10FT:	200-006992
LEVELING 8" AUGER TROUGH REAR 5FT:	200-007002
LEVELING 8" AUGER TROUGH REAR 10FT:	200-006993
LEVELING 10" AUGER TROUGH FRONT 5FT:10FT DRYER ONLY	200-007000
LEVELING 10" AUGER TROUGH INTERMEDIATE 10FT:	200-006999
LEVELING 10" AUGER TROUGH REAR 5FT:	200-007000
LEVELING 10" AUGER TROUGH REAR 10FT:	200-007379

LEVELING DRAG CONVEYOR (OPTIONAL)

DRAG CHAIN: SIZE 8″ 2-5/8″ PITCH (**STRAIGHT** W/UHMW PADDLES-PER FT)	054-006838
DRAG CHAIN: CONNECTING LINK FOR 8″ CHAIN STRAIGHT PADS	054-006836
DRAG CHAIN: SPROCKET 9 TOOTH, 1 15/16″ BORE (2-5/8″ PITCH)	054-006837
DRAG CHAIN: SPROCKET 14 TOOTH, 1 15/16″ BORE (2-5/8″ PITCH)	054-008206
UHMW PADDLE REPLACEMENT 2-5/8″ PITCH **STRAIGHT PADDLES**	054-008743
DRAG CHAIN: ROLLER RETURN ASS'Y FOR 8" CHAIN	054-004508
DRAG SHAFT BEARINGS: FOUR(4) BOLT, 1 15/16" BORE	044-002067
DRAG SHAFT: HEAD - NON MOTOR END	100-004527
DRAG SHAFT: TAIL - MOTOR END	100-004546
COUPLING SPROCKET: 60 CHAIN, 18 TOOTH, 1 15/16" BORE DRAG SHAFT - HEAD - MOTOR END	047-001931
COUPLING SPROCKET: 60 CHAIN, 18 TOOTH, 1 1/8″ BORE REDUCER – HEAD – MOTOR	047-008281
COUPLING SPROCKET: 60 CHAIN, 18 TOOTH, 1 1/4" BORE REDUCER – HEAD – MOTOR	047-008282
COUPLING SPROCKET: 60 CHAIN, 18 TOOTH, 1 3/8″ BORE REDUCER – HEAD – MOTOR	047-006144
COUPLING SPROCKET: 60 CHAIN, 18 TOOTH, 1 1/2″ BORE REDUCER – HEAD – MOTOR	047-002779
COUPLING SPROCKET: 60 CHAIN, 18 TOOTH, 1 5/8″ BORE REDUCER – HEAD – MOTOR	047-001932
COUPLING SPROCKET: 60 CHAIN, 18 TOOTH, 1 3/4″ BORE REDUCER – HEAD – MOTOR	047-006145
COUPLING SPROCKET: 60 CHAIN, 18 TOOTH, 1 7/8″ BORE REDUCER – HEAD – MOTOR	047-008929
COUPLING CHAIN: DOUBLE WIDTH: SIZE # 6018	036-001930

WET LOAD SYSTEMS (OPTIONAL)
GRAVITY FLOW GARNER CONTROL SYSTEM W HIGH / LOW SWITCHES

GRAIN LEVEL CONTROL SWITCH: ROTARY BINDICATOR		010-002655
GRAIN LEVEL CONTROL LIGHTS: NEON – WHITE		019-009260

METERING ROLLS

MOTOR: 1 HP DC - 1750 RPM - 56C FR - 5/8" SH		004-001985
BRUSH KIT: 1HP DC BALDOR		004-006859
NOTE: CONTACT MOTOR MANUFACTURER FOR MOTOR WARRANTY OR SERVICE.		
GEAR REDUCER: 1 HP DC 60:1 RATIO - 1" SH - 56C FR		052-003962
SPROCKET METERING ROLLS: 40 CHAIN - 32 TOOTH – 1" BORE		200-003035
IDLER SPROCKET: 40 CHAIN - 17 TOOTH – 1/2" BORE		047-002982
ROLLER CHAIN: SIZE # 40 (PER FOOT)		046-001548
ROLLER CHAIN: CONNECTING LINK # 40		046-001552
ROLLER CHAIN: OFFSET LINK # 40		046-001556
FEEDROLLS: TWO REQ'D PER FIVE(5) FOOT COLUMN (P/N = ONE)		100-000099
BOLT –HEX 1/4-20UNC X 2″ (4 PER FIVE(5) FOOT COLUMN)		040-002178
NUT -HEX 1/4-20UNC (4 PER FIVE(5) FOOT COLUMN)		040-001455
WASHER –LOCK 1/4 (4 PER FIVE(5) FOOT COLUMN)		042-001498
FEEDROLL SHAFT 1" DIA – FRONT (KEYED)		100-000098
FEEDROLL SHAFT 1" DIA – INTERMEDIATE		100-000097
FEEDROLL SHAFT 1" DIA – REAR (NOT KEYED)		100-007990
FEEDROLL SHAFT BEARINGS: INSERT 1" W/O LOCK		044-001514
FEEDROLL SHAFT BEARINGS: 1″ SPLIT-WOOD	PR.	044-009102
BEARING HOLDERS: FLANGETTE TWO REQ'D PER BEARING	EA.	044-001957
BOLT CARRIAGE 5/16-18UNC X 3/4" (3 PER INSERT BEARING)		040-005439
BOLT WHIZ LOCK 5/16-18UNC X 1/2" (3 PER WOOD BEARING)		040-006791
NUT WHIZ LOCK 5/16-18UNC (3 PER BEARING)		040-001459
FEEDROLL SHELF PLATE (GALV)		100-009065

FEEDROLL MONITOR CONTROL

FEEDROLL MONITOR COMPLETE ASS'Y (10FT ONLY)	400-009202
FEEDROLL MONITOR COMPLETE ASS'Y	400-009195
FEEDROLL MONITOR PANEL SWITCH: TOGGLE - SPST - OFF/ON	010-005475
FEEDROLL TIME DELAY RELAY: (8)PIN DPDT - 120V - 15 SEC.	007-009166
RELAY SOCKET: (8) PIN 120V - FEEDROLL MONITOR TIME DELAY	007-008938
FEEDROLL MONITOR SENSOR SWITCH: SWITCH – ROLLER	010-005767
FEED ROLL MONITOR CAM: DELUX	200-006019

DRY UNLOAD SYSTEM (DISCHARGE 8" AUGER OR DRAG CONVEYOR)

UNLOAD SWITCH: TOGGLE - SPST - OFF/ON	010-005475
GRAIN UNLOADING LIGHT: NEON - CLEAR	019-009259

DISCHARGE 8" AUGER KITS W/ 1 1/4" SHAFTS (SUPER EDGE FLIGHTING)

INCLUDES: AUGER(S), SHAFTS, BOLTS/NUTS, SPLIT BEARINGS & END BEARING

(NO DISCHARGE EXTENSION AUGER)

DISCHARGE 8" AUGER SET W/1 1/4" SHAFTS 10FT: **(SUPER EDGE FLIGHTING)**	035-006869
DISCHARGE 8" AUGER SET W/1 1/4" SHAFTS 15FT: **(SUPER EDGE FLIGHTING)**	035-006870
DISCHARGE 8" AUGER SET W/1 1/4" SHAFTS 20FT: **(SUPER EDGE FLIGHTING)**	035-006871
DISCHARGE 8" AUGER SET W/1 1/4" SHAFTS 25FT: **(SUPER EDGE FLIGHTING)**	035-006872
DISCHARGE 8" AUGER SET W/1 1/4" SHAFTS 30FT: **(SUPER EDGE FLIGHTING)**	035-006873
DISCHARGE 8" AUGER SET W/1 1/4" SHAFTS 40FT: **(SUPER EDGE FLIGHTING)**	035-006874

DISCHARGE AUGERS EXTENSION W/ 1 1/4" SHAFTS (SUPER EDGE FLIGHTING)

INCLUDES: AUGER ONLY NO SHAFTS OR HARDWARE

DISCHARGE 8″ AUGER EXT FOR/1 1/4″ SHAFTS **(SUPER EDGE FLIGHT)**	1′	200-006875
DISCHARGE 8″ AUGER EXT FOR/1 1/4″ SHAFTS **(SUPER EDGE FLIGHT)**	1′6″	200-006876
DISCHARGE 8″ AUGER EXT FOR/1 1/4″ SHAFTS **(SUPER EDGE FLIGHT)**	2′	200-006877
DISCHARGE 8″ AUGER EXT FOR/1 1/4″ SHAFTS **(SUPER EDGE FLIGHT)**	2′6″	200-008597
DISCHARGE 8″ AUGER EXT FOR/1 1/4″ SHAFTS **(SUPER EDGE FLIGHT)**	3′	200-006878
DISCHARGE 8″ AUGER EXT FOR/1 1/4″ SHAFTS **(SUPER EDGE FLIGHT)**	4′	200-006879
DISCHARGE 8″ AUGER EXT FOR/1 1/4″ SHAFTS **(SUPER EDGE FLIGHT)**	5′	200-006880
DISCHARGE 8″ AUGER EXT FOR/1 1/4″ SHAFTS **(SUPER EDGE FLIGHT)**	6′	200-006881
DISCHARGE 8″ AUGER EXT FOR/1 1/4″ SHAFTS **(SUPER EDGE FLIGHT)**	7′	200-006882
DISCHARGE 8″ AUGER EXT FOR/1 1/4″ SHAFTS **(SUPER EDGE FLIGHT)**	8′	200-006883

DISCHARGE 8" AUGER SECTIONS FOR 1 1/4" SHAFTS (SUPER EDGE FLIGHTING)

INCLUDES: AUGER ONLY NO SHAFTS OR BOLTS

DISCHARGE 8" AUGER SECTION FOR 1 1/4" SHAFTS 5FT:	200-006725
DISCHARGE/LEVELING 8" AUGER SECTION FOR 1 1/4" SHAFTS 10FT:	200-006724

DISCHARGE 8" AUGER PARTS FOR 1 1/4" SHAFTS

DISCHARGE AUGER SHAFT 1 1/4" FRONT: KEYED - MOTOR END:	100-006727
DISCHARGE AUGER SHAFT 1 1/4" INTERMEDIATE:	100-006726
DISCHARGE AUGER SHAFT 1 1/4" REAR: NON-KEYED	100-006728
BOLT - HEX, 7/16-16UNC X 3″	040-005324
NUT – CROWN LOCK, 7/16-16UNC X 3″	040-006732
END BEARING – 2-BOLT FLANGE - 1 1/4" BORE:	044-001510
HANGER ASS′Y – DISCHARGE 8″ AUGER FOR 1 1/4" SHAFTS INTERMEDIATE & REAR **WITH** SPLIT BEARING:	400-006852
HANGER ASS'Y - DISCHARGE 8" AUGER FOR 1 1/4" SHAFTS INTERMEDIATE & REAR **W/OUT** SPLIT BEARING:	200-007322
HANGER BEARING–SPLIT WOOD-TOP HALF 1 1/4":	044-006714
HANGER BEARING–SPLIT WOOD-BOTTOM HALF 1 1/4":	044-006713
HANGER BEARING SADDLE 1 1/4":	044-006715
ROLLER CHAIN: SIZE # 40 (PER FOOT)	046-001548
ROLLER CHAIN: CONNECTING LINK # 40	046-001552
ROLLER CHAIN: OFFSET LINK # 40	046-001556

DISCHARGE 8" AUGER EXTENSION TROUGHS

INCLUDES: ONLY THE TROUGH - NO TOP/AUGERS OR HARDWARE

DISCHARGE 8" AUGER TROUGH EXTENSION: 1′	200-005396
DISCHARGE 8" AUGER TROUGH EXTENSION: 1′ 6″ (18″)	200-005848
DISCHARGE 8" AUGER TROUGH EXTENSION: 2′	200-005413
DISCHARGE 8" AUGER TROUGH EXTENSION: 2′ 6″ (30″)	200-008600
DISCHARGE 8" AUGER TROUGH EXTENSION: 3′	200-005408
DISCHARGE 8" AUGER TROUGH EXTENSION: 4	200-005414
DISCHARGE 8" AUGER TROUGH EXTENSION: 5′	200-005854
DISCHARGE 8" AUGER TROUGH EXTENSION: 6′	200-005861
DISCHARGE 8" AUGER TROUGH EXTENSION: 7′	200-005867
DISCHARGE 8" AUGER TROUGH EXTENSION: 8′	200-005873

DISCHARGE 8" AUGER EXTENSION TOPS

INCLUDES: ONLY THE TOP - NO TROUGH/AUGER OR HARDWARE

DISCHARGE 8" AUGER TROUGH TOP: 1′	100-005399
DISCHARGE 8" AUGER TROUGH TOP: 1′ 6″ (18″)	100-005850
DISCHARGE 8" AUGER TROUGH TOP: 2′	100-005409
DISCHARGE 8" AUGER TROUGH TOP: 2′ 6″ (30″)	100-008599
DISCHARGE 8" AUGER TROUGH TOP: 3′	100-005406
DISCHARGE 8" AUGER TROUGH TOP: 4	100-005410
DISCHARGE 8" AUGER TROUGH TOP: 5′	100-005856
DISCHARGE 8" AUGER TROUGH TOP: 6′	100-005863
DISCHARGE 8" AUGER TROUGH TOP: 7′	100-005869
DISCHARGE 8" AUGER TROUGH TOP: 8′	100-005875

DISCHARGE 8" AUGER TROUGH SECTIONS W/ SLIDE GATES

INCLUDES: ONLY THE TROUGH W/ SLIDE GATES, NO HARDWARE

DISCHARGE 8" AUGER TROUGH SECTION 5FT FOR ALL DRYERS:	400-005496
DISCHARGE 8" AUGER TROUGH SECTION 10FT FOR ALL DRYERS:	400-005495

DISCHARGE 8" AUGER TROUGH SECTIONS W/OUT SLIDE GATES

INCLUDES: ONLY THE TROUGH NO SLIDE GATES, NO HARDWARE

DISCHARGE 8" AUGER TROUGH SECTION 5FT FOR ALL DRYERS:	200-005499
DISCHARGE 8" AUGER TROUGH SECTION 10FT FOR ALL DRYERS:	200-005498

DISCHARGE 8″ AUGER TROUGH PARTS

SLIDE GATE: DISCHARGE 8″ AUGER TROUGH:	100-005503
SLIDE GATE RAIL: DISCHARGE 8″ AUGER TROUGH (TWO REQ′D)	100-005502
AUGER TROUGH DOOR ASS′Y:	400-007643
AUGER TROUGH COVER ANGLE:	100-005912

NOTE: P/N 040-001449 TCS 1/4″ X 1/2″ USED TO MTG. AUGER TROUGH COVER ANGLE TO AUGER DOOR (QT′Y. PER DOOR 6).

DISCHARGE OVERFLOW MONITOR (AUGERS ONLY)

DISCHARGE OVERFLOW SWITCH: SELECTASWITCH W/COIL FEELER	010-006716
PADDLE – DISCHARGE OVERFLOW SWITCH (COIL FEELER)	100-008308
BRACKET - DISCHARGE OVERFLOW SWITCH (COIL FEELER)	100-003374

DISCHARGE DRAG CONVEYOR

DRAG CHAIN: SIZE 8″ 2-5/8″ PITCH (**STRAIGHT** W/UHMW PADDLES-PER FT)	054-006838
DRAG CHAIN: CONNECTING LINK FOR 8″ CHAIN STRAIGHT PADS	054-006836
DRAG CHAIN: SPROCKET 9 TOOTH, 1 15/16″ BORE (2-5/8″ PITCH)	054-006837
DRAG CHAIN: SPROCKET 14 TOOTH, 1 15/16″ BORE (2-5/8″ PITCH)	054-008206
UHMW PADDLE REPLACEMENT 2-5/8″ PITCH **STRAIGHT PADDLES**	054-008743
DRAG CHAIN: ROLLER RETURN ASS'Y FOR 8″ CHAIN	054-004508
DRAG SHAFT BEARINGS: FOUR(4) BOLT, 1 15/16″ BORE	044-002067
DRAG SHAFT: TAIL – NON MOTOR END	100-004527
DRAG SHAFT: HEAD - MOTOR END	100-004546
COUPLING SPROCKET: 60 CHAIN, 18 TOOTH, 1 15/16″ BORE DRAG SHAFT – HEAD – MOTOR END	047-001931
COUPLING SPROCKET: 60 CHAIN, 18 TOOTH, 1 1/8″ BORE REDUCER – HEAD – MOTOR	047-008281
COUPLING SPROCKET: 60 CHAIN, 18 TOOTH, 1 1/4" BORE REDUCER – HEAD – MOTOR	047-008282
COUPLING SPROCKET: 60 CHAIN, 18 TOOTH, 1 3/8″ BORE REDUCER – HEAD – MOTOR	047-006144
COUPLING SPROCKET: 60 CHAIN, 18 TOOTH, 1 1/2″ BORE REDUCER – HEAD – MOTOR	047-002779
COUPLING SPROCKET: 60 CHAIN, 18 TOOTH, 1 5/8″ BORE REDUCER – HEAD – MOTOR	047-001932
COUPLING SPROCKET: 60 CHAIN, 18 TOOTH, 1 3/4″ BORE REDUCER – HEAD – MOTOR	047-006145
COUPLING SPROCKET: 60 CHAIN, 18 TOOTH, 1 7/8″ BORE REDUCER – HEAD – MOTOR	047-008929
COUPLING CHAIN: DOUBLE WIDTH: SIZE # 6018	036-001930

NOTE: FOR MOTORS, GEAR REDUCERS, STARTER SIZES AND WIRE SIZES REFER TO THE CHARTS.

BOTTOM COVER – INT. 5FT SECTION - 8″ DRAG CONVEYOR	100-004531
BOTTOM COVER – INT. 4FT SECTION - 8″ DRAG CONVEYOR	100-004562
BOTTOM COVER – 18″ HEAD SECTION - 8″ DRAG CONVEYOR	100-008730
BOTTOM COVER – TAIL SECTION - 8″ DRAG CONVEYOR	100-008558

AUTOMATIC MOISTURE CONTROL SYSTEM

SCR CONTROL: KB DC DRIVE – MODIFIED	006-009080
FUSE: 15 AMP - SCR CONTROL (KB DC DRIVE)	000-004705
FUSE: 20 AMP - SCR CONTROL (KB DC DRIVE)	000-009326
MOISTURE SENSOR:(ONLY) MINCO – 100 OHM-RTD 3-WIRE LENGTH 9FT	009-007200
MOISTURE SENSOR ASS'Y MINCO – 100 OHM-RTD 3-WIRE LENGTH 9FT	400-008027
MOISTURE SENSOR:(ONLY) MINCO – 100 OHM-RTD 3-WIRE LENGTH 19FT	009-007201
MOISTURE SENSOR ASS'Y MINCO – 100 OHM-RTD 3-WIRE LENGTH 19FT	400-008028
MOISTURE SENSOR:(ONLY) MINCO – 100 OHM-RTD 3-WIRE LENGTH 29FT	009-007202
MOISTURE SENSOR ASS'Y MINCO – 100 OHM-RTD 3-WIRE LENGTH 29FT	400-008029

(STANDARD PID MOISTURE CONTROLS)

MOISTURE CONTROL PID: WATLOW EZ-ZONE (PM6C1FA-AAAAAAA)	006-009168
POT MANUAL SPEED CONTROL SCR: 5K W/WIRES	400-009072

KNOB: POT MANUAL SPEED CONTROL SCR	006-000713
SCR SELECTOR SWITCH MAN/AUTO: TOGGLE - DPDT ON/OFF/ON	010-003132
DC VOLTMETER: SIMPSON MODEL 1227 0 TO 100VDC	017-007946
MOISTURE RELAY: (8)PIN - DPDT - 120V	007-000725
RELAY SOCKET: 8 PIN 120V - MOISTURE	007-008938

--- OR ---

(OPTIONAL MOISTURELINK MOISTURE CONTROLS)

MOISTURELINK CONTROL MODULE; OCS-HORNER HE-XL1EO	006-010047
CABLE-CAT5E-3FT-UNSHIELDED-YELLOW	012-010164
CABLE-CAT5E-7FT-SHIELDED-BLUE	012-010163
TRANSFORMER – 30W / 1.3AMP	008-010052
RELAY – DPDT 24VDC COIL 8 PIN	007-010054
BASE-I/O MODULES-ETHERNET SMARTRAIL-HORNER	006-010366
BASE-I/O MODULE-ANALOG INPUT/OUTPUT 2CH/2CH-SMARTRAIL -HORNER	006-010049
BASE-I/O MODULE-DC INPUT/RELAY OUT 8IN/8RLY-SMARTRAIL -HORNER	006-010050
BASE-I/O MODULE- ANALOG INPUT 4CH RTD-SMARTRAIL -HORNER	006-010051
ANALOG SIGNAL CONVERTER/ISOLATOR 0-10VDC IN/OUT	006-010099
DATA CARD-2GB-MICRO SD-W/ADAPT.	006-010157
FUSE - 2AMP - 1/4"X1-1/4 –FAST ACTING	000-010156
MOISTURE LINK DISCHARGE SAMPLER ASSEMBLY W/MOTOR	400-010113

(MOISTURELINK PLUS OPTION)

CELLULAR GATEWAY-DIGI 3G CON WAN DC-WAN-U805	006-010059
CABLE-CAT5E-7FT-SHEILDED-BLUE	012-010163
CABLE-COAXIAL-RG58-SMA/M TO SMA/F-5FT	012-010163

AUTOMATIC TEMPERATURE CONTROL SYSTEM

AUTOMATIC TEMP./H. LIMIT: WATLOW EZ-ZONE (PM6CFA-ALEJAAA)(STD.)	006-009149

--- OR ---

AUTOMATIC TEMP/HL/MRTU: WATLOW EZ-ZONE (PM6C1FA-1LEJAAA) (USED WITH OPTIONAL MOISTURELINK SYSTEM)	006-009888
TEMPERATURE CONTROL SENSOR: WATLOW 100Ω RTD STEM	009-007199
HIGH LIMIT SENSOR: WATLOW 100Ω RTD STEM	009-007199
TEMPERATURE/HIGH LIMIT SENSORS BOX ASSEMBLY	400-009304
QUICK ACTING VALVE: 1/2"	028-003013
QUICK ACTING VALVE: 3/4"	028-005529
RELIEF VALVE W/ RAIN CAP: POP ACTION	028-003014
RAIN CAP: RELIEF VALVE	028-003015
LIQUID VALVE: ASCO 1/2"	028-003097
LIQUID VALVE: ASCO 3/4"	028-005482
REPLACEMENT COIL LIQUID VALVE: ASCO 1/2" & 3/4"	014-006291
REPLACEMENT DIAPHRAGM KIT LIQUID VALVE: ASCO 1/2"	028-005206
REPLACEMENT DIAPHRAGM KIT LIQUID VALVE: ASCO 3/4"	028-007150
VAPORIZER: 8″ ROUND FIN (4-ROW)	031-003093

VAPORIZER: 16″ ROUND FIN (8-ROW)	031-003094
VAPORIZER: 24″ ROUND FIN (12-ROW)	031-003095
LIQUID PROPANE REGULATOR: REGO 1/2" MAX 30#	028-003012
LIQUID PROPANE REGULATOR: 2", 8-20#	028-006316
TEMP. CONTROL BUTTERFLY VALVE W/LINKAGE KIT: MAXON 1-1/4″	028-010346
TEMP. CONTROL BUTTERFLY VALVE W/LINKAGE KIT: MAXON 2″	028-010347
TEMPERATURE CONTROL MODULATING MOTOR: HONEYWELL M7284A2004/U	004-010348
PRESSURE GAUGE: MAX 30#	017-001033
PRESSURE GAUGE: MAX 60#	017-008459
BALL VALVE: 1/2" FULL PORT	028-003026
BALL VALVE: 1 1/4" FULL PORT	028-003027
BALL VALVE: 2" FULL PORT	028-005362
AUTOMATIC SHUTOFF VALVE: ASCO 1 1/4″	028-003098
REPLACEMENT COIL AUTOMATIC VALVE: ASCO 1 1/4"	014-000852
AUTOMATIC SHUTOFF VALVE: ASCO 2″	028-004623
REPLACEMENT COIL AUTOMATIC VALVE: ASCO 2"	014-000852
--- OR OPTIONAL ---	
MANUAL SHUTOFF VALVE: MAXON 1 1/4"	028-001309
REPLACEMENT COIL MANUAL SHUTOFF VALVE: MAXON 1 1/4"	014-000853
MANUAL SHUTOFF VALVE: MAXON 2"	028-001311
REPLACEMENT COIL MANUAL SHUTOFF VALVE: MAXON 2"	014-000854

NOTE: FOR ORIFICE SIZES, MANIFOLD PIPE SIZES, LIQUID PIPE SIZES, VAPOR PIPE SIZES, SOLENOID VALVE SIZES, BUTTERFLY VALVE SIZES, LIQUID VALVE SIZES AND VAPORIZERS REFER TO CHARTS.

(CANADIAN STANDARD ASSEMBLY OPTIONAL)

AUTOMATIC SHUTOFF VALVE: MAXON 1 1/4" (SLOW OPENING)	028-007558
REPLACEMENT COIL SHUTOFF VALVE: MAXON 1 1/4"	014-000853
AUTOMATIC SHUTOFF VALVE: MAXON 2" (SLOW OPENING)	028-007778
REPLACEMENT COIL SHUTOFF VALVE: MAXON 2"	014-000854
SWITCH – HIGH/LOW PRESSURE LIMIT: ASCO	010-007559
PRESSURE TRANSDUCER: 0- 9 PSI – ASCO	010-007736
PRESSURE TRANSDUCER: 4-36 PSI – ASCO	010-007738

LABELS AND DECALS

DECAL: "DELUX" - 6" HIGH - BLUE	018-006813
LABEL: "CAUTION DO NOT ENTER"	018-002407
LABEL: "DANGER HIGH VOLAGE"	018-001070
LABEL: "START-UP PROCEDURE"	018-007949
LABEL: "FACTORY - SALES * SERVICE * PARTS	018-006254
LABEL: "WARNING "STOP"	018-004742
LABEL: "POWER BELT WARNING"	018-004743
LABEL: "WARNING POWER AUGER"	018-004744
LABEL: "CAUTION KEEP HANDS CLEAR"	018-001071
LABEL: "BURNER COVER"	018-003401
LABEL: "EMERGENCY SLIDE GATES"	018-006806
LABEL: "DO NOT WALK ON GARNER (ROOF)"	018-006809
LABEL: "OPEN FRESH AIR DOOR "FULL OPEN"	018-006808
LABEL: "OPEN FRESH AIR DOOR AS NEEDED" NOT LESS THAN.."	018-006807

DOOR HANDLES, LATCHES, HINGES AND MISC. ITEMS

DOOR HANDLE: LOCKING - PANEL BOX BRAND: AUSTIN KEY # BP112	040-001476
CAM LATCH: UPPER DOOR - PANEL BOX	040-006707
CAM LATCH: LOWER DOOR - PANEL BOX	040-006848
DOOR LATCH: SPRING - SWITCH PANEL - PANEL BOX	040-002941
DOOR HANDLE: “L” - 360° NON-LOCKING	040-010529
DOOR HANDLE: INSIDE – “L” PLENUM AND COOLING DOOR	040-010402
CAM LATCH: PLENUM AND COOLING DOOR	040-006707
DOOR LATCH: RECLAIM DOOR	043-001503
VIEWING WINDOW - PLENUM	100-006167
VIEWING WINDOW HOLDER - PLENUM	100-006168

(OPTIONAL FEATURE) EXHAUST LIMITS

SENSOR ONLY: 20FT	006-006925

(OPTIONAL FEATURE) ALARM KIT

HORN: 120V SURFACE MOUNT	016-008037
LIGHT FIXTURE ASS'Y: 90 DEGREE	016-005975
LIGHT: RED BULB	019-001091

DELUX

Continuous Flow GRAIN DRYERS

SPECIFICATION CHARTS

- DP & DPSL SERIES
- DPX & DPXSL SERIES
- DPX4T SERIES
- DPX8T SERIES
- DPX12T SERIES
- DPX16GT SERIES

COMBINATON STARTERS – SIEMENS (2014)

SIEMENS CATALOG NUMBER

DELUX PART NUMBER

240V 3P						
HP	**COMBINATION STARTER**	**TERM. BLOCK (FOR UL508 TYPE E)**	**OVERLOAD CONTACT**	*** ADDITIONAL AUX. CONTACT**	**FLA RANGE**	**MOTOR AMPS**
1	3RA61201CP32 001-010064	3RV2925-5EB 001-010074	INCL.	3RA6911-1A 001-010076	1.0 – 4.0	3.0
2	3RA61201DP32 001-010065	3RV2925-5EB 001-010074	INCL.	3RA6911-1A 001-010076	3.0 – 12.0	5.8
3	3RA61201DP32 001-010065	3RV2925-5EB 001-010074	INCL.	3RA6911-1A 001-010076	3.0 – 12.0	8.4
5	3RA61201EP32 001-010066	3RV2925-5EB 001-010074	INCL.	3RA6911-1A 001-010076	8.0 – 32.0	13.4
7.5	3RA61201EP32 001-010066	3RV2925-5EB 001-010074	INCL.	3RA6911-1A 001-010076	8.0 – 32.0	18.8
10	3RA61201EP32 001-010066	3RV2925-5EB 001-010074	INCL.	3RA6911-1A 001-010076	8.0 – 32.0	24.0
15	3RA1135-4FB35-1AK6 001-010067	NA	INCL.	3RH1921-1EA11 001-010086	28 – 40	36.2
20	3RA1145-4JB44-1AK6 001-010070	3RT1946-4GA07 001-010075	3RV1901-1A 001-010137	3RH1921-1EA11 001-010086	45 - 63	48.0
25	3RA1145-4KB44-1AK6 001-010071	3RT1946-4GA07 001-010075	3RV1901-1A 001-010137	3RH1921-1EA11 001-010086	57 – 75	60.0
30	3RA1145-4LB46-1AK6 001-010072	3RT1946-4GA07 001-010075	3RV1901-1A 001-010137	3RH1921-1EA11 001-010086	70 - 90	76.0
40	3RA1145-4MB46-1AK6 001-010073	3RT1946-4GA07 001-010075	3RV1901-1A 001-010137	3RH1921-1EA11 001-010086	80 - 100	96.0
HP	**BREAKER**	**CONTACTOR**	**OVERLOAD**	**TERMINAL BLOCK (x 2)**	**OVERLOAD RANGE**	**MOTOR AMPS**
50	FXD63A150L 015-010089	3RT1055-6AF36 (150A) 001-008692	3RB2056-1FW2 001-010088	3RT1956-4G 001-008695	50 - 200	116.0
60	FXD63A250L 015-010090	3RT1055-6AF36 (150A) 001-008692	3RB2056-1FW2 001-010088	3RT1956-4G 001-008695	50 - 200	135.0

* ADDITIONAL AUX. CONTACT REQUIRED FOR LOAD STARTER ON ALL DRYERS AND UNLOAD ON STARTER WITH MOISTURELINK.

480V 3P						
HP	**COMBINATION STARTER**	**TERM. BLOCK (FOR UL508 TYPE E)**	**OVERLOAD CONTACT**	*** ADDITIONAL AUX. CONTACT**	**FLA RANGE**	**MOTOR AMPS**
1	3RA61201CP32 001-010064	3RV2925-5EB 001-010074	INCL.	3RA6911-1A 001-010076	1.0 – 4.0	1.5
2	3RA61201CP32 001-010064	3RV2925-5EB 001-010074	INCL.	3RA6911-1A 001-010076	1.0 – 4.0	2.9
3	3RA61201DP32 001-010065	3RV2925-5EB 001-010074	INCL.	3RA6911-1A 001-010076	3.0 – 12.0	4.2
5	3RA61201DP32 001-010065	3RV2925-5EB 001-010074	INCL.	3RA6911-1A 001-010076	3.0 – 12.0	6.7
7.5	3RA61201DP32 001-010065	3RV2925-5EB 001-010074	INCL.	3RA6911-1A 001-010076	3.0 – 12.0	9.4
10	3RA61201EP32 001-010066	3RV2925-5EB 001-010074	INCL.	3RA6911-1A 001-010076	8.0 – 32.0	12.0
15	3RA61201EP32 001-010066	3RV2925-5EB 001-010074	INCL.	3RA6911-1A 001-010076	8.0 – 32.0	18.1
20	3RA61201EP32 001-010066	3RV2925-5EB 001-010074	INCL.	3RA6911-1A 001-010076	8.0 – 32.0	24.0
25	3RA1135-4FB35-1AK6 001-010067	NA	INCL.	3RH1921-1EA11 001-010086	28 – 40	30.0
30	3RA1135-4GB35-1AK6 001-010068	NA	INCL.	3RH1921-1EA11 001-010086	36 – 45	38.0
40	3RA1135-4HB36-1AK6 001-010069	NA	INCL.	3RH1921-1EA11 001-010086	40 - 50	48.0
50	3RA1145-4JB44-1AK6 001-010070	3RT1946-4GA07 001-010075	3RV1901-1A 001-010137	3RH1921-1EA11 001-010086	45 – 63	58.0
60	3RA1145-4KB45-1AK6 001-010071	3RT1946-4GA07 001-010075	3RV1901-1A 001-010137	3RH1921-1EA11 001-010086	57 – 75	67.8

* ADDITIONAL AUX. CONTACT REQUIRED FOR LOAD STARTER ON ALL DRYERS AND UNLOAD ON STARTER WITH MOISTURELINK.

575V 3P						
HP	**COMBINATION STARTER**	**TERM. BLOCK (FOR UL508 TYPE E)**	**OVERLOAD CONTACT**	*** ADDITIONAL AUX. CONTACT**	**FLA RANGE**	**MOTOR AMPS**
1	3RA61201CP32 001-010064	3RV2925-5EB 001-010074	INCL.	3RA6911-1A 001-010076	1.0 – 4.0	1.2
2	3RA61201CP32 001-010064	3RV2925-5EB 001-010074	INCL.	3RA6911-1A 001-010076	1.0 – 4.0	2.4
3	3RA61201CP32 001-010064	3RV2925-5EB 001-010074	INCL.	3RA6911-1A 001-010076	1.0 – 4.0	3.3
5	3RA61201DP32 001-010065	3RV2925-5EB 001-010074	INCL.	3RA6911-1A 001-010076	3.0 – 12.0	5.3
7.5	3RA61201DP32 001-010065	3RV2925-5EB 001-010074	INCL.	3RA6911-1A 001-010076	3.0 – 12.0	7.6
10	3RA61201DP32 001-010065	3RV2925-5EB 001-010074	INCL.	3RA6911-1A 001-010076	3.0 – 12.0	9.6
15	3RA61201EP32 001-010066	3RV2925-5EB 001-010074	INCL.	3RA6911-1A 001-010076	8.0 – 32.0	14.8
20	3RA61201EP32 001-010066	3RV2925-5EB 001-010074	INCL.	3RA6911-1A 001-010076	8.0 – 32.0	19.2
25	3RA61201EP32 001-010066	3RV2925-5EB 001-010074	INCL.	3RA6911-1A 001-010076	8.0 – 32.0	23.9
30	3RA61201EP32 001-010066	3RV2925-5EB 001-010074	INCL.	3RA6911-1A 001-010076	8.0 – 32.0	29.0
40	3RA1135-4GB35-1AK6 001-010068	NA	INCL.	3RH1921-1EA11 001-010086	36 – 45	39.0
50	3RA1135-4HB36-1AK6 001-010069	NA	INCL.	3RH1921-1EA11 001-010086	40 - 50	46.0
60	3RA1145-4JB44-1AK6 001-010070	3RT1946-4GA07 001-010075	3RV1901-1A 001-010137	3RH1921-1EA11 001-010086	45 – 63	54.4

* ADDITIONAL AUX. CONTACT REQUIRED FOR LOAD STARTER ON ALL DRYERS AND UNLOAD ON STARTER WITH MOISTURELINK.

380V 3P						
HP	**COMBINATION STARTER**	**TERM. BLOCK (FOR UL508 TYPE E)**	**OVERLOAD CONTACT**	*** ADDITIONAL AUX. CONTACT**	**FLA RANGE**	**MOTOR AMPS**
1	3RA61201CP32 001-010064	3RV2925-5EB 001-010074	INCL.	3RA6911-1A 001-010076	1.0 – 4.0	1.8
2	3RA61201CP32 001-010064	3RV2925-5EB 001-010074	INCL.	3RA6911-1A 001-010076	1.0 – 4.0	3.4
3	3RA61201DP32 001-010065	3RV2925-5EB 001-010074	INCL.	3RA6911-1A 001-010076	3.0 – 12.0	4.4
5	3RA61201DP32 001-010065	3RV2925-5EB 001-010074	INCL.	3RA6911-1A 001-010076	3.0 – 12.0	8.6
7.5	3RA61201EP32 001-010066	3RV2925-5EB 001-010074	INCL.	3RA6911-1A 001-010076	8.0 – 32.0	11.2
10	3RA61201EP32 001-010066	3RV2925-5EB 001-010074	INCL.	3RA6911-1A 001-010076	8.0 – 32.0	14.7
15	3RA61201EP32 001-010066	3RV2925-5EB 001-010074	INCL.	3RA6911-1A 001-010076	8.0 – 32.0	22.0
20	3RA61201EP32 001-010066	3RV2925-5EB 001-010074	INCL.	3RA6911-1A 001-010076	8.0 – 32.0	28.0
25	3RA1135-4FB35-1AK6 001-010067	NA	INCL.	3RH1921-1EA11 001-010086	28 – 40	35.0
30	3RA1135-4HB36-1AK6 001-010069	NA	INCL.	3RH1921-1EA11 001-010086	40 - 50	42.0
40	3RA1145-4JB44-1AK6 001-010070	3RT1946-4GA07 001-010075	3RV1901-1A 001-010137	3RH1921-1EA11 001-010086	45 – 63	56.0
50	3RA1145-4KB45-1AK6 001-010071	3RT1946-4GA07 001-010075	3RV1901-1A 001-010137	3RH1921-1EA11 001-010086	57 – 75	67.0
60	3RA1145-4LB46-1AK6 001-010072	3RT1946-4GA07 001-010075	3RV1901-1A 001-010137	3RH1921-1EA11 001-010086	70 - 90	80.5

* ADDITIONAL AUX. CONTACT REQUIRED FOR LOAD STARTER ON ALL DRYERS AND UNLOAD ON STARTER WITH MOISTURELINK.

208V 3P						
HP	**COMBINATION STARTER**	**TERM. BLOCK (FOR UL508 TYPE E)**	**OVERLOAD CONTACT**	*** ADDITIONAL AUX. CONTACT**	**FLA RANGE**	**MOTOR AMPS**
1	3RA61201CP32 001-010064	3RV2925-5EB 001-010074	INCL.	3RA6911-1A 001-010076	1.0 – 4.0	3.1
2	3RA61201DP32 001-010065	3RV2925-5EB 001-010074	INCL.	3RA6911-1A 001-010076	3.0 – 12.0	6.0
3	3RA61201DP32 001-010065	3RV2925-5EB 001-010074	INCL.	3RA6911-1A 001-010076	3.0 – 12.0	9.0
5	3RA61201EP32 001-010066	3RV2925-5EB 001-010074	INCL.	3RA6911-1A 001-010076	8.0 – 32.0	13.9
7.5	3RA61201EP32 001-010066	3RV2925-5EB 001-010074	INCL.	3RA6911-1A 001-010076	8.0 – 32.0	21.0
10	3RA61201EP32 001-010066	3RV2925-5EB 001-010074	INCL.	3RA6911-1A 001-010076	8.0 – 32.0	25.4
15	3RA1135-4GB36-1AK6 001-010068	NA	INCL.	3RH1921-1EA11 001-010086	36 – 45	38.0
20	3RA1145-4JB44-1AK6 001-010070	3RT1946-4GA07 001-010075	3RV1901-1A 001-010137	3RH1921-1EA11 001-010086	45 – 63	51.0
25	3RA1145-4KB45-1AK6 001-010071	3RT1946-4GA07 001-010075	3RV1901-1A 001-010137	3RH1921-1EA11 001-010086	57 – 75	63.3
30	3RA1145-4LB46-1AK6 001-010072	3RT1946-4GA07 001-010075	3RV1901-1A 001-010137	3RH1921-1EA11 001-010086	70 - 90	78.0
HP	**BREAKER**	**CONTACTOR**	**OVERLOAD**	**TERMINAL BLOCK (x 2)**	**OVERLOAD RANGE**	**MOTOR AMPS**
40	FXD63A150L 015-010089	3RT1054-6AF36 (115A) 001-008691	3RB2056-1FW2 001-010088	3RT1956-4G 001-008695	50 - 200	102.0
50	FXD63A250L 015-010090	3RT1055-6AF36 (150A) 001-008692	3RB2056-1FW2 001-010088	3RT1956-4G 001-008695	50 - 200	128.0
60	FXD63A250L 015-010090	3RT1056-6AF36 (185A) 001-010087	3RB2056-1FW2 001-010088	3RT1956-4G 001-008695	50 - 200	149.0

* ADDITIONAL AUX. CONTACT REQUIRED FOR LOAD STARTER ON ALL DRYERS AND UNLOAD ON STARTER WITH MOISTURELINK.

230V 1 Phase						
HP	**COMBINATION STARTER**	**TERM. BLOCK (FOR UL508 TYPE E)**	**OVERLOAD CONTACT**	***ADDITIONAL AUX. CONTACT**	**FLA RANGE**	**MOTOR AMPS**
1	3RA2120-1HA24-0AK6 001-010081	3RV2928-1H 001-010079	3RV2901-1A 001-010078	3RH2921-1DA11 001-010080	5.5 - 8	5.9
2	3RA2120-1KA24-0AK6 001-010082	3RV2928-1H 001-010079	3RV2901-1A 001-010078	3RH2921-1DA11 001-010080	9 - 12.5	11.5
3	3RA2120-4AA26-0AK6 001-010083	3RV2928-1H 001-010079	3RV2901-1A 001-010078	3RH2921-1DA11 001-010080	11 - 16	14.0
5	3RA2120-4CA27-0AK6 001-010084	3RV2928-1H 001-010079	3RV2901-1A 001-010078	3RH2921-1DA11 001-010080	17 - 22	19.1
7.5	3RA1135-4FB35-1AK6 001-010067	NA	INCL.	3RH1921-1EA11 001-010086	28 – 40	29.0
10	3RA1135-4GB36-1AK6 001-010068	NA	INCL.	3RH1921-1EA11 001-010086	36 - 45	38.0
15	3RA1145-4KB45-1AK6 001-010071	3RT1946-4GA07 001-010075	3RV1901-1A 001-010137	3RH1921-1EA11 001-010086	57 - 75	60.0

* ADDITIONAL AUX. CONTACT REQUIRED FOR LOAD STARTER ON ALL DRYERS AND UNLOAD ON STARTER WITH MOISTURELINK.

FAN PITCH SETTINGS - ALL MODELS
GREENHECK FANS

60Hz 1750 RPM
230V-1P; 208V-3P; 240V-3P; 480V-3P; 575V-3P

MODEL		FAN HP	FAN DIA.	FAN PITCH (DEG.)
MSF-31010	10FT	10	38”	**5**
MSF-41515	10FT	15	38”	**10**
MSF-62520	15FT	20	38”	**12**
MSF-72525	15FT	25	38”	**16**
DP 2510	10FT	10	38”	**3 1/2**
DP 3015 (1P)	10FT	15	38”	**8**
DP 4020	15FT	10	38”	**3 1/2**
DP 5020	20FT	10	38”	**3 1/2**
DP 7530	30FT	10	38”	**3 1/2**
DP 10040	40FT	10	38”	**3 1/2**
DP 3015 (3P)	10FT	15	38”	**8**
DP 4025	15FT	25	38”	**14**
DP 6030	20FT	15	38”	**8**
DP 7550	25FT	25	38”	**14**
DP 9045	30FT	15	38”	**8**
DP 12060	40FT	15	38”	**8**
DPSL 3520	10FT	20	38”	**10**
DPSL 4530	15FT	30	38”	**16**
DPSL 7040	20FT	20	38”	**10**
DPSL 8560	25FT	30	38”	**16**
DPSL 10560	30FT	20	38”	**10**
DPSL 14080	40FT	20	38”	**10**
DPX 4525	10FT	25	38”	**14**
DPX 7040	15FT	20	38”	**10**
DPX 9050	20FT	25	38”	**14**
DPX 13575	30FT	25	38”	**14**
DPX 180100	40FT	25	38”	**14**

MODEL		FAN HP	FAN DIA.	FAN PITCH (DEG.)
DPXSL 5030	10FT	30	38”	**16**
DPXSL 8050	15FT	25	38”	**14**
DPXSL 10060	20FT	30	38”	**16**
DPXSL 12560	25FT	30	43”	**9**
DPXSL 15090	30FT	30	38”	**16**
DPXSL 200120	40FT	30	38”	**16**
DPX4T 5630	10FT	30	43”	**9**
DPX4T 8460	15FT	60	43”	**21**
DPX4T 11260	20FT	30	43”	**9**
DPX4T 140100	25FT	50	43”	**16**
DPX4T 16890	30FT	30	43”	**9**
DPX4T 224120	40FT	30	43”	**9**
DPX8T 6440	10FT	40	43”	**13**
DPX8T 12880	20FT	40	43”	**13**
DPX8T 160120	25FT	60	43”	**21**
DPX8T 192120	30FT	40	43”	**13**
DPX8T 256160	40FT	40	43”	**13**
DPX12T 7250	10FT	50	43”	**16**
DPX12T 10860	15FT	30	43”	**9**
DPX12T 144100	20FT	50	43”	**16**
DPX12T 175120	25FT	60	43”	**21**
DPX12T 216150	30FT	50	43”	**16**
DPX12T 288200	40FT	50	43”	**16**
DPX16GT 8250	10FT	50	43”	**16**
DPX16GT 12360	15FT	30	43”	**9**
DPX16GT 164100	20FT	50	43”	**16**
DPX16GT 210120	25FT	60	43”	**21**
DPX16GT 246150	30FT	50	43”	**16**
DPX16GT 328200	40FT	50	43”	**16**

AIR AND HEAT SPECIFICATIONS

MODEL	FT	DRYING AIRFLOW CFM	NUMBER OF BURNERS	BTU - MILLION 210 OPERATING TEMP. AMBIENT TEMPERATURE					
				0°	10°	20°	40°	60°	70°
MSF-31010-CF	10	13435	1	3.05	2.90	2.76	2.47	2.18	2.03
MSF-31010-AB	10	13435	1	3.05	2.90	2.76	2.47	2.18	2.03
MSF-41515-CF	10	19150	1	4.34	4.14	3.93	3.52	3.10	2.90
MSF-41515-AB	10	19150	1	4.34	4.14	3.93	3.52	3.10	2.90
MSF-62520-CF	15	21863	1	4.96	4.72	4.49	4.01	3.54	3.31
MSF-62520-AB	15	21863	1	4.96	4.72	4.49	4.01	3.54	3.31
MSF-72525-CF	15	24804	1	5.63	5.36	5.09	4.55	4.02	3.75
MSF-72525-AB	15	24804	1	5.63	5.36	5.09	4.55	4.02	3.75
DP 2510 1P	10	10077	1	1.96	1.85	1.74	1.52	1.31	1.20
DP 3015 1P	10	14985	1	2.91	2.75	2.59	2.27	1.94	1.78
DP 4020 1P	15	20154	2	3.92	3.70	3.48	3.05	2.61	2.39
DP 5020 1P	20	20154	2	3.92	3.70	3.48	3.05	2.61	2.39
DP 7530 1P	30	30231	3	5.88	5.55	5.22	4.57	3.92	3.59
DP 10040 1P	40	40308	4	7.84	7.40	6.97	6.09	5.22	4.88
DP 3015 3P	10	14985	1	2.91	2.75	2.59	2.27	1.94	1.78
DP 4025 3P	15	20511	1	3.99	3.77	3.54	3.10	2.66	2.44
DP 6030 3P	20	29970	2	5.83	5.50	5.18	4.53	3.88	3.56
DP 7550 3P	25	41022	2	7.97	7.53	7.9	6.20	5.32	4.87
DP 9045 3P	30	44955	3	8.74	8.25	7.77	6.80	5.83	5.34
DP 12060 3P	40	59940	4	11.65	11.00	10.36	9.06	7.77	7.12
DP-SL 3520	10	17808	1	3.46	3.27	3.08	2.70	2.31	2.12
DP-SL 4530	15	22896	1	4.45	4.20	3.96	3.46	2.97	2.72
DP-SL 7040	20	35616	2	6.92	6.54	6.15	5.39	4.62	4.23
DP-SL 8560	25	45792	2	8.90	8.41	7.91	6.92	5.93	5.44
DP-SL 10560	30	53424	3	10.39	9.81	9.23	8.08	6.92	6.35
DP-SL 14080	40	71232	4	13.85	13.08	12.31	10.77	9.23	8.46
DPX 4525	10	20511	1	3.99	3.77	3.54	3.10	2.66	2.44
DPX 7040	15	35616	2	6.92	6.54	6.15	5.39	4.62	4.23
DPX 9050	20	41022	2	7.97	7.53	7.09	6.20	5.32	4.87
DPX 13575	30	61533	3	11.96	11.30	10.63	9.30	7.97	7.31
DPX 180100	40	82044	4	15.95	15.06	14.18	12.41	10.63	9.75

AIR AND HEAT SPECIFICATIONS

MODEL	FT	DRYING AIRFLOW CFM	NUMBER OF BURNERS	BTU - MILLION 210 OPERATING TEMP. AMBIENT TEMPERATURE					
				0°	10°	20°	40°	60°	70°
DPX-SL 5030	10	22896	1	4.45	4.20	3.96	3.46	2.97	2.72
DPX-SL 8050	15	41022	2	7.97	7.53	7.09	6.20	5.32	4.87
DPX-SL 10060	20	45792	2	8.90	8.41	7.91	6.92	5.93	5.44
DPX-SL 12560	25	57876	2	11.25	10.63	10.00	8.75	7.50	6.88
DPX-SL 15090	30	68688	3	13.35	12.61	11.87	10.39	8.90	8.16
DPX-SL 200120	40	91584	4	17.80	16.81	15.83	13.85	11.87	10.88
DPX4T 5630	10	28938	1	5.63	5.31	5.00	4.38	3.75	3.44
DPX4T 8460	15	44043	1	8.56	8.09	7.61	6.66	5.71	5.23
DPX4T 11260	20	57876	2	11.25	10.63	10.00	8.75	7.50	6.88
DPX4T 140100	25	79500	2	15.45	14.60	13.74	12.02	10.30	9.44
DPX4T 16890	30	86814	3	16.88	15.94	15.00	13.13	11.25	10.31
DPX4T 224120	40	115752	4	22.50	21.25	20.00	17.50	15.00	13.75
DPX8T 6440	10	34201	1	6.65	6.28	5.91	5.17	4.43	4.06
DPX8T 9660	15	N/A							
DPX8T 12880	20	68402	2	13.30	12.56	11.82	10.34	8.86	8.13
DPX8T 160120	25	88036	2	17.11	16.16	15.21	13.31	11.41	10.46
DPX8T 192120	30	102603	3	19.95	18.84	17.73	15.51	13.30	12.19
DPX8T 256160	40	136804	4	26.60	25.12	23.64	20.68	17.73	16.25
DPX12T 7250	10	39750	1	7.73	7.30	6.87	6.01	5.15	4.72
DPX12T 10860	15	57876	2	11.25	10.63	10.00	8.75	7.50	6.88
DPX12T 144100	20	79500	2	15.46	14.60	13.74	12.02	10.30	9.45
DPX12T 175120	25	88086	2	17.12	16.17	15.22	13.32	11.42	10.47
DPX12T 216150	30	119250	3	23.18	21.89	20.61	18.03	15.46	14.17
DPX12T 288200	40	159000	4	30.91	29.19	27.48	24.04	20.61	18.89
DPX16GT 8250	10	39750	1	7.73	7.30	6.87	6.01	5.15	4.72
DPX16GT 12360	15	57876	2	11.25	10.63	10.00	8.75	7.50	6.88
DPX16GT 164100	20	79500	2	15.46	14.60	13.74	12.02	10.30	9.45
DPX16GT 210120	25	88086	2	17.12	16.17	15.22	13.32	11.42	10.47
DPX16GT 246150	30	119250	3	23.18	21.89	20.61	18.03	15.46	14.17
DPX16GT 328200	40	159000	4	30.91	29.19	27.48	24.04	20.61	18.89

ORIFICE CHART

MODEL	DIA FAN	---NATURAL GAS--- PART NUMBER	DIA	-LIQUID PROPANE-- PART NUMBER	DIA	QTY
MSF-31010-CF	10FT 38"	100-003146	3/8	100-003145	9/32	1
MSF-31010-AB	10FT 38"	100-003146	3/8	100-003145	9/32	1
MSF-41515-CF	10FT 38"	100-003146	3/8	100-003145	9/32	1
MSF-41515-AB	10FT 38"	100-003146	3/8	100-003145	9/32	1
MSF-62520-CF	15FT 38"	100-006961	29/64	100-006953	5/16	1
MSF-62520-AB	15FT 38"	100-006961	29/64	100-006953	5/16	1
MSF-72525-CF	15FT 38"	100-006962	15/32	100-006955	11/32	1
MSF-72525-AB	15FT 38"	100-006962	15/32	100-006955	11/32	1
MSF2 5217 TOP	10FT 36"	100-006953	5/16	100-006961	29/64	1
MSF2 5217 BOT	10FT 30"	100-003145	9/32	100-003146	3/8	1
MSF2 7825 TOP	15FT 36"	100-003146	3/8	100-006963	31/64	1
MSF2 7825 BOT	15FT 30"	100-003145	9/32	100-003146	3/8	1
MSF2 10435 TOP	20FT 42"	100-006957	25/64	100-003808	1/2	1
MSF2 10435 BOT	20FT 30"	100-003146	3/8	100-006962	15/32	1
MSF2 13050 TOP	25FT 42"	100-006958	13/32	100-006964	33/64	1
MSF2 13050 BOT	25FT 30"	100-003146	3/8	100-006963	31/64	1
DP 2510	10FT 38"	100-003146	3/8	100-003145	9/32	1
DP 3015	10FT 38"	100-003146	3/8	100-003145	9/32	1
DP 4020	15FT 38"	100-003146	3/8	100-003145	9/32	2
DP 5020	20FT 38"	100-003146	3/8	100-003145	9/32	2
DP 7530	30FT 38"	100-003146	3/8	100-003145	9/32	3
DP 10040	40FT 38"	100-003146	3/8	100-003145	9/32	4
DP 3015	10FT 38"	100-003146	3/8	100-003145	9/32	1
DP 4025	15FT 38"	100-006962	15/32	100-006955	11/32	1
DP 6030	20FT 38"	100-003146	3/8	100-003145	9/32	2
DP 7550	25FT 38"	100-003146	3/8	100-003145	9/32	2
DP 9045	30FT 38"	100-003146	3/8	100-003145	9/32	3
DP 12060	40FT 38"	100-003146	3/8	100-003145	9/32	4
DPSL 3520	10FT 38"	100-006961	29/64	100-006953	5/16	1
DPSL 4530	15FT 38"	100-006963	31/64	100-006956	23/64	1
DPSL 7040	20FT 38"	100-006961	29/64	100-006953	5/16	2
DPSL 8560	25FT 38"	100-006961	29/64	100-006953	5/16	2
DPSL 10560	30FT 38"	100-006961	29/64	100-006953	5/16	3
DPSL 14080	40FT 38"	100-006961	29/64	100-006953	5/16	4

ORIFICE CHART

MODEL		DIA FAN	---NATURAL GAS--- PART NUMBER	DIA	-LIQUID PROPANE-- PART NUMBER	DIA	QTY
DPX	4525	10FT 38"	100-006962	15/32	100-006955	11/32	1
DPX	7040	15FT 38"	100-006961	29/64	100-006953	5/16	2
DPX	9050	20FT 38"	100-006962	15/32	100-006955	11/32	2
DPX	13575	30FT 38"	100-006962	15/32	100-006955	11/32	3
DPX	180100	40FT 38"	100-006962	15/32	100-006955	11/32	4
DPXSL	5030	10FT 38"	100-006963	31/64	100-006956	23/64	1
DPXSL	8050	15FT 38"	100-006962	15/32	100-006955	11/32	2
DPXSL	10060	20FT 38"	100-006963	31/64	100-006956	23/64	2
DPXSL	12560	25FT 43"	100-006963	31/64	100-006956	23/64	2
DPXSL	15090	30FT 38"	100-006963	31/64	100-006956	23/64	3
DPXSL	200120	40FT 38"	100-006963	31/64	100-006956	23/64	4
DPX4T	5630	10FT 43"	100-006963	31/64	100-003146	3/8	1
DPX4T	8460	15FT 43"	100-006962	15/32	100-006959	27/64	1
DPX4T	11260	20FT 43"	100-006963	31/64	100-003146	3/8	2
DPX4T	140100	25FT 43"	100-006963	31/64	100-003146	3/8	2
DPX4T	16890	30FT 43"	100-006963	31/64	100-003146	3/8	3
DPX4T	224120	40FT 43"	100-006963	31/64	100-003146	3/8	4
DPX8T	6440	10FT 43"	100-003808	1/2	100-006957	25/64	1
DPX8T	9660	15FT 43"	N/A	N/A	N/A	N/A	N/A
DPX8T	12880	20FT 43"	100-003808	1/2	100-006957	25/64	2
DPX8T	160120	25FT 43"	100-003808	1/2	100-006957	25/64	2
DPX8T	192120	30FT 43"	100-003808	1/2	100-006957	25/64	3
DPX8T	256160	40FT 43"	100-003808	1/2	100-006957	25/64	4
DPX12T	7250	10FT 43"	100-006964	33/64	100-006958	13/32	1
DPX12T	10860	15FT 43"	100-006963	31/64	100-003146	3/8	2
DPX12T	144100	20FT 43"	100-006964	33/64	100-006958	13/32	2
DPX12T	175120	25FT 43"	100-006964	33/64	100-006958	13/32	2
DPX12T	216150	30FT 43"	100-006964	33/64	100-006958	13/32	3
DPX12T	288200	40FT 43"	100-006964	33/64	100-006958	13/32	4
DPX16GT	8250	10FT 43"	100-006964	33/64	100-006958	13/32	1
DPX16GT	12360	15FT 43"	100-006963	31/64	100-003146	3/8	2
DPX16GT	164100	20FT 43"	100-006964	33/64	100-006958	13/32	2
DPX16GT	210120	25FT 43"	100-003809	33/64	100-006958	13/32	2
DPX16GT	246150	30FT 43"	100-006964	33/64	100-006958	13/32	3
DPX16GT	328200	40FT 43"	100-006964	33/64	100-006958	13/32	4

NOTE:

1. ORIFICE SIZE: OCCASIONALLY CONDITIONS MAY EXIST THAT REQUIRES ORIFICE SIZE TO BE MODIFIED ON EVERY MODEL.

ORIFICE PART NUMBERS

ORIFICE DIA	PART NUMBER	ORIFICE DIA	PART NUMBER
1/8 (.125)	031-002168	7/16 (.421)	100-006960
1/4 (.250)	100-006950	29/64 (.453)	100-006961
17/64 (.265)	100-006951	15/32 (.468)	100-006962
9/32 (.281)	100-003145	31/64 (.484)	100-006963
19/64 (.296)	100-006952	1/2 (.500)	100-003808
5/16 (.312)	100-006953	33/64 (.515)	100-006964
21/64 (.328)	100-006954	17/32 (.531)	100-006965
11/32 (.343)	100-006955	35/64 (.546)	100-006966
23/64 (.359)	100-006956	9/16 (.562)	100-006967
3/8 (.375)	100-003146	37/64 (.578)	100-006968
25/64 (.390)	100-006957	19/32 (.593)	100-006969
13/32 (.406)	100-006958	39/64 (.609)	100-006970
27/64 (.421)	100-006959	5/8 (.625)	100-003809

FUEL TRAIN W/MODULATING SYSTEM & ROUND FIN VAPORIZER PIPE SIZES

MODEL	FT	L.P. LIQUID VALVES & PIPE	L.P. VAPORIZER SIZES ROUND FIN	L.P. VAPOR REGULATOR, VALVES & PIPE	MANIFOLD SOLENOID VALVE & PIPE	MANIFOLD BUTTERFLY VALVE
MSF-31010-CF	10	1/2	24 1/2"	1/2	1 1/4	1 1/4
MSF-31010-AB	10	1/2	24 1/2"	1/2	1 1/4	1 1/4
MSF-41515-CF	10	1/2	24 1/2"	1/2	1 1/4	1 1/4
MSF-41515-AB	10	1/2	24 1/2"	1/2	1 1/4	1 1/4
MSF-62520-CF	15	1/2	24 1/2"	1/2	1 1/4	1 1/4
MSF-62520-AB	15	1/2	24 1/2"	1/2	1 1/4	1 1/4
MSF-72525-CF	15	1/2	24 1/2"	1/2	1 1/4	1 1/4
MSF-72525-AB	15	1/2	24 1/2"	1/2	1 1/4	1 1/4
DP 2510	10	1/2	4R	1/2	1 1/4	1 1/4
DP 3015	10	1/2	4R	1/2	1 1/4	1 1/4
DP 4020	15	1/2	8R	1/2	1 1/4	1 1/4
DP 5020	20	1/2	8R	1/2	1 1/4	1 1/4
DP 7530	30	1/2	12R	1/2	1 1/4	1 1/4
DP 10040	40	3/4	8R/8R	2	2	2
DP 3015	10	1/2	4R	1/2	1 1/4	1 1/4
DP 4025	15	1/2	8R	1/2	1 1/4	1 1/4
DP 6030	20	1/2	8R	1/2	1 1/4	1 1/4
DP 7550	25	1/2	12R	1/2	1 1/4	1 1/4
DP 9045	30	1/2	12R	1/2	1 1/4	1 1/4
DP 12060	40	3/4	8R/8R	2	2	2
DPSL 3520	10	1/2	4R	1/2	1 1/4	1 1/4
DPSL 4530	15	1/2	8R	1/2	1 1/4	1 1/4
DPSL 7040	20	1/2	8R	1/2	1 1/4	1 1/4
DPSL 8560	25	1/2	12R	1/2	1 1/4	1 1/4
DPSL 10560	30	1/2	12R	1/2	1 1/4	1 1/4
DPSL 14080	40	3/4	8R/8R	2	2	2

FUEL TRAIN W/MODULATING SYSTEM & ROUND FIN VAPORIZER PIPE SIZES

MODEL	FT	L.P. LIQUID VALVES & PIPE	L.P. VAPORIZER SIZES ROUND FIN	L.P. VAPOR REGULATOR, VALVES & PIPE	MANIFOLD SOLENOID VALVE & PIPE	MANIFOLD BUTTERFLY VALVE
DPX 4525	10	1/2	8R	1/2	1 1/4	1 1/4
DPX 7040	15	1/2	12R	1/2	1 1/4	1 1/4
DPX 9050	20	1/2	12R	1/2	1 1/4	1 1/4
DPX 13575	30	3/4	8R/8R	2	2	2
DPX 180100	40	3/4	12R/12R	2	2	2
DPXSL 5030	10	1/2	8R	1/2	1 1/4	1 1/4
DPXSL 8050	15	1/2	12R	1/2	1 1/4	1 1/4
DPXSL 10060	20	1/2	12R	1/2	1 1/4	1 1/4
DPXSL 12560	25	3/4	8R/8R	2	2	2
DPXSL 15090	30	3/4	8R/8R	2	2	2
DPXSL 200120	40	3/4	12R/12R	2	2	2
DPX4T 5630	10	1/2	8R	1/2	1 1/4	1 1/4
DPX4T 8460	15	1/2	12R	1/2	1 1/4	1 1/4
DPX4T 11260	20	3/4	8R/8R	2	2	2
DPX4T 140100	25	3/4	8R/12R	2	2	2
DPX4T 16890	30	3/4	8R/12R	2	2	2
DPX4T 224120	40	3/4	8R/8R/12R	2	2	2
DPX8T 6440	10	1/2	8R	1/2	1 1/4	1 1/4
DPX8T 9660	15	N/A	-	-	-	-
DPX8T 12880	20	3/4	8R/8R	2	2	2
DPX8T 160120	25	3/4	8R/12R	2	2	2
DPX8T 192120	30	3/4	12R/12R	2	2	2
DPX8T 256160	40	3/4	8R/12R/12R	2	2	2
DPX12T 7250	10	1/2	12R	1/2	1 1/4	1 1/4
DPX12T 10860	15	3/4	8R/8R	2	2	2
DPX12T 144100	20	3/4	8R/12R	2	2	2
DPX12T 175120	25	3/4	8R/12R	2	2	2
DPX12T 216150	30	3/4	8R/8R/12R	2	2	2
DPX12T 288200	40	3/4	12R/12R/12R	2	2	2
DPX16GT 8250	10	1/2	12R	1/2	1 1/4	1 1/4
DPX16GT 12360	15	3/4	8R/8R	2	2	2
DPX16GT 164100	20	3/4	8R/12R	2	2	2
DPX16GT 210120	25	3/4	8R/12R	2	2	2
DPX16GT 246150	30	3/4	8R/8R/12R	2	2	2
DPX16GT 328200	40	3/4	12R/12R/12R	2	2	2

STANDARD DISCHARGE SYSTEM

(FOR *LEESON/OHIO GEAR* GEAR REDUCERS)
ALL MOTORS – 230V-1P – 240V-3P - 480V-3P

MODEL	FT	TYPE	MOTOR	MOTOR PART NUMBER	GEAR REDUCER	GEAR REDUCER PART NUMBER
MSF-31010-CF 1P	10	AUGER-8"	1HP-1750RPM-60HZ-115/230V-1P 143TC- 7/8-CLASS B	004-006471	5:1 140TC-7/8	052-008861
MSF-31010-AB 1P	10	AUGER-8"	1HP-1750RPM-60HZ-115/230V-1P 143TC- 7/8-CLASS B	004-006471	5:1 140TC-7/8	052-008861
MSF-41515-CF 1P	10	AUGER-8"	1HP-1750RPM-60HZ-115/230V-1P 143TC- 7/8-CLASS B	004-006471	5:1 140TC-7/8	052-008861
MSF-41515-AB 1P	10	AUGER-8"	1HP-1750RPM-60HZ-115/230V-1P 143TC- 7/8-CLASS B	004-006471	5:1 140TC-7/8	052-008861
MSF-41515-CF	10	AUGER-8"	1HP-1750RPM-60HZ-240/480V-3P 143TC- 7/8-CLASS B	004-005415	5:1 140TC-7/8	052-008861
MSF-41515-AB	10	AUGER-8"	1HP-1750RPM-60HZ-240/480V-3P 143TC- 7/8-CLASS B	004-005415	5:1 140TC-7/8	052-008861
MSF-62520-CF	15	AUGER-8"	1HP-1750RPM-60HZ-240/480V-3P 143TC- 7/8-CLASS B	004-005415	5:1 140TC-7/8	052-008861
MSF-62520-AB	15	AUGER-8"	1HP-1750RPM-60HZ-240/480V-3P 143TC- 7/8-CLASS B	004-005415	5:1 140TC-7/8	052-008861
MSF-72525-CF	15	AUGER-8"	1HP-1750RPM-60HZ-240/480V-3P 143TC- 7/8-CLASS B	004-005415	5:1 140TC-7/8	052-008861
MSF-72525-AB	15	AUGER-8"	1HP-1750RPM-60HZ-240/480V-3P 143TC- 7/8-CLASS B	004-005415	5:1 140TC-7/8	052-008861
DP 2510 1P	10	AUGER-8"	DRIVES FROM DC			
DP 3015 1P	10	AUGER-8"	DRIVES FROM DC			
DP 4020 1P	15	AUGER-8"	1HP-1750RPM-60HZ-115/230V-1P 143TC- 7/8-CLASS B	004-006471	5:1 140TC-7/8	052-008861
DP 5020 1P	20	AUGER-8"	1HP-1750RPM-60HZ-115/230V-1P 143TC- 7/8-CLASS B	004-006471	5:1 140TC-7/8	052-008861
DP 7530 1P	30	AUGER-8"	2HP-1750RPM-60HZ-115/230V-1P 182TC- 7/8-CLASS B	004-007896	5:1 180TC-1 1/8	052-008862
DP 10040 1P	40	AUGER-8"	3HP-1750RPM-60HZ- 230V-1P 184TC-1-1/8-CLASS B	004-006473	5:1 180TC-1 1/8	052-008862
DP 3015	10	AUGER-8"	DRIVES FROM DC			
DP 4025	15	AUGER-8"	1HP-1750RPM-60HZ-240/480V-3P 143TC- 7/8-CLASS B	004-005415	5:1 140TC-7/8	052-008861
DP 6030	20	AUGER-8"	1HP-1750RPM-60HZ-240/480V-3P 143TC- 7/8-CLASS B	004-005415	5:1 140TC-7/8	052-008861
DP 7550	25	AUGER-8"	2HP-1750RPM-60HZ-240/480V-3P 145TC- 7/8-CLASS B	004-005416	5:1 140TC-7/8	052-008861
DP 9045	30	AUGER-8"	2HP-1750RPM-60HZ-240/480V-3P 145TC- 7/8-CLASS B	004-005416	5:1 140TC-7/8	052-008861
DP 12060	40	AUGER-8"	3HP-1750RPM-60HZ-240/480V-3P 182TC-1-1/8-CLASS B	004-001980	5:1 180TC-1 1/8	052-008862
DP-SL 3520	10	AUGER-8"	DRIVES FROM DC			
DP-SL 4530	15	AUGER-8"	1HP-1750RPM-60HZ-240/480V-3P 143TC- 7/8-CLASS B	004-005415	5:1 140TC-7/8	052-008861
DP-SL 7040	20	AUGER-8"	1HP-1750RPM-60HZ-240/480V-3P 143TC- 7/8-CLASS B	004-005415	5:1 140TC-7/8	052-008861
DP-SL 8560	25	AUGER-8"	2HP-1750RPM-60HZ-240/480V-3P 145TC- 7/8-CLASS B	004-005416	5:1 140TC-7/8	052-008861
DP-SL 10560	30	AUGER-8"	2HP-1750RPM-60HZ-240/480V-3P 145TC- 7/8-CLASS B	004-005416	5:1 140TC-7/8	052-008861
DP-SL 14080	40	AUGER-8"	3HP-1750RPM-60HZ-240/480V-3P 182TC-1-1/8-CLASS B	004-001980	5:1 180TC-1 1/8	052-008862
DPX 4525	10	AUGER-8"	1HP-1750RPM-60HZ-240/480V-3P 143TC- 7/8-CLASS B	004-005415	5:1 140TC-7/8	052-008861
DPX 7040	15	AUGER-8"	1HP-1750RPM-60HZ-240/480V-3P 143TC- 7/8-CLASS B	004-005415	5:1 140TC-7/8	052-008861
DPX 9050	20	AUGER-8"	2HP-1750RPM-60HZ-240/480V-3P 145TC- 7/8-CLASS B	004-005416	5:1 140TC-7/8	052-008861
DPX 13575	30	AUGER-8"	3HP-1750RPM-60HZ-240/480V-3P 182TC-1-1/8-CLASS B	004-001980	5:1 180TC-1 1/8	052-008862
DPX 180100	40	DRAG-8"	3HP-1750RPM-60HZ-240/480V-3P 182TC-1-1/8-CLASS B	004-001980	20:1-180TC-1-1/4	052-008864

STANDARD DISCHARGE SYSTEM

(FOR *LEESON/OHIO GEAR* GEAR REDUCERS)
ALL MOTORS – 230V-1P – 240V-3P - 480V-3P

MODEL	FT	TYPE	MOTOR	MOTOR PART NUMBER	GEAR REDUCER	GEAR REDUCER PART NUMBER
DPX-SL 5030	10	AUGER-8"	1HP-1750RPM-60HZ-240/480V-3P 143TC- 7/8-CLASS B	004-005415	5:1 140TC-7/8	052-008861
DPX-SL 8050	15	AUGER-8"	1HP-1750RPM-60HZ-240/480V-3P 143TC- 7/8-CLASS B	004-005415	5:1 140TC-7/8	052-008861
DPX-SL 10060	20	AUGER-8"	2HP-1750RPM-60HZ-240/480V-3P 145TC- 7/8-CLASS B	004-005416	5:1 140TC-7/8	052-008861
DPX-SL 12560	25	AUGER-8"	3HP-1750RPM-60HZ-240/480V-3P 182TC-1-1/8-CLASS B	004-001980	5:1 180TC-1 1/8	052-008862
DPX-SL 15090	30	AUGER-8"	3HP-1750RPM-60HZ-240/480V-3P 182TC-1-1/8-CLASS B	004-001980	5:1 180TC-1 1/4	052-008862
DPX-SL 200120	40	DRAG-8"	3HP-1750RPM-60HZ-240/480V-3P 182TC-1-1/8-CLASS B	004-001980	20:1-180TC-1-1/4	052-008864
DPX4T 5630	10	AUGER-8"	1HP-1750RPM-60HZ-240/480V-3P 143TC- 7/8-CLASS B	004-005415	5:1 140TC-7/8	052-008861
DPX4T 8460	15	AUGER-8"	2HP-1750RPM-60HZ-240/480V-3P 145TC- 7/8-CLASS B	004-005416	5:1 140TC-7/8	052-008861
DPX4T 11260	20	AUGER-8"	2HP-1750RPM-60HZ-240/480V-3P 145TC- 7/8-CLASS B	004-005416	5:1 140TC-7/8	052-008861
DPX4T 140100	25	AUGER-8"	3HP-1750RPM-60HZ-240/480V-3P 182TC-1-1/8-CLASS B	004-001980	5:1 180TC-1 1/8	052-008862
DPX4T 16890	30	DRAG-8"	3HP-1750RPM-60HZ-240/480V-3P 182TC-1-1/8-CLASS B	004-001980	20:1-180TC-1-1/4	052-008864
DPX4T 224120	40	DRAG-8"	3HP-1750RPM-60HZ-240/480V-3P 182TC-1-1/8-CLASS B	004-001980	15:1 180TC-1 1/8	052-008865
DPX8T 6440	10	AUGER-8"	1HP-1750RPM-60HZ-240/480V-3P 143TC- 7/8-CLASS B	004-005415	5:1 140TC-7/8	052-008861
DPX8T 12880	20	AUGER-8"	2HP-1750RPM-60HZ-240/480V-3P 145TC- 7/8-CLASS B	004-005416	5:1 140TC-7/8	052-008861
DPX8T 160120	25	DRAG-8"	3HP-1750RPM-60HZ-240/480V-3P 182TC-1-1/8-CLASS B	004-001980	20:1-180TC-1-1/4	052-008864
DPX8T 192120	30	DRAG-8"	3HP-1750RPM-60HZ-240/480V-3P 182TC-1-1/8-CLASS B	004-001980	20:1-180TC-1-1/4	052-008864
DPX8T 256160	40	DRAG-8"	3HP-1750RPM-60HZ-240/480V-3P 182TC-1-1/8-CLASS B	004-001980	15:1 180TC-1 1/8	052-008865
DPX12T 7250	10	AUGER-8"	1HP-1750RPM-60HZ-240/480V-3P 143TC- 7/8-CLASS B	004-005415	5:1 140TC-7/8	052-008861
DPX12T 10860	15	AUGER-8"	2HP-1750RPM-60HZ-240/480V-3P 145TC- 7/8-CLASS B	004-005416	5:1 140TC-7/8	052-008861
DPX12T 144100	20	AUGER-8"	2HP-1750RPM-60HZ-240/480V-3P 145TC- 7/8-CLASS B	004-005416	5:1 140TC-7/8	052-008861
DPX12T 175120	25	DRAG-8"	3HP-1750RPM-60HZ-240/480V-3P 182TC-1-1/8-CLASS B	004-001980	20:1-180TC-1-1/4	052-008864
DPX12T 216150	30	DRAG-8"	3HP-1750RPM-60HZ-240/480V-3P 182TC-1-1/8-CLASS B	004-001980	15:1 180TC-1 1/8	052-008865
DPX12T 288200	40	DRAG-8"	5HP-1750RPM-60HZ-240/480V-3P 184TC-1-1/8-CLASS B	004-001982	30:1 180TC-1-7/8	052-008866
DPX16GT 8250	10	AUGER-8"	1HP-1750RPM-60HZ-240/480V-3P 143TC- 7/8-CLASS B	004-005415	5:1 140TC-7/8	052-008861
DPX16GT 12360	15	AUGER-8"	2HP-1750RPM-60HZ-240/480V-3P 145TC- 7/8-CLASS B	004-005416	5:1 140TC-7/8	052-008861
DPX16GT 164100	20	DRAG-8"	3HP-1750RPM-60HZ-240/480V-3P 182TC-1-1/8-CLASS B	004-001980	20:1-180TC-1-1/4	052-008864
DPX16GT 210120	25	DRAG-8"	3HP-1750RPM-60HZ-240/480V-3P 182TC-1-1/8-CLASS B	004-001980	20:1-180TC-1-1/4	052-008864
DPX16GT 246150	30	DRAG-8"	3HP-1750RPM-60HZ-240/480V-3P 182TC-1-1/8-CLASS B	004-001980	15:1 180TC-1 1/8	052-008865
DPX16GT 328200	40	DRAG-8"	5HP-1750RPM-60HZ-240/480V-3P 184TC-1-1/8-CLASS B	004-001982	30:1 180TC-1-7/8	052-008866

NOTE: 1. ALL MOTORS SHOWN 240V/480V-3P UNLESS STATED (1P) INDICATING 230V-1P

2. DRAG CAPACITIES @ 5 POINTS
   30:1 UP TO 1200 BU/HR DRYER MAX. 2310 BU 2HP (DRAG 8″ WIDE X 10″ HIGH)
   20:1 UP TO 1900 BU/HR DRYER MAX. 3465 BU 3HP (DRAG 8″ WIDE X 10″ HIGH)
   15:1 UP TO 2560 BU HR DRYER MAX. 4620 BU 3HP (DRAG 8″ WIDE X 10″ HIGH
   30:1 UP TO 2880 BU/HR DRYER MAX. 5355 BU 5HP (DRAG 8″ WIDE X 14″ HIGH) - DPX12T/16GT ONLY

3. WHEN ORDERING GEAR REDUCERS STATE: BRAND – RATIO - FRAME - SHAFT DIAMETER.

STANDARD DISCHARGE SYSTEM

(FOR *LEESON/OHIO GEAR* GEAR REDUCERS)

ALL MOTORS – 380V-3P

MODEL	FT	TYPE	MOTOR	MOTOR PART NUMBER	GEAR REDUCER	GEAR REDUCER PART NUMBER
MSF-41515-CF	10	AUGER-8"	1HP-1450RPM-50HZ- 380V-3P 143TC- 7/8-CLASS B	004-007865	5:1 140TC-7/8	052-008861
MSF-41515-AB	10	AUGER-8"	1HP-1450RPM-50HZ- 380V-3P 143TC- 7/8-CLASS B	004-007865	5:1 140TC-7/8	052-008861
MSF-62520-CF	15	AUGER-8"	1HP-1450RPM-50HZ- 380V-3P 143TC- 7/8-CLASS B	004-007865	5:1 140TC-7/8	052-008861
MSF-62520-AB	15	AUGER-8"	1HP-1450RPM-50HZ- 380V-3P 143TC- 7/8-CLASS B	004-007865	5:1 140TC-7/8	052-008861
MSF-72525-CF	15	AUGER-8"	1HP-1450RPM-50HZ- 380V-3P 143TC- 7/8-CLASS B	004-007865	5:1 140TC-7/8	052-008861
MSF-72525-AB	15	AUGER-8"	1HP-1450RPM-50HZ- 380V-3P 143TC- 7/8-CLASS B	004-007865	5:1 140TC-7/8	052-008861
DP 3015	10	AUGER-8"	DRIVES FROM DC			
DP 4025	15	AUGER-8"	1HP-1450RPM-50HZ- 380V-3P 143TC- 7/8-CLASS B	004-007865	5:1 140TC-7/8	052-008861
DP 6030	20	AUGER-8"	1HP-1450RPM-50HZ- 380V-3P 143TC- 7/8-CLASS B	004-007865	5:1 140TC-7/8	052-008861
DP 7550	25	AUGER-8"	2HP-1450RPM-50HZ- 380V-3P 145TC- 7/8-CLASS B	004-007866	5:1 140TC-7/8	052-008861
DP 9045	30	AUGER-8"	2HP-1450RPM-50HZ- 380V-3P 145TC- 7/8-CLASS B	004-007866	5:1 140TC-7/8	052-008861
DP 12060	40	AUGER-8"	3HP-1450RPM-50HZ- 380V-3P 182TC-1-1/8-CLASS B	004-007867	5:1 180TC-1 1/8	052-008862
DP-SL 3520	10	AUGER-8"	DRIVES FROM DC			
DP-SL 4530	15	AUGER-8"	1HP-1450RPM-50HZ- 380V-3P 143TC- 7/8-CLASS B	004-007865	5:1 140TC-7/8	052-008861
DP-SL 7040	20	AUGER-8"	1HP-1450RPM-50HZ- 380V-3P 143TC- 7/8-CLASS B	004-007865	5:1 140TC-7/8	052-008861
DP-SL 8560	25	AUGER-8"	2HP-1450RPM-50HZ- 380V-3P 145TC- 7/8-CLASS B	004-007866	5:1 140TC-7/8	052-008861
DP-SL 10560	30	AUGER-8"	2HP-1450RPM-50HZ- 380V-3P 145TC- 7/8-CLASS B	004-007866	5:1 140TC-7/8	052-008861
DP-SL 14080	40	AUGER-8"	3HP-1450RPM-50HZ- 380V-3P 182TC-1-1/8-CLASS B	004-007867	5:1 180TC-1 1/8	052-008862
DPX 4525	10	AUGER-8"	1HP-1450RPM-50HZ- 380V-3P 143TC- 7/8-CLASS B	004-007865	5:1 140TC-7/8	052-008861
DPX 7040	15	AUGER-8"	1HP-1450RPM-50HZ- 380V-3P 143TC- 7/8-CLASS B	004-007865	5:1 140TC-7/8	052-008861
DPX 9050	20	AUGER-8"	2HP-1450RPM-50HZ- 380V-3P 145TC- 7/8-CLASS B	004-007866	5:1 140TC-7/8	052-008861
DPX 13575	30	AUGER-8"	3HP-1450RPM-50HZ- 380V-3P 182TC-1-1/8-CLASS B	004-007867	5:1 180TC-1 1/8	052-008862
DPX 180100	40	DRAG-8"	3HP-1450RPM-50HZ- 380V-3P 182TC-1-1/8-CLASS B	004-007867	20:1-180TC-1-1/4	052-008864
DPX-SL 5030	10	AUGER-8"	1HP-1450RPM-50HZ- 380V-3P 143TC- 7/8-CLASS B	004-007865	5:1 140TC-7/8	052-008861
DPX-SL 8050	15	AUGER-8"	1HP-1450RPM-50HZ- 380V-3P 143TC- 7/8-CLASS B	004-007865	5:1 140TC-7/8	052-008861
DPX-SL 10060	20	AUGER-8"	2HP-1450RPM-50HZ- 380V-3P 145TC- 7/8-CLASS B	004-007866	5:1 140TC-7/8	052-008861
DPX-SL 12560	25	AUGER-8"	3HP-1450RPM-50HZ- 380V-3P 182TC-1-1/8-CLASS B	004-007867	5:1 180TC-1 1/8	052-008862
DPX-SL 15090	30	AUGER-8"	3HP-1450RPM-50HZ- 380V-3P 182TC-1-1/8-CLASS B	004-007867	5:1 180TC-1 1/8	052-008862
DPX-SL 200120	40	DRAG-8"	3HP-1450RPM-50HZ- 380V-3P 182TC-1-1/8-CLASS B	004-007867	20:1-180TC-1-1/4	052-008864

STANDARD DISCHARGE SYSTEM

(FOR *LEESON/OHIO GEAR* GEAR REDUCERS)

ALL MOTORS – 380V-3P

MODEL	FT	TYPE	MOTOR	MOTOR PART NUMBER	GEAR REDUCER	GEAR REDUCER PART NUMBER
DPX4T 5630	10	AUGER-8"	1HP-1450RPM-50HZ- 380V-3P 143TC- 7/8-CLASS B	004-007865	5:1 140TC-7/8	052-008861
DPX4T 8460	15	AUGER-8"	2HP-1450RPM-50HZ- 380V-3P 145TC- 7/8-CLASS B	004-007866	5:1 140TC-7/8	052-008861
DPX4T 11260	20	AUGER-8"	2HP-1450RPM-50HZ- 380V-3P 145TC- 7/8-CLASS B	004-007866	5:1 140TC-7/8	052-008861
DPX4T 140100	25	AUGER-8"	3HP-1450RPM-50HZ- 380V-3P 182TC-1-1/8-CLASS B	004-007867	5:1 180TC-1 1/8	052-008862
DPX4T 16890	30	DRAG-8"	3HP-1450RPM-50HZ- 380V-3P 182TC-1-1/8-CLASS B	004-007867	20:1-180TC-1-1/4	052-008864
DPX4T 224120	40	DRAG-8"	3HP-1450RPM-50HZ- 380V-3P 182TC-1-1/8-CLASS B	004-007867	15:1 180TC-1 1/8	052-008865
DPX8T 6440	10	AUGER-8"	1HP-1450RPM-50HZ- 380V-3P 143TC- 7/8-CLASS B	004-007865	5:1 140TC-7/8	052-008861
DPX8T 9660	15	N/A				
DPX8T 12880	20	AUGER-8"	2HP-1450RPM-50HZ- 380V-3P 145TC- 7/8-CLASS B	004-007866	5:1 140TC-7/8	052-008861
DPX8T 160120	25	DRAG-8"	3HP-1450RPM-50HZ- 380V-3P 182TC-1-1/8-CLASS B	004-007867	20:1-180TC-1-1/4	052-008864
DPX8T 192120	30	DRAG-8"	3HP-1450RPM-50HZ- 380V-3P 182TC-1-1/8-CLASS B	004-007867	20:1-180TC-1-1/4	052-008864
DPX8T 256160	40	DRAG-8"	3HP-1450RPM-50HZ- 380V-3P 182TC-1-1/8-CLASS B	004-007867	15:1 180TC-1 1/8	052-008865
DPX12T 7250	10	AUGER-8"	1HP-1450RPM-50HZ- 380V-3P 143TC- 7/8-CLASS B	004-007865	5:1 140TC-7/8	052-008861
DPX12T 10860	15	AUGER-8"	2HP-1450RPM-50HZ- 380V-3P 145TC- 7/8-CLASS B	004-007866	5:1 140TC-7/8	052-008861
DPX12T 144100	20	AUGER-8"	2HP-1450RPM-50HZ- 380V-3P 145TC- 7/8-CLASS B	004-007866	5:1 140TC-7/8	052-008861
DPX12T 175120	25	DRAG-8"	3HP-1450RPM-50HZ- 380V-3P 182TC-1-1/8-CLASS B	004-007867	20:1-180TC-1-1/4	052-008864
DPX12T 216150	30	DRAG-8"	3HP-1450RPM-50HZ- 380V-3P 182TC-1-1/8-CLASS B	004-007867	15:1 180TC-1 1/8	052-008865
DPX12T 288200	40	DRAG-8"	5HP-1450RPM-50HZ- 380V-3P 184TC-1-1/8-CLASS B	004-007868	30:1 180TC-1-7/8	052-008866
DPX16GT 8250	10	AUGER-8"	1HP-1450RPM-50HZ- 380V-3P 143TC- 7/8-CLASS B	004-007865	5:1 140TC-7/8	052-008861
DPX16GT 12360	15	AUGER-8"	2HP-1450RPM-50HZ- 380V-3P 145TC- 7/8-CLASS B	004-007866	5:1 140TC-7/8	052-008861
DPX16GT 164100	20	DRAG-8"	3HP-1450RPM-50HZ- 380V-3P 182TC-1-1/8-CLASS B	004-007867	20:1-180TC-1-1/4	052-008864
DPX16GT 210120	25	DRAG-8"	3HP-1450RPM-50HZ- 380V-3P 182TC-1-1/8-CLASS B	004-007867	20:1-180TC-1-1/4	052-008864
DPX16GT 246150	30	DRAG-8"	3HP-1450RPM-50HZ- 380V-3P 182TC-1-1/8-CLASS B	004-007867	15:1 180TC-1 1/8	052-008865
DPX16GT 328200	40	DRAG-8"	5HP-1450RPM-50HZ- 380V-3P 184TC-1-1/8-CLASS B	004-007868	30:1 180TC-1-7/8	052-008866

NOTE: 1. ALL MOTORS SHOWN 380V 3P (50HZ)

2. DRAG CAPACITIES @ 5 POINTS
   30:1 UP TO 1200 BU/HR DRYER MAX. 2310 BU 2HP (DRAG 8″ WIDE X 10″ HIGH)
   20:1 UP TO 1900 BU/HR DRYER MAX. 3465 BU 3HP (DRAG 8″ WIDE X 10″ HIGH)
   15:1 UP TO 2560 BU HR DRYER MAX. 4620 BU 3HP (DRAG 8″ WIDE X 10″ HIGH
   30:1 UP TO 2880 BU/HR DRYER MAX. 5355 BU 5HP (DRAG 8″ WIDE X 14″ HIGH) - DPX12T/16GT ONLY

3. WHEN ORDERING GEAR REDUCERS STATE: BRAND – RATIO - FRAME - SHAFT DIAMETER.

STANDARD DISCHARGE SYSTEM

(FOR *LEESON/OHIO GEAR* GEAR REDUCERS)

ALL MOTORS – 575V-3P

MODEL	FT	TYPE	MOTOR	MOTOR PART NUMBER	GEAR REDUCER	GEAR REDUCER PART NUMBER
MSF-41515-CF	10	AUGER-8"	1HP-1750RPM-60HZ- 575V-3P 143TC- 7/8-CLASS B	004-007424	5:1 140TC-7/8	052-008861
MSF-41515-AB	10	AUGER-8"	1HP-1750RPM-60HZ- 575V-3P 143TC- 7/8-CLASS B	004-007424	5:1 140TC-7/8	052-008861
MSF-62520-CF	15	AUGER-8"	1HP-1750RPM-60HZ- 575V-3P 143TC- 7/8-CLASS B	004-007424	5:1 140TC-7/8	052-008861
MSF-62520-AB	15	AUGER-8"	1HP-1750RPM-60HZ- 575V-3P 143TC- 7/8-CLASS B	004-007424	5:1 140TC-7/8	052-008861
MSF-72525-CF	15	AUGER-8"	1HP-1750RPM-60HZ- 575V-3P 143TC- 7/8-CLASS B	004-007424	5:1 140TC-7/8	052-008861
MSF-72525-AB	15	AUGER-8"	1HP-1750RPM-60HZ- 575V-3P 143TC- 7/8-CLASS B	004-007424	5:1 140TC-7/8	052-008861
DP 3015	10	AUGER-8"	DRIVES FROM DC			
DP 4025	15	AUGER-8"	1HP-1750RPM-60HZ- 575V-3P 143TC- 7/8-CLASS B	004-007424	5:1 140TC-7/8	052-008861
DP 6030	20	AUGER-8"	1HP-1750RPM-60HZ- 575V-3P 143TC- 7/8-CLASS B	004-007424	5:1 140TC-7/8	052-008861
DP 7550	25	AUGER-8"	2HP-1750RPM-60HZ- 575V-3P 145TC- 7/8-CLASS B	004-007616	5:1 140TC-7/8	052-008861
DP 9045	30	AUGER-8"	2HP-1750RPM-60HZ- 575V-3P 145TC- 7/8-CLASS B	004-007616	5:1 140TC-7/8	052-008861
DP 12060	40	AUGER-8"	3HP-1750RPM-60HZ- 575V-3P 182TC-1-1/8-CLASS B	004-007571	5:1 180TC-1 1/8	052-008862
DP-SL 3520	10	AUGER-8"	DRIVES FROM DC			
DP-SL 4530	15	AUGER-8"	1HP-1750RPM-60HZ- 575V-3P 143TC- 7/8-CLASS B	004-007424	5:1 140TC-7/8	052-008861
DP-SL 7040	20	AUGER-8"	1HP-1750RPM-60HZ- 575V-3P 143TC- 7/8-CLASS B	004-007424	5:1 140TC-7/8	052-008861
DP-SL 8560	25	AUGER-8"	2HP-1750RPM-60HZ- 575V-3P 145TC- 7/8-CLASS B	004-007616	5:1 140TC-7/8	052-008861
DP-SL 10560	30	AUGER-8"	2HP-1750RPM-60HZ- 575V-3P 145TC- 7/8-CLASS B	004-007616	5:1 140TC-7/8	052-008861
DP-SL 14080	40	AUGER-8"	3HP-1750RPM-60HZ- 575V-3P 182TC-1-1/8-CLASS B	004-007571	5:1 180TC-1 1/8	052-008862
DPX 4525	10	AUGER-8"	1HP-1750RPM-60HZ- 575V-3P 143TC- 7/8-CLASS B	004-007424	5:1 140TC-7/8	052-008861
DPX 7040	15	AUGER-8"	1HP-1750RPM-60HZ- 575V-3P 143TC- 7/8-CLASS B	004-007424	5:1 140TC-7/8	052-008861
DPX 9050	20	AUGER-8"	2HP-1750RPM-60HZ- 575V-3P 145TC- 7/8-CLASS B	004-007616	5:1 140TC-7/8	052-008861
DPX 13575	30	AUGER-8"	3HP-1750RPM-60HZ- 575V-3P 182TC-1-1/8-CLASS B	004-007571	5:1 180TC-1 1/8	052-008862
DPX 180100	40	DRAG-8"	3HP-1750RPM-60HZ- 575V-3P 182TC-1-1/8-CLASS B	004-007571	20:1-180TC-1-1/4	052-008864
DPX-SL 5030	10	AUGER-8"	1HP-1750RPM-60HZ- 575V-3P 143TC- 7/8-CLASS B	004-007424	5:1 140TC-7/8	052-008861
DPX-SL 8050	15	AUGER-8"	1HP-1750RPM-60HZ- 575V-3P 143TC- 7/8-CLASS B	004-007424	5:1 140TC-7/8	052-008861
DPX-SL 10060	20	AUGER-8"	2HP-1750RPM-60HZ- 575V-3P 145TC- 7/8-CLASS B	004-007616	5:1 140TC-7/8	052-008861
DPX-SL 12560	25	AUGER-8"	3HP-1750RPM-60HZ- 575V-3P 182TC-1-1/8-CLASS B	004-007571	5:1 180TC-1 1/8	052-008862
DPX-SL 15090	30	AUGER-8"	3HP-1750RPM-60HZ- 575V-3P 182TC-1-1/8-CLASS B	004-007571	5:1 180TC-1 1/8	052-008862
DPX-SL 200120	40	DRAG-8"	3HP-1750RPM-60HZ- 575V-3P 182TC-1-1/8-CLASS B	004-007571	20:1-180TC-1-1/4	052-008864

STANDARD DISCHARGE SYSTEM
(FOR *LEESON/OHIO GEAR* GEAR REDUCERS)
ALL MOTORS – 575V-3P

MODEL	FT	TYPE	MOTOR	MOTOR PART NUMBER	GEAR REDUCER	GEAR REDUCER PART NUMBER
DPX4T 5630	10	AUGER-8"	1HP-1750RPM-60HZ- 575V-3P 143TC- 7/8-CLASS B	004-007424	5:1 140TC-7/8	052-008861
DPX4T 8460	15	AUGER-8"	2HP-1750RPM-60HZ- 575V-3P 145TC- 7/8-CLASS B	004-007616	5:1 140TC-7/8	052-008861
DPX4T 11260	20	AUGER-8"	2HP-1750RPM-60HZ- 575V-3P 145TC- 7/8-CLASS B	004-007616	5:1 140TC-7/8	052-008861
DPX4T 140100	25	AUGER-8"	3HP-1750RPM-60HZ- 575V-3P 182TC-1-1/8-CLASS B	004-007571	5:1 180TC-1 1/8	052-008862
DPX4T 16890	30	DRAG-8"	3HP-1750RPM-60HZ- 575V-3P 182TC-1-1/8-CLASS B	004-007571	20:1-180TC-1-1/4	052-008864
DPX4T 224120	40	DRAG-8"	3HP-1750RPM-60HZ- 575V-3P 182TC-1-1/8-CLASS B	004-007571	15:1 180TC-1 1/8	052-008865
DPX8T 6440	10	AUGER-8"	1HP-1750RPM-60HZ- 575V-3P 143TC- 7/8-CLASS B	004-007424	5:1 140TC-7/8	052-008861
DPX8T 9660	15	N/A				
DPX8T 12880	20	AUGER-8"	2HP-1750RPM-60HZ- 575V-3P 145TC- 7/8-CLASS B	004-007616	5:1 140TC-7/8	052-008861
DPX8T 160120	25	DRAG-8"	3HP-1750RPM-60HZ- 575V-3P 182TC-1-1/8-CLASS B	004-007571	20:1-180TC-1-1/4	052-008864
DPX8T 192120	30	DRAG-8"	3HP-1750RPM-60HZ- 575V-3P 182TC-1-1/8-CLASS B	004-007571	20:1-180TC-1-1/4	052-008864
DPX8T 256160	40	DRAG-8"	3HP-1750RPM-60HZ- 575V-3P 182TC-1-1/8-CLASS B	004-007571	15:1 180TC-1 1/8	052-008865
DPX12T 7250	10	AUGER-8"	1HP-1750RPM-60HZ- 575V-3P 143TC- 7/8-CLASS B	004-007424	5:1 140TC-7/8	052-008861
DPX12T 10860	15	AUGER-8"	2HP-1750RPM-60HZ- 575V-3P 145TC- 7/8-CLASS B	004-007616	5:1 140TC-7/8	052-008861
DPX12T 144100	20	AUGER-8"	2HP-1750RPM-60HZ- 575V-3P 145TC- 7/8-CLASS B	004-007616	5:1 140TC-7/8	052-008861
DPX12T 175120	25	DRAG-8"	3HP-1750RPM-60HZ- 575V-3P 182TC-1-1/8-CLASS B	004-007571	20:1-180TC-1-1/4	052-008864
DPX12T 216150	30	DRAG-8"	3HP-1750RPM-60HZ- 575V-3P 182TC-1-1/8-CLASS B	004-007571	15:1 180TC-1 1/8	052-008865
DPX12T 288200	40	DRAG-8"	5HP-1750RPM-60HZ- 575V-3P 184TC-1-1/8-CLASS B	004-007631	30:1 180TC-1-7/8	052-008866
DPX16GT 8250	10	AUGER-8"	1HP-1750RPM-60HZ- 575V-3P 143TC- 7/8-CLASS B	004-007424	5:1 140TC-7/8	052-008861
DPX16GT 12360	15	AUGER-8"	2HP-1750RPM-60HZ- 575V-3P 145TC- 7/8-CLASS B	004-007616	5:1 140TC-7/8	052-008861
DPX16GT 164100	20	DRAG-8"	3HP-1750RPM-60HZ- 575V-3P 182TC-1-1/8-CLASS B	004-007571	20:1-180TC-1-1/4	052-008864
DPX16GT 210120	25	DRAG-8"	3HP-1750RPM-60HZ- 575V-3P 182TC-1-1/8-CLASS B	004-007571	20:1-180TC-1-1/4	052-008864
DPX16GT 246150	30	DRAG-8"	3HP-1750RPM-60HZ- 575V-3P 182TC-1-1/8-CLASS B	004-007571	15:1 180TC-1 1/8	052-008865
DPX16GT 328200	40	DRAG-8"	5HP-1750RPM-60HZ- 575V-3P 184TC-1-1/8-CLASS B	004-007631	30:1 180TC-1-7/8	052-008866

NOTE: 1. ALL MOTORS SHOWN 575V 3P

2. DRAG CAPACITIES @ 5 POINTS
   30:1 UP TO 1200 BU/HR DRYER MAX. 2310 BU 2HP (DRAG 8″ WIDE X 10″ HIGH)
   20:1 UP TO 1900 BU/HR DRYER MAX. 3465 BU 3HP (DRAG 8″ WIDE X 10″ HIGH)
   15:1 UP TO 2560 BU HR DRYER MAX. 4620 BU 3HP (DRAG 8″ WIDE X 10″ HIGH
   30:1 UP TO 2880 BU/HR DRYER MAX. 5355 BU 5HP (DRAG 8″ WIDE X 14″ HIGH) - DPX12T/16GT ONLY

3. WHEN ORDERING GEAR REDUCERS STATE: BRAND – RATIO - FRAME - SHAFT DIAMETER.

SPROCKET CHART FOR 1 1/4″ AUGER SHAFTS

230V-1P – 240V-3P – 480V-3P - 575V-3P

MODEL	FT	METERING ROLLS	DC GEAR REDUCER	AUGER REDUCER	AUGER SHAFT
MSF 31010-CF 1P	10	4016-1	4012-1	4016-7/8	4016-1 1/4
MSF 31010-AB 1P	10	4016-1	4012-1	4016-7/8	4016-1 1/4
MSF 41515-CF 1P	10	4016-1	4012-1	4016-7/8	4016-1 1/4
MSF 41515-AB 1P	10	4016-1	4012-1	4016-7/8	4016-1 1/4
MSF 62520-CF	15	4016-1	4012-1	4016-7/8	4016-1 1/4
MSF 62520-AB	15	4016-1	4012-1	4016-7/8	4016-1 1/4
MSF 72525-CF	15	4016-1	4012-1	4016-7/8	4016-1 1/4
MSF 72525-AB	15	4016-1	4012-1	4016-7/8	4016-1 1/4
DP 2510 1P	10	4032-1	4012-1 & 4060-1	NONE	4015-1 1/4
DP 3015 1P	10	4032-1	4012-1 & 4060-1	NONE	4015-1 1/4
DP 4020 1P	15	4032-1	4012-1	4016-7/8	4024-1 1/4
DP 5020 1P	20	4032-1	4012-1	4016-7/8	4024-1 1/4
DP 7530 1P	30	4032-1	4012-1	4016-7/8	4016-1 1/4
DP 10040 1P	40	4032-1	4012-1	4024-1 1/8	4024-1 1/4
DP 3015	10	4032-1	4012-1 & 4060-1	NONE	4015-1 1/4
DP 4025	15	4032-1	4012-1	4016-7/8	4024-1 1/4
DP 6030	20	4032-1	4012-1	4016-7/8	4024-1 1/4
DP 7550	25	4032-1	4012-1	4016-7/8	4016-1 1/4
DP 9045	30	4032-1	4012-1	4016-7/8	4016-1 1/4
DP 12060	40	4032-1	4012-1	4024-1 1/8	4024-1 1/4
DPSL 3520	10	4032-1	4012-1 & 4060-1	NONE	4015-1 1/4
DPSL 4530	15	4032-1	4012-1	4016-7/8	4024-1 1/4
DPSL 7040	20	4032-1	4012-1	4016-7/8	4024-1 1/4
DPSL 8560	25	4032-1	4012-1	4016-7/8	4016-1 1/4
DPSL 10560	30	4032-1	4012-1	4016-7/8	4016-1 1/4
DPSL 14080	40	4032-1	4012-1	4024-1 1/8	4024-1 1/4

NOTE: 1.THE METERING IDLER SPROCKET 4017-1/2 IS THE SAME FOR ALL DRYERS.

2.REFER TO SPROCKET PAGE FOR PART NUMBERS.

SPROCKET CHART FOR 1 1/4" AUGER SHAFTS

230V-1P – 240V-3P – 480V-3P - 575V-3P

MODEL	FT	METERING ROLLS	DC GEAR REDUCER	AUGER REDUCER	AUGER SHAFT
DPX 4525	10	4032-1	4016-1	4016-7/8	4024-1 1/4
DPX 7040	15	4032-1	4016-1	4016-7/8	4024-1 1/4
DPX 9050	20	4032-1	4016-1	4016-7/8	4016-1 1/4
DPX 13575	30	4032-1	4016-1	4024-1 1/8	4024-1 1/4
DPX 180100	40	4032-1	4016-1	REFER TO DRAG CONVEYOR PARTS	
DPXSL 5030	10	4032-1	4016-1	4016-7/8	4024-1 1/4
DPXSL 8050	15	4032-1	4016-1	4016-7/8	4024-1 1/4
DPXSL 10060	20	4032-1	4016-1	4016-7/8	4016-1 1/4
DPXSL 12560	25	4032-1	4016-1	4024-1 1/8	4024-1 1/4
DPXSL 15090	30	4032-1	4016-1	4024-1 1/8	4024-1 1/4
DPXSL 200120	40	4032-1	4016-1	REFER TO DRAG CONVEYOR PARTS	
DPX4T 5630	10	4032-1	4024-1	4016-7/8	4024-1 1/4
DPX4T 8460	15	4032-1	4024-1	4016-7/8	4016-1 1/4
DPX4T 11260	20	4032-1	4024-1	4016-7/8	4016-1 1/4
DPX4T 140100	25	4032-1	4024-1	4024-1 1/8	4024-1 1/4
DPX4T 16890	30	4032-1	4024-1	REFER TO DRAG CONVEYOR PARTS	
DPX4T 224120	40	4032-1	4024-1	REFER TO DRAG CONVEYOR PARTS	
DPX8T 6440	10	4032-1	4024-1	4016-7/8	4024-1 1/4
DPX8T 9660	15	4032-1	4024-1	4016-7/8	4016-1 1/4
DPX8T 12880	20	4032-1	4024-1	4024-7/8	4024-1 1/4
DPX8T 160120	25	4032-1	4024-1	REFER TO DRAG CONVEYOR PARTS	
DPX8T 192120	30	4032-1	4024-1	REFER TO DRAG CONVEYOR PARTS	
DPX8T 256160	40	4032-1	4024-1	REFER TO DRAG CONVEYOR PARTS	
DPX12T 7250	10	4032-1	4026-1	4016-7/8	4016-1 1/4
DPX12T 10860	15	4032-1	4026-1	4016-7/8	4016-1 1/4
DPX12T 144100	20	4032-1	4026-1	4024-7/8	4024-1 1/4
DPX12T 175120	25	4032-1	4026-1	REFER TO DRAG CONVEYOR PARTS	
DPX12T 216150	30	4032-1	4026-1	REFER TO DRAG CONVEYOR PARTS	
DPX12T 288200	40	4032-1	4026-1	REFER TO DRAG CONVEYOR PARTS	
DPX16GT 8250	10	4032-1	4026-1	4016-7/8	4016-1 1/4
DPX16GT 12360	15	4032-1	4026-1	4016-7/8	4016-1 1/4
DPX16GT 164100	20	4032-1	4026-1	REFER TO DRAG CONVEYOR PARTS	
DPX16GT 210120	25	4032-1	4026-1	REFER TO DRAG CONVEYOR PARTS	
DPX16GT 246150	30	4032-1	4026-1	REFER TO DRAG CONVEYOR PARTS	
DPX16GT 328200	40	4032-1	4026-1	REFER TO DRAG CONVEYOR PARTS	

NOTE: 1. THE METERING IDLER SPROCKET 4017-1/2 IS THE SAME FOR ALL DRYERS.

2. REFER TO SPROCKET PAGE FOR PART NUMBERS.

SPROCKET CHART FOR 1 1/4" AUGER SHAFTS

380V-3P

MODEL	FT	METERING ROLLS	DC GEAR REDUCER	AUGER REDUCER	AUGER SHAFT
MSF 41515-CF	10	4016-1	4012-1	4020-7/8	4016-1 1/4
MSF 41515-AB	10	4016-1	4012-1	4020-7/8	4016-1 1/4
MSF 62520-CF	15	4016-1	4012-1	4020-7/8	4016-1 1/4
MSF 62520-AB	15	4016-1	4012-1	4020-7/8	4016-1 1/4
MSF 72525-CF	15	4016-1	4012-1	4020-7/8	4016-1 1/4
MSF 72525-AB	15	4016-1	4012-1	4020-7/8	4016-1 1/4
DP 3015	10	4032-1	4012-1 & 4060-1	NONE	4015-1 1/4
DP 4025	15	4032-1	4012-1	4016-7/8	4020-1 1/4
DP 6030	20	4032-1	4012-1	4016-7/8	4020-1 1/4
DP 7550	25	4032-1	4012-1	4020-7/8	4016-1 1/4
DP 9045	30	4032-1	4012-1	4020-7/8	4016-1 1/4
DP 12060	40	4032-1	4012-1	4024-1 1/8	4020-1 1/4
DPSL 3520	10	4032-1	4012-1 & 4060-1	NONE	4015-1 1/4
DPSL 4530	15	4032-1	4012-1	4016-7/8	4020-1 1/4
DPSL 7040	20	4032-1	4012-1	4016-7/8	4020-1 1/4
DPSL 8560	25	4032-1	4012-1	4020-7/8	4016-1 1/4
DPSL 10560	30	4032-1	4012-1	4020-7/8	4016-1 1/4
DPSL 14080	40	4032-1	4012-1	4024-1 1/8	4020-1 1/4
DPX 4525	10	4032-1	4016-1	4016-7/8	4020-1 1/4
DPX 7040	15	4032-1	4016-1	4016-7/8	4020-1 1/4
DPX 9050	20	4032-1	4016-1	4020-7/8	4016-1 1/4
DPX 13575	30	4032-1	4016-1	4024-1 1/8	4020-1 1/4
DPX 180100	40	4032-1	4016-1	REFER TO DRAG CONVEYOR PARTS	
DPXSL 5030	10	4032-1	4016-1	4016-7/8	4020-1 1/4
DPXSL 8050	15	4032-1	4016-1	4016-7/8	4020-1 1/4
DPXSL 10060	20	4032-1	4016-1	4020-7/8	4020-1 1/4
DPXSL 12560	25	4032-1	4016-1	4024-1 1/8	4020-1 1/4
DPXSL 15090	30	4032-1	4016-1	4024-1 1/8	4020-1 1/4
DPXSL 200120	40	4032-1	4016-1	REFER TO DRAG CONVEYOR PARTS	

NOTE: 1.THE METERING IDLER SPROCKET 4017-1/2 IS THE SAME FOR ALL DRYERS.

2.REFER TO SPROCKET PAGE FOR PART NUMBERS.

SPROCKET CHART FOR 1 1/4" AUGER SHAFTS

380V-3P

MODEL	FT	METERING ROLLS	DC GEAR REDUCER	AUGER REDUCER	AUGER SHAFT
DPX4T 5630	10	4032-1	4024-1	4016-7/8	4020-1 1/4
DPX4T 8460	15	4032-1	4024-1	4020-7/8	4016-1 1/4
DPX4T 11260	20	4032-1	4024-1	4020-7/8	4016-1 1/4
DPX4T 140100	25	4032-1	4024-1	4024-1 1/8	4020-1 1/4
DPX4T 16890	30	4032-1	4024-1	REFER TO DRAG CONVEYOR PARTS	
DPX4T 224120	40	4032-1	4024-1	REFER TO DRAG CONVEYOR PARTS	
DPX8T 6440	10	4032-1	4024-1	4016-7/8	4016-1 1/4
DPX8T 9660	15	4032-1	4024-1	4020-7/8	4016-1 1/4
DPX8T 12880	20	4032-1	4024-1	4020-7/8	4020-1 1/4
DPX8T 160120	25	4032-1	4024-1	REFER TO DRAG CONVEYOR PARTS	
DPX8T 192120	30	4032-1	4024-1	REFER TO DRAG CONVEYOR PARTS	
DPX8T 256160	40	4032-1	4024-1	REFER TO DRAG CONVEYOR PARTS	
DPX12T 7250	10	4032-1	4026-1	4016-7/8	4024-1 1/4
DPX12T 10860	15	4032-1	4026-1	4016-7/8	4024-1 1/4
DPX12T 144100	20	4032-1	4026-1	4016-7/8	4024-1 1/4
DPX12T 175120	25	4032-1	4026-1	REFER TO DRAG CONVEYOR PARTS	
DPX12T 216150	30	4032-1	4026-1	REFER TO DRAG CONVEYOR PARTS	
DPX12T 288200	40	4032-1	4026-1	REFER TO DRAG CONVEYOR PARTS	
DPX16GT 8250	10	4032-1	4026-1	4016-7/8	4024-1 1/4
DPX16GT 12360	15	4032-1	4026-1	4016-7/8	4024-1 1/4
DPX16GT 164100	20	4032-1	4026-1	REFER TO DRAG CONVEYOR PARTS	
DPX16GT 210120	25	4032-1	4026-1	REFER TO DRAG CONVEYOR PARTS	
DPX16GT 246150	30	4032-1	4026-1	REFER TO DRAG CONVEYOR PARTS	
DPX16GT 328200	40	4032-1	4026-1	REFER TO DRAG CONVEYOR PARTS	

NOTE: 1.THE METERING IDLER SPROCKET 4017-1/2 IS THE SAME FOR ALL DRYERS.

2.REFER TO SPROCKET PAGE FOR PART NUMBERS.

STANDARD LEVELING (AUGER) SYSTEM

ALL MOTORS – 230V-1P – 240V-3P - 480V-3P

MODEL	FT	TYPE	MOTOR DESCRIPTION	DELUX MOTOR P/N.
MSF 31010-CF 1P	10	AUGER-8″	1HP-1750RPM-60HZ-115/230V-1P-143T- 7/8-CLASS B	004-003236
MSF 31010-AB 1P	10	AUGER-8″	1HP-1750RPM-60HZ-115/230V-1P-143T- 7/8-CLASS B	004-003236
MSF 41515-CF 1P	10	AUGER-8″	1HP-1750RPM-60HZ-115/230V-1P-143T- 7/8-CLASS B	004-003236
MSF 41515-AB 1P	10	AUGER-8″	1HP-1750RPM-60HZ-115/230V-1P-143T- 7/8-CLASS B	004-003236
MSF 41515-CF	10	AUGER-8″	1HP-1750RPM-60HZ-240/480V-3P-143T- 7/8-CLASS B	004-002355
MSF 41515-AB	10	AUGER-8″	1HP-1750RPM-60HZ-240/480V-3P-143T- 7/8-CLASS B	004-002355
MSF 62520-CF	15	AUGER-8″	2HP-1750RPM-60HZ-240/480V-3P-145T- 7/8-CLASS B	004-002673
MSF 62520-AB	15	AUGER-8″	2HP-1750RPM-60HZ-240/480V-3P-145T- 7/8-CLASS B	004-002673
MSF 72525-CF	15	AUGER-8″	2HP-1750RPM-60HZ-240/480V-3P-145T- 7/8-CLASS B	004-002673
MSF 72525-AB	15	AUGER-8″	2HP-1750RPM-60HZ-240/480V-3P-145T- 7/8-CLASS B	004-002673
DP 2510 1P	10	AUGER-8″	1HP-1750RPM-60HZ-115/230V-3P-143T- 7/8-CLASS B	004-003236
DP 3015 1P	10	AUGER-8″	1HP-1750RPM-60HZ-115/230V-3P-143T- 7/8-CLASS B	004-003236
DP 4020 1P	15	AUGER-8″	2HP-1750RPM-60HZ-115/230V-1P-182T-1 1/8-CLASS B	004-007779
DP 5020 1P	20	AUGER-8″	2HP-1750RPM-60HZ-115/230V-1P-182T-1 1/8-CLASS B	004-007779
DP 7530 1P	30	AUGER-8″	3HP-1750RPM-60HZ- 230V-1P-184T-1 1/8-CLASS B	004-005417
DP 10040 1P	40	AUGER-8″	5HP-1750RPM-60HZ- 230V-1P-184T-1 1/8-CLASS B	004-004869
DP 3015	10	AUGER-8″	1HP-1750RPM-60HZ-240/480V-3P-143T- 7/8-CLASS B	004-002355
DP 4025	15	AUGER-8″	2HP-1750RPM-60HZ-240/480V-3P-145T- 7/8-CLASS B	004-002673
DP 6030	20	AUGER-8″	2HP-1750RPM-60HZ-240/480V-3P-145T- 7/8-CLASS B	004-002673
DP 7550	25	AUGER-8″	3HP-1750RPM-60HZ-240/480V-3P-182T-1 1/8-CLASS B	004-002671
DP 9045	30	AUGER-8″	3HP-1750RPM-60HZ-240/480V-3P-182T-1 1/8-CLASS B	004-002671
DP 12060	40	AUGER-8″	5HP-1750RPM-60HZ-240/480V-3P-184T-1 1/8-CLASS B	004-002672
DP-SL 3520	10	AUGER-8″	1HP-1750RPM-60HZ-240/480V-3P-143T- 7/8-CLASS B	004-002355
DP-SL 4530	15	AUGER-8″	2HP-1750RPM-60HZ-240/480V-3P-145T- 7/8-CLASS B	004-002673
DP-SL 7040	20	AUGER-8″	2HP-1750RPM-60HZ-240/480V-3P-145T- 7/8-CLASS B	004-002673
DP-SL 8560	25	AUGER-8″	3HP-1750RPM-60HZ-240/480V-3P-182T-1 1/8-CLASS B	004-002671
DP-SL 10560	30	AUGER-8″	3HP-1750RPM-60HZ-240/480V-3P-182T-1 1/8-CLASS B	004-002671
DP-SL 14080	40	AUGER-8″	5HP-1750RPM-60HZ-240/480V-3P-184T-1 1/8-CLASS B	004-002672

NOTE: 1. ALL MOTORS SHOWN 240V/480V-3P UNLESS STATED (1P) INDICATING 230V-1P.

STANDARD LEVELING (AUGER) SYSTEM

ALL MOTORS – 230V-1P – 240V-3P - 480V-3P

MODEL	FT	TYPE	MOTOR DESCRIPTION	DELUX MOTOR P/N.
DPX 4525	10	AUGER-8″	1HP-1750RPM-60HZ-240/480V-3P-143T- 7/8-CLASS B	004-002355
DPX 7040	15	AUGER-8″	2HP-1750RPM-60HZ-240/480V-3P-145T- 7/8-CLASS B	004-002673
DPX 9050	20	AUGER-8″	2HP-1750RPM-60HZ-240/480V-3P-145T- 7/8-CLASS B	004-002673
DPX 13575	30	AUGER-8″	3HP-1750RPM-60HZ-240/480V-3P-182T-1 1/8-CLASS B	004-002671
DPX 180100	40	AUGER-10″	10HP-1750RPM-60HZ-240/480V-3P-215T-1 3/8-CLASS B	004-002675
DPX-SL 5030	10	AUGER-8″	1HP-1750RPM-60HZ-240/480V-3P-143T- 7/8-CLASS B	004-002355
DPX-SL 8050	15	AUGER-8″	2HP-1750RPM-60HZ-240/480V-3P-145T- 7/8-CLASS B	004-002673
DPX-SL 10060	20	AUGER-8″	2HP-1750RPM-60HZ-240/480V-3P-145T- 7/8-CLASS B	004-002673
DPX-SL 12560	25	AUGER-8″	3HP-1750RPM-60HZ-240/480V-3P-182T-1 1/8-CLASS B	004-002671
DPX-SL 15090	30	AUGER-8″	3HP-1750RPM-60HZ-240/480V-3P-182T-1 1/8-CLASS B	004-002671
DPX-SL 200120	40	AUGER-10″	10HP-1750RPM-60HZ-240/480V-3P-215T-1 3/8-CLASS B	004-002675
DPX4T 5630	10	AUGER-8″	2HP-1750RPM-60HZ-240/480V-3P-145T- 7/8-CLASS B	004-002673
DPX4T 8460	15	AUGER-8″	2HP-1750RPM-60HZ-240/480V-3P-145T- 7/8-CLASS B	004-002673
DPX4T 11260	20	AUGER-8″	3HP-1750RPM-60HZ-240/480V-3P-182T-1 1/8-CLASS B	004-002671
DPX4T 140100	25	AUGER-8″	3HP-1750RPM-60HZ-240/480V-3P-182T-1 1/8-CLASS B	004-002671
DPX4T 16890	30	AUGER-8″	5HP-1750RPM-60HZ-240/480V-3P-184T-1 1/8-CLASS B	004-002672
DPX4T 224120	40	AUGER-10″	10HP-1750RPM-60HZ-240/480V-3P-215T-1 3/8-CLASS B	004-002675
DPX8T 6440	10	AUGER-8″	2HP-1750RPM-60HZ-240/480V-3P-145T- 7/8-CLASS B	004-002673
DPX8T 9660	15	N/A		
DPX8T 12880	20	AUGER-8″	3HP-1750RPM-60HZ-240/480V-3P-182T-1 1/8-CLASS B	004-002671
DPX8T 160120	25	AUGER-8″	5HP-1750RPM-60HZ-240/480V-3P-184T-1 1/8-CLASS B	004-002672
DPX8T 192120	30	AUGER-8″	5HP-1750RPM-60HZ-240/480V-3P-184T-1 1/8-CLASS B	004-002672
DPX8T 256160	40	AUGER-10″	10HP-1750RPM-60HZ-240/480V-3P-215T-1 3/8-CLASS B	004-002675
DPX12T 7250	10	AUGER-10″	2HP-1750RPM-60HZ-240/480V-3P-145T- 7/8-CLASS B	004-002673
DPX12T 10860	15	AUGER-10″	2HP-1750RPM-60HZ-240/480V-3P-145T- 7/8-CLASS B	004-002673
DPX12T 144100	20	AUGER-10″	3HP-1750RPM-60HZ-240/480V-3P-182T-1 1/8-CLASS B	004-002671
DPX12T 175120	25	AUGER-10″	5HP-1750RPM-60HZ-240/480V-3P-184T-1 1/8-CLASS B	004-002672
DPX12T 216150	30	AUGER-10″	5HP-1750RPM-60HZ-240/480V-3P-184T-1 1/8-CLASS B	004-002672
DPX12T 288200	40	AUGER-10″	10HP-1750RPM-60HZ-240/480V-3P-215T-1 3/8-CLASS B	004-002675
DPX16GT 8250	10	AUGER-10″	2HP-1750RPM-60HZ-240/480V-3P-145T- 7/8-CLASS B	004-002673
DPX16GT 12360	15	AUGER-10″	2HP-1750RPM-60HZ-240/480V-3P-145T- 7/8-CLASS B	004-002673
DPX16GT 164100	20	AUGER-10″	3HP-1750RPM-60HZ-240/480V-3P-182T-1 1/8-CLASS B	004-002671
DPX16GT 210120	25	AUGER-10″	5HP-1750RPM-60HZ-240/480V-3P-184T-1 1/8-CLASS B	004-002672
DPX16GT 246150	30	AUGER-10″	5HP-1750RPM-60HZ-240/480V-3P-184T-1 1/8-CLASS B	004-002672
DPX16GT 328200	40	AUGER-10″	10HP-1750RPM-60HZ-240/480V-3P-215T-1 3/8-CLASS B	004-002675

NOTE: 1. ALL MOTORS SHOWN 240V/480V-3P UNLESS STATED (1P) INDICATING 230V-1P.

STANDARD LEVELING (AUGER) SYSTEM

ALL MOTORS – 380V-3P

MODEL	FT	TYPE	MOTOR DESCRIPTION	DELUX MOTOR P/N.
MSF 41515-CF	10	AUGER-8″	1HP-1450RPM-50HZ- 380V-3P-143T- 7/8-CLASS B	004-007853
MSF 41515-AB	10	AUGER-8″	1HP-1450RPM-50HZ- 380V-3P-143T- 7/8-CLASS B	004-007853
MSF 62520-CF	15	AUGER-8"	2HP-1450RPM-50HZ- 380V-3P-145T- 7/8-CLASS B	004-007854
MSF 62520-AB	15	AUGER-8″	2HP-1450RPM-50HZ- 380V-3P-145T- 7/8-CLASS B	004-007854
MSF 72525-CF	15	AUGER-8″	2HP-1450RPM-50HZ- 380V-3P-145T- 7/8-CLASS B	004-007854
MSF 72525-AB	15	AUGER-8"	2HP-1450RPM-50HZ- 380V-3P-145T- 7/8-CLASS B	004-007854
DP 3015	10	AUGER-8″	1HP-1450RPM-50HZ- 380V-3P-143T- 7/8-CLASS B	004-007853
DP 4025	15	AUGER-8″	2HP-1450RPM-50HZ- 380V-3P-145T- 7/8-CLASS B	004-007854
DP 6030	20	AUGER-8″	2HP-1450RPM-50HZ- 380V-3P-145T- 7/8-CLASS B	004-007854
DP 7550	25	AUGER-8″	3HP-1450RPM-50HZ- 380V-3P-182T-1 1/8-CLASS B	004-007855
DP 9045	30	AUGER-8″	3HP-1450RPM-50HZ- 380V-3P-182T-1 1/8-CLASS B	004-007855
DP 12060	40	AUGER-8″	5HP-1450RPM-50HZ- 380V-3P-184T-1 1/8-CLASS B	004-007856
DP-SL 3520	10	AUGER-8″	1HP-1450RPM-50HZ- 380V-3P-143T- 7/8-CLASS B	004-007853
DP-SL 4530	15	AUGER-8″	2HP-1450RPM-50HZ- 380V-3P-145T- 7/8-CLASS B	004-007854
DP-SL 7040	20	AUGER-8″	2HP-1450RPM-50HZ- 380V-3P-145T- 7/8-CLASS B	004-007854
DP-SL 8560	25	AUGER-8″	3HP-1450RPM-50HZ- 380V-3P-182T-1 1/8-CLASS B	004-007855
DP-SL 10560	30	AUGER-8″	3HP-1450RPM-50HZ- 380V-3P-182T-1 1/8-CLASS B	004-007855
DP-SL 14080	40	AUGER-8″	5HP-1450RPM-50HZ- 380V-3P-184T-1 1/8-CLASS B	004-007856

NOTE: 1. ALL MOTORS SHOWN 380V-3P.

STANDARD LEVELING (AUGER) SYSTEM

ALL MOTORS – 380V-3P

MODEL	FT	TYPE	MOTOR DESCRIPTION	DELUX MOTOR P/N.
DPX 4525	10	AUGER-8″	1HP-1450RPM-50HZ- 380V-3P-143T- 7/8-CLASS B	004-007853
DPX 7040	15	AUGER-8″	2HP-1450RPM-50HZ- 380V-3P-145T- 7/8-CLASS B	004-007854
DPX 9050	20	AUGER-8″	2HP-1450RPM-50HZ- 380V-3P-145T- 7/8-CLASS B	004-007854
DPX 13575	30	AUGER-8″	3HP-1450RPM-50HZ- 380V-3P-182T-1 1/8-CLASS B	004-007855
DPX 180100	40	AUGER-10″	10HP-1450RPM-50HZ- 380V-3P-215T-1 3/8-CLASS B	004-007857
DPX-SL 5030	10	AUGER-8″	1HP-1450RPM-50HZ- 380V-3P-143T- 7/8-CLASS B	004-007853
DPX-SL 8050	15	AUGER-8″	2HP-1450RPM-50HZ- 380V-3P-145T- 7/8-CLASS B	004-007854
DPX-SL 10060	20	AUGER-8″	2HP-1450RPM-50HZ- 380V-3P-145T- 7/8-CLASS B	004-007854
DPX-SL 12560	25	AUGER-8″	3HP-1450RPM-50HZ- 380V-3P-182T-1 1/8-CLASS B	004-007855
DPX-SL 15090	30	AUGER-8″	3HP-1450RPM-50HZ- 380V-3P-182T-1 1/8-CLASS B	004-007855
DPX-SL 200120	40	AUGER-10″	10HP-1450RPM-50HZ- 380V-3P-215T-1 3/8-CLASS B	004-007857
DPX4T 5630	10	AUGER-8″	2HP-1450RPM-50HZ- 380V-3P-145T- 7/8-CLASS B	004-007854
DPX4T 8460	15	AUGER-8″	2HP-1450RPM-50HZ- 380V-3P-145T- 7/8-CLASS B	004-007854
DPX4T 11260	20	AUGER-8″	3HP-1450RPM-50HZ- 380V-3P-182T-1 1/8-CLASS B	004-007855
DPX4T 140100	25	AUGER-8″	3HP-1450RPM-50HZ- 380V-3P-182T-1 1/8-CLASS B	004-007855
DPX4T 16890	30	AUGER-8″	5HP-1450RPM-50HZ- 380V-3P-184T-1 1/8-CLASS B	004-007856
DPX4T 224120	40	AUGER-10″	10HP-1450RPM-50HZ- 380V-3P-215T-1 3/8-CLASS B	004-007857
DPX8T 6440	10	AUGER-8″	2HP-1450RPM-50HZ- 380V-3P-145T- 7/8-CLASS B	004-007854
DPX8T 9660	15	N/A		
DPX8T 12880	20	AUGER-8″	3HP-1450RPM-50HZ- 380V-3P-182T-1 1/8-CLASS B	004-007855
DPX8T 160120	25	AUGER-8″	5HP-1450RPM-50HZ- 380V-3P-184T-1 1/8-CLASS B	004-007856
DPX8T 192120	30	AUGER-8″	5HP-1450RPM-50HZ- 380V-3P-184T-1 1/8-CLASS B	004-002656
DPX8T 256160	40	AUGER-10″	10HP-1450RPM-50HZ- 380V-3P-215T-1 3/8-CLASS B	004-007857
DPX12T 7250	10	AUGER-10″	2HP-1450RPM-50HZ- 380V-3P-145T- 7/8-CLASS B	004-007854
DPX12T 10860	15	AUGER-10″	2HP-1450RPM-50HZ- 380V-3P-145T- 7/8-CLASS B	004-007854
DPX12T 144100	20	AUGER-10″	3HP-1450RPM-50HZ- 380V-3P-182T-1 1/8-CLASS B	004-007855
DPX12T 175120	25	AUGER-10″	5HP-1450RPM-50HZ- 380V-3P-184T-1 1/8-CLASS B	004-007856
DPX12T 216150	30	AUGER-10″	5HP-1450RPM-50HZ- 380V-3P-184T-1 1/8-CLASS B	004-007856
DPX12T 288200	40	AUGER-10″	10HP-1450RPM-50HZ- 380V-3P-215T-1 3/8-CLASS B	004-007857
DPX16GT 8250	10	AUGER-10″	2HP-1450RPM-50HZ- 380V-3P-145T- 7/8-CLASS B	004-007854
DPX16GT 12360	15	AUGER-10″	2HP-1450RPM-50HZ- 380V-3P-145T- 7/8-CLASS B	004-007854
DPX16GT 164100	20	AUGER-10″	3HP-1450RPM-50HZ- 380V-3P-182T-1 1/8-CLASS B	004-007855
DPX16GT 210120	25	AUGER-10″	5HP-1450RPM-50HZ- 380V-3P-184T-1 1/8-CLASS B	004-007856
DPX16GT 246150	30	AUGER-10″	5HP-1450RPM-50HZ- 380V-3P-184T-1 1/8-CLASS B	004-007856
DPX16GT 328200	40	AUGER-10″	10HP-1450RPM-50HZ- 380V-3P-215T-1 3/8-CLASS B	004-007857

NOTE: 1. ALL MOTORS SHOWN 380V-3P.

STANDARD LEVELING (AUGER) SYSTEM

ALL MOTOR - 575V-3P

MODEL		FT	TYPE	MOTOR DESCRIPTION			DELUX MOTOR P/N.
MSF	41515-CF	10	AUGER-8"	1HP-1750RPM-60HZ-	575V-3P-143T-	7/8-CLASS B	004-007630
MSF	41515-AB	10	AUGER-8"	1HP-1750RPM-60HZ-	575V-3P-143T-	7/8-CLASS B	004-007630
MSF	62520-CF	15	AUGER-8"	2HP-1750RPM-60HZ-	575V-3P-145T-	7/8-CLASS B	004-007425
MSF	62520-AB	15	AUGER-8"	2HP-1750RPM-60HZ-	575V-3P 145T-	7/8-CLASS B	004-007425
MSF	72525-CF	15	AUGER-8"	2HP-1750RPM-60HZ-	575V-3P-145T-	7/8-CLASS B	004-007425
MSF	72525-AB	15	AUGER-8"	2HP-1750RPM-60HZ-	575V-3P-145T-	7/8-CLASS B	004-007425
DP	3015	10	AUGER-8"	1HP-1750RPM-60HZ-	575V-3P-143T-	7/8-CLASS B	004-007630
DP	4025	15	AUGER-8"	2HP-1750RPM-60HZ-	575V-3P-145T-	7/8-CLASS B	004-007425
DP	6030	20	AUGER-8"	2HP-1750RPM-60HZ-	575V-3P-145T-	7/8-CLASS B	004-007425
DP	7550	25	AUGER-8"	3HP-1750RPM-60HZ-	575V-3P-182T-1	1/8-CLASS B	004-007615
DP	9045	30	AUGER-8"	3HP-1750RPM-60HZ-	575V-3P-182T-1	1/8-CLASS B	004-007615
DP	12060	40	AUGER-8"	5HP-1750RPM-60HZ-	575V-3P-184T-1	1/8-CLASS B	004-007629
DP-SL	3520	10	AUGER-8"	1HP-1750RPM-60HZ-	575V-3P-143T-	7/8-CLASS B	004-007630
DP-SL	4530	15	AUGER-8"	2HP-1750RPM-60HZ-	575V-3P-145T-	7/8-CLASS B	004-007425
DP-SL	7040	20	AUGER-8"	2HP-1750RPM-60HZ-	575V-3P-145T-	7/8-CLASS B	004-007425
DP-SL	8560	25	AUGER-8"	3HP-1750RPM-60HZ-	575V-3P-182T-1	1/8-CLASS B	004-007615
DP-SL	10560	30	AUGER-8"	3HP-1750RPM-60HZ-	575V-3P-182T-1	1/8-CLASS B	004-007615
DP-SL	14080	40	AUGER-8"	5HP-1750RPM-60HZ-	575V-3P-184T-1	1/8-CLASS B	004-007629

NOTE: 1 ALL MOTORS SHOWN 575V-3P.

STANDARD LEVELING (AUGER) SYSTEM

ALL MOTOR – 575V-3P

MODEL	FT	TYPE	MOTOR DESCRIPTION	DELUX MOTOR P/N.
DPX 4525	10	AUGER-8"	1HP-1750RPM-60HZ- 575V-3P-143T- 7/8-CLASS B	004-007630
DPX 7040	15	AUGER-8"	2HP-1750RPM-60HZ- 575V-3P-145T- 7/8-CLASS B	004-007425
DPX 9050	20	AUGER-8"	2HP-1750RPM-60HZ- 575V-3P-145T- 7/8-CLASS B	004-007425
DPX 13575	30	AUGER-8"	3HP-1750RPM-60HZ- 575V-3P-182T-1 1/8-CLASS B	004-007615
DPX 180100	40	AUGER-10"	10HP-1750RPM-60HZ- 575V-3P-215T-1 3/8-CLASS B	004-007570
DPX-SL 5030	10	AUGER-8"	1HP-1750RPM-60HZ- 575V-3P-143T- 7/8-CLASS B	004-007630
DPX-SL 8050	15	AUGER-8"	2HP-1750RPM-60HZ- 575V-3P-145T- 7/8-CLASS B	004-007425
DPX-SL 10060	20	AUGER-8"	2HP-1750RPM-60HZ- 575V-3P-145T- 7/8-CLASS B	004-007425
DPX-SL 12560	25	AUGER-8"	3HP-1750RPM-60HZ- 575V-3P-182T-1 1/8-CLASS B	004-007615
DPX-SL 15090	30	AUGER-8"	3HP-1750RPM-60HZ- 575V-3P-182T-1 1/8-CLASS B	004-007615
DPX-SL 200120	40	AUGER-10"	10HP-1750RPM-60HZ- 575V-3P-215T-1 3/8-CLASS B	004-007570
DPX4T 5630	10	AUGER-8"	2HP-1750RPM-60HZ- 575V-3P-145T- 7/8-CLASS B	004-007425
DPX4T 8460	15	AUGER-8"	2HP-1750RPM-60HZ- 575V-3P-145T- 7/8-CLASS B	004-007425
DPX4T 11260	20	AUGER-8"	3HP-1750RPM-60HZ- 575V-3P-182T-1 1/8-CLASS B	004-007615
DPX4T 140100	25	AUGER-8"	3HP-1750RPM-60HZ- 575V-3P-182T-1 1/8-CLASS B	004-007615
DPX4T 16890	30	AUGER-8"	5HP-1750RPM-60HZ- 575V-3P-184T-1 1/8-CLASS B	004-007629
DPX4T 224120	40	AUGER-10"	10HP-1750RPM-60HZ- 575V-3P-215T-1 3/8-CLASS B	004-007570
DPX8T 6440	10	AUGER-8"	2HP-1750RPM-60HZ- 575V-3P-145T- 7/8-CLASS B	004-007425
DPX8T 9660	15	N/A		
DPX8T 12880	20	AUGER-8"	3HP-1750RPM-60HZ- 575V-3P-182T-1 1/8-CLASS B	004-007615
DPX8T 160120	25	AUGER-8"	5HP-1750RPM-60HZ- 575V-3P-184T-1 1/8-CLASS B	004-007629
DPX8T 192120	30	AUGER-8"	5HP-1750RPM-60HZ- 575V-3P-184T-1 1/8-CLASS B	004-007629
DPX8T 256160	40	AUGER-10"	10HP-1750RPM-60HZ- 575V-3P-215T-1 3/8-CLASS B	004-007570
DPX12T 7250	10	AUGER-10"	2HP-1750RPM-60HZ- 575V-3P-145T- 7/8-CLASS B	004-007425
DPX12T 10860	15	AUGER-10"	2HP-1750RPM-60HZ- 575V-3P-145T- 7/8-CLASS B	004-007425
DPX12T 144100	20	AUGER-10"	3HP-1750RPM-60HZ- 575V-3P-182T-1 1/8-CLASS B	004-007615
DPX12T 175120	25	AUGER-10"	5HP-1750RPM-60HZ- 575V-3P-184T-1 1/8-CLASS B	004-007629
DPX12T 216150	30	AUGER-10"	5HP-1750RPM-60HZ- 575V-3P-184T-1 1/8-CLASS B	004-007629
DPX12T 288200	40	AUGER-10"	10HP-1750RPM-60HZ- 575V-3P-215T-1 3/8-CLASS B	004-007570
DPX16GT 8250	10	AUGER-10"	2HP-1750RPM-60HZ- 575V-3P-145T- 7/8-CLASS B	004-007425
DPX16GT 12360	15	AUGER-10"	2HP-1750RPM-60HZ- 575V-3P-145T- 7/8-CLASS B	004-007425
DPX16GT 164100	20	AUGER-10"	3HP-1750RPM-60HZ- 575V-3P-182T-1 1/8-CLASS B	004-007615
DPX16GT 210120	25	AUGER-10"	5HP-1750RPM-60HZ- 575V-3P-184T-1 1/8-CLASS B	004-007629
DPX16GT 246150	30	AUGER-10"	5HP-1750RPM-60HZ- 575V-3P-184T-1 1/8-CLASS B	004-007629
DPX16GT 328200	40	AUGER-10"	10HP-1750RPM-60HZ- 575V-3P-215T-1 3/8-CLASS B	004-007570

NOTE: 1 ALL MOTORS SHOWN 575V-3P.

SHEAVES & BUSHINGS
STANDARD LEVELING SYSTEM
(AUGER)
230V-1P 240/480/575V-3P

MODEL	FT	MOTOR		AUGER	
		SHEAVE	BUSHING	SHEAVE	BUSHING
MSF-31010-CF 1P	10	1B3.4	SH 7/8	1B18.4	SK 1-1/4
MSF-31010-AB 1P	10	1B3.4	SH 7/8	1B18.4	SK 1-1/4
MSF-41515-CF 1P	10	1B3.4	SH 7/8	1B18.4	SK 1-1/4
MSF-41515-AB 1P	10	1B3.4	SH 7/8	1B18.4	SK 1-1/4
MSF-62520-CF	15	2B3.4	SH 7/8	2B18.4	SK 1-1/4
MSF-62520-AB	15	2B3.4	SH 7/8	2B18.4	SK 1-1/4
MSF-72525-CF	15	2B3.4	SH 7/8	2B18.4	SK 1-1/4
MSF-72525-AB	15	2B3.4	SH 7/8	2B18.4	SK 1-1/4
DP 2510 1P	10	1B3.4	SH 7/8	1B18.4	SK 1-1/4
DP 3015 1P	10	1B3.4	SH 7/8	1B18.4	SK 1-1/4
DP 4020 1P	15	2B3.4	SH 1-1/8	2B18.4	SK 1-1/4
DP 5020 1P	20	2B3.4	SH 1-1/8	2B18.4	SK 1-1/4
DP 7530 1P	30	2B3.4	SH 1-1/8	2B18.4	SK 1-1/4
DP 10040 1P	40	2B3.4	SH 1-1/8	2B18.4	SK 1-1/4
DP 3015	10	1B3.4	SH 7/8	1B18.4	SK 1-1/4
DP 4025	15	2B3.4	SH 7/8	2B18.4	SK 1-1/4
DP 6030	20	2B3.4	SH 7/8	2B18.4	SK 1-1/4
DP 7550	25	2B3.4	SH 1-1/8	2B18.4	SK 1-1/4
DP 9045	30	2B3.4	SH 1-1/8	2B18.4	SK 1-1/4
DP 12060	40	2B3.4	SH 1-1/8	2B18.4	SK 1-1/4
DPSL 3520	10	1B3.4	SH 7/8	1B18.4	SK 1-1/4
DPSL 4530	15	2B3.4	SH 7/8	2B18.4	SK 1-1/4
DPSL 7040	20	2B3.4	SH 7/8	2B18.4	SK 1-1/4
DPSL 8560	25	2B3.4	SH 1-1/8	2B18.4	SK 1-1/4
DPSL 10560	30	2B3.4	SH 1-1/8	2B18.4	SK 1-1/4
DPSL 14080	40	2B3.4	SH 1-1/8	2B18.4	SK 1-1/4

NOTE: 1. USE BELT P/N: 049-003364 (B82).
2. REFER TO SHEAVE-BUSHING-BELT PAGE FOR PART NUMBERS.

SHEAVES & BUSHINGS
STANDARD LEVELING SYSTEM
(AUGER)
230V-1P 240/480/575V-3P

MODEL	FT	MOTOR		AUGER	
		SHEAVE	BUSHING	SHEAVE	BUSHING
DPX 4525	10	1B3.4	SH 7/8	1B18.4	SK 1-1/4
DPX 7040	15	2B3.4	SH 7/8	2B18.4	SK 1-1/4
DPX 9050	20	2B3.4	SH 7/8	2B18.4	SK 1-1/4
DPX 13575	30	2B3.4	SH 1-1/8	2B18.4	SK 1-1/4
DPX 180100	40	3B3.4	SH 1-3/8	3B18.4	SK 1-1/4
DPXSL 5030	10	1B3.4	SH 7/8	1B18.4	SK 1-1/4
DPXSL 8050	15	2B3.4	SH 7/8	2B18.4	SK 1-1/4
DPXSL 10060	20	2B3.4	SH 7/8	2B18.4	SK 1-1/4
DPXSL 12560	25	2B3.4	SH 1-1/8	2B18.4	SK 1-1/4
DPXSL 15090	30	2B3.4	SH 1-1/8	2B18.4	SK 1-1/4
DPXSL 200120	40	3B3.4	SH 1-3/8	3B18.4	SK 1-1/4
DPX4T 5630	10	2B3.4	SH 7/8	2B18.4	SK 1-1/4
DPX4T 8460	15	2B3.4	SH 7/8	2B18.4	SK 1-1/4
DPX4T 11260	20	2B3.4	SH 7/8	2B18.4	SK 1-1/4
DPX4T 140100	25	2B3.4	SH 1-1/8	2B18.4	SK 1-1/4
DPX4T 16890	30	2B3.4	SH 1-1/8	2B18.4	SK 1-1/4
DPX4T 224120	40	3B3.4	SH 1-3/8	3B18.4	SK 1-1/4
DPX8T 6440	10	2B3.4	SH 7/8	2B18.4	SK 1-1/4
DPX8T 9660	15	2B3.4	SH 7/8	2B18.4	SK 1-1/4
DPX8T 12880	20	2B3.4	SH 7/8	2B18.4	SK 1-1/4
DPX8T 160120	25	2B3.4	SH 1-1/8	2B18.4	SK 1-1/4
DPX8T 192120	30	2B3.4	SH 1-1/8	2B18.4	SK 1-1/4
DPX8T 256160	40	3B3.4	SH 1-3/8	3B18.4	SK 1-1/4
DPX12T 7250	10	2B3.4	SH 7/8	2B18.4	SK 1-1/4
DPX12T 10860	15	2B3.4	SH 7/8	2B18.4	SK 1-1/4
DPX12T 144100	20	2B3.4	SH 7/8	2B18.4	SK 1-1/4
DPX12T 175120	25	2B3.4	SH 1-1/8	2B18.4	SK 1-1/4
DPX12T 216150	30	2B3.4	SH 1-1/8	2B18.4	SK 1-1/4
DPX12T 288200	40	3B3.4	SH 1-3/8	3B18.4	SK 1-1/4
DPX16GT 8250	10	2B3.4	SH 7/8	2B18.4	SK 1-1/4
DPX16GT 12360	15	2B3.4	SH 7/8	2B18.4	SK 1-1/4
DPX16GT 164100	20	2B3.4	SH 7/8	2B18.4	SK 1-1/4
DPX16GT 210120	25	2B3.4	SH 1-1/8	2B18.4	SK 1-1/4
DPX16GT 246150	30	2B3.4	SH 1-1/8	2B18.4	SK 1-1/4
DPX16GT 328200	40	3B3.4	SH 1-3/8	3B18.4	SK 1-1/4

NOTE: 1. USE BELT P/N: 049-003364 (B82).
2. REFER TO SHEAVE-BUSHING-BELT PAGE FOR PART NUMBERS.

SHEAVES & BUSHINGS
STANDARD LEVELING SYSTEM
(AUGER)
380V-3P

MODEL	FT	MOTOR		AUGER	
		SHEAVE	BUSHING	SHEAVE	BUSHING
MSF-41515-CF	10	1B3.4	SH 7/8	1B15.4	SK 1-1/4
MSF-41515-AB	10	1B3.4	SH 7/8	1B15.4	SK 1-1/4
MSF-62520-CF	15	2B3.4	SH 7/8	2B15.4	SK 1-1/4
MSF-62520-AB	15	2B3.4	SH 7/8	2B15.4	SK 1-1/4
MSF-72525-CF	15	2B3.4	SH 7/8	2B15.4	SK 1-1/4
MSF-72525-AB	15	2B3.4	SH 7/8	2B15.4	SK 1-1/4
DP 3015	10	1B3.4	SH 7/8	1B15.4	SK 1-1/4
DP 4025	15	2B3.4	SH 7/8	2B15.4	SK 1-1/4
DP 6030	20	2B3.4	SH 7/8	2B15.4	SK 1-1/4
DP 7550	25	2B3.4	SH 1-1/8	2B15.4	SK 1-1/4
DP 9045	30	2B3.4	SH 1-1/8	2B15.4	SK 1-1/4
DP 12060	40	2B3.4	SH 1-1/8	2B15.4	SK 1-1/4
DPSL 3520	10	1B3.4	SH 7/8	1B15.4	SK 1-1/4
DPSL 4530	15	2B3.4	SH 7/8	2B15.4	SK 1-1/4
DPSL 7040	20	2B3.4	SH 7/8	2B15.4	SK 1-1/4
DPSL 8560	25	2B3.4	SH 1-1/8	2B15.4	SK 1-1/4
DPSL 10560	30	2B3.4	SH 1-1/8	2B15.4	SK 1-1/4
DPSL 14080	40	2B3.4	SH 1-1/8	2B15.4	SK 1-1/4
DPX 4525	10	1B3.4	SH 7/8	1B15.4	SK 1-1/4
DPX 7040	15	2B3.4	SH 7/8	2B15.4	SK 1-1/4
DPX 9050	20	2B3.4	SH 7/8	2B15.4	SK 1-1/4
DPX 13575	30	2B3.4	SH 1-1/8	2B15.4	SK 1-1/4
DPX 180100	40	3B3.4	SH 1-3/8	3B15.4	SK 1-1/4
DPXSL 5030	10	1B3.4	SH 7/8	1B15.4	SK 1-1/4
DPXSL 8050	15	2B3.4	SH 7/8	2B15.4	SK 1-1/4
DPXSL 10060	20	2B3.4	SH 7/8	2B15.4	SK 1-1/4
DPXSL 12560	25	2B3.4	SH 1-1/8	2B15.4	SK 1-1/4
DPXSL 15090	30	2B3.4	SH 1-1/8	2B15.4	SK 1-1/4
DPXSL 200120	40	3B3.4	SH 1-3/8	3B15.4	SK 1-1/4

NOTE: 1. USE BELT P/N: 049-007874 (B76).
2. REFER TO SHEAVE-BUSHING-BELT PAGE FOR PART NUMBERS.

SHEAVES & BUSHINGS
STANDARD LEVELING SYSTEM
(AUGER)
380V-3P

MODEL	FT	MOTOR		AUGER	
		SHEAVE	BUSHING	SHEAVE	BUSHING
DPX4T 5630	10	2B3.4	SH 7/8	2B15.4	SK 1-1/4
DPX4T 8460	15	2B3.4	SH 7/8	2B15.4	SK 1-1/4
DPX4T 11260	20	2B3.4	SH 1-1/8	2B15.4	SK 1-1/4
DPX4T 140100	25	2B3.4	SH 1-1/8	2B15.4	SK 1-1/4
DPX4T 16890	30	2B3.4	SH 1-1/8	2B15.4	SK 1-1/4
DPX4T 224120	40	3B3.4	SH 1-3/8	3B15.4	SK 1-1/4
DPX8T 6440	10	2B3.4	SH 7/8	2B15.4	SK 1-1/4
DPX8T 9660	15	N/A	N/A	2B15.4	N/A
DPX8T 12880	20	2B3.4	SH 1-1/8	2B15.4	SK 1-1/4
DPX8T 160120	25	2B3.4	SH 1-1/8	2B15.4	SK 1-1/4
DPX8T 192120	30	2B3.4	SH 1-1/8	2B15.4	SK 1-1/4
DPX8T 256160	40	3B3.4	SH 1-3/8	3B15.4	SK 1-1/4
DPX12T 7250	10	2B3.4	SH 1-3/8	2B15.4	SK 1-1/4
DPX12T 10860	15	2B3.4	SH 1-3/8	2B15.4	SK 1-1/4
DPX12T 144100	20	2B3.4	SH 1-3/8	2B15.4	SK 1-1/4
DPX12T 175120	25	2B3.4	SH 1-3/8	2B15.4	SK 1-1/4
DPX12T 216150	30	2B3.4	SH 1-3/8	2B15.4	SK 1-1/4
DPX12T 288200	40	3B3.4	SH 1-3/8	3B15.4	SK 1-1/4
DPX16GT 8250	10	2B3.4	SH 1-3/8	2B15.4	SK 1-1/4
DPX16GT 12360	15	2B3.4	SH 1-3/8	2B15.4	SK 1-1/4
DPX16GT 164100	20	2B3.4	SH 1-3/8	2B15.4	SK 1-1/4
DPX16GT 210120	25	2B3.4	SH 1-3/8	2B15.4	SK 1-1/4
DPX16GT 246150	30	2B3.4	SH 1-3/8	2B15.4	SK 1-1/4
DPX16GT 328200	40	3B3.4	SH 1-3/8	3B15.4	SK 1-1/4

NOTE: 1. USE BELT P/N: 049-007874 (B76).
2. REFER TO SHEAVE-BUSHING-BELT PAGE FOR PART NUMBERS.

DELUX
Continuous Flow GRAIN DRYERS

SHIPPING LISTS

- DP & DPSL SERIES
- DPX & DPXSL SERIES
- DPX4T SERIES
- DPX8T SERIES
- DPX12T SERIES
- DPX16GT SERIES

MODEL:_____LENGTH_____FT

SERIAL NO:____-____-_____-_____-_____

SHIPPING LIST - ERECTION - SPLICE PLATES AND HARDWARE

DPX AND DPXSL MODELS

ITEM	PART NUMBER	PART DESCRIPTION	10	15	20	25	30	40
1.	100-005261	SPLICE PLATE SHORT	4	4	4	4	4	4
2.	100-005262	SPLICE PLATE LONG	1	1	1	1	1	1
3.	100-006356	SPLICE PLATE PLENUM	2	2	2	2	2	2
4.	040-002739	TCS 5/16 X 3/4	50	50	50	50	50	50
5.	040-001483	BOLT-WL 3/8 X 1	64	98	128	160	192	256
6.	040-001460	NUT-WL 3/8	64	98	128	160	192	256
7.	040-005321	BOLT-WL 5/16 X 3/4	24	24	24	24	24	24
8.	040-001459	NUT-WL 5/16	24	24	24	24	24	24
9.	300-010404	PLENUM DOOR SUB-ASS'Y	1	1	1	1	1	1
10.	100-010345	SIDES - DOOR FRAME	2	2	2	2	2	2
11.	100-010344	TOP/BOT.- DOOR FRAME	2	2	2	2	2	2
12.	100-010353	HINGE SUPPORT.-DOOR	3	3	3	3	3	3
13.	040-001434	BOLT-HEX 5/16 x 3/4	3	3	3	3	3	3
14.	040-004068	NUT-NYLOCK 5/16	3	3	3	3	3	3

* HARDWARE INCLUDED FOR ROOF TO BASE ONLY (USE BOLTS-WL 3/8 X 1)

* GARNER IS ASSEMBLED ON ROOF.

* SPLICE PLATES (USE TCS 5/16 X 3/4)

* PLENUM DOOR MUST BE INSTALLED IN FIELD,
HARDWARE INCLUDED (USE BOLTS-WL 5/16 X 3/4).

* REFER TO ILLUSTRATION DRAWING P/N 900-005526 FOR LOCATION OF PARTS.

ADDITIONAL SHIPPING LIST FOR MODELS WITH DISCHARGE DRAG CONVEYORS

ITEM	PART NUMBER	PART DESCRIPTION	10	15	20	25	30	40
1.	040-005321	BOLT-WL 5/16 X 3/4	32	42	52	62	72	82
2.	040-001459	NUT-WL 5/16	32	42	52	62	72	82

MODEL:_____LENGTH_____FT

SERIAL NO:____-____-_____-_____-_____

SHIPPING LIST - ERECTION - SPLICE PLATES AND HARDWARE

DPX4T MODELS

ITEM	PART NUMBER	PART DESCRIPTION	10	15	20	25	30	40
1.	100-005261	SPLICE PLATE SHORT	4	4	4	4	4	4
2.	100-005262	SPLICE PLATE LONG	1	1	1	1	1	1
3.	100-006356	SPLICE PLATE PLENUM	2	2	2	2	2	2
4.	040-002739	TCS 5/16 X 3/4	50	50	50	50	50	50
5.	040-001483	BOLT-WL 3/8 X 1	64	98	128	160	192	256
6.	040-001460	NUT-WL 3/8	64	98	128	160	192	256
7.	040-005321	BOLT-WL 5/16 X 3/4	24	24	24	24	24	24
8.	040-001459	NUT-WL 5/16	24	24	24	24	24	24
9.	300-010404	PLENUM DOOR SUB-ASS'Y	1	1	1	1	1	1
10.	100-010345	SIDES - DOOR FRAME	2	2	2	2	2	2
11.	100-010344	TOP/BOT.- DOOR FRAME	2	2	2	2	2	2
12.	100-010353	HINGE SUPPORT.-DOOR	3	3	3	3	3	3
13.	040-001434	BOLT-HEX 5/16 x 3/4	3	3	3	3	3	3
14.	040-004068	NUT-NYLOCK 5/16	3	3	3	3	3	3

* HARDWARE INCLUDED FOR ROOF TO BASE ONLY, (USE BOLTS-WL 3/8 X 1)

* FOUR FOOT EMPTY AND ROOF SHIPPED AS ONE SECTION.

* GARNER IS SHIPPED NOT ASSEMBLED.

* SPLICE PLATES (USE TCS 5/16 X 3/4)

* PLENUM DOOR MUST BE INSTALLED IN FIELD,
HARDWARE INCLUDED (USE BOLTS-WL 5/16 X 3/4)

* REFER TO ILLUSTRATION DRAWING P/N 900-005526 FOR LOCATION OF PARTS.

ADDITIONAL SHIPPING LIST FOR MODELS WITH DISCHARGE DRAG CONVEYORS

ITEM	PART NUMBER	PART DESCRIPTION	10	15	20	25	30	40
1.	040-005321	BOLT-WL 5/16 X 3/4	32	42	52	62	72	82
2.	040-001459	NUT-WL 5/16	32	42	52	62	72	82

MODEL:_____LENGTH_____FT

SERIAL NO:____-____-_____-_____-_____

SHIPPING LIST - ERECTION - SPLICE PLATES AND HARDWARE

DPX8T MODELS

ITEM	PART NUMBER	PART DESCRIPTION	10	15	20	25	30	40
1.	100-005261	SPLICE PLATE SHORT	8	NA	8	8	8	8
2.	100-005262	SPLICE PLATE LONG	3	NA	3	3	3	3
3.	100-006356	SPLICE PLATE PLENUM	2	NA	2	2	2	2
4.	040-002739	TCS 5/16 X 3/4	110	NA	110	110	110	110
5.	040-002193	BOLT-WL 3/8 X 3/4	8	NA	16	16	24	32
6.	040-001483	BOLT-WL 3/8 X 1	128	NA	256	320	384	512
7.	040-001460	NUT-WL 3/8	136	NA	272	336	408	544
8.	040-005321	BOLT-WL 5/16 X 3/4	24	NA	24	24	24	24
9.	040-001459	NUT-WL 5/16	24	NA	24	24	24	24
10.	300-010404	PLENUM DOOR SUB-ASS'Y	1	1	1	1	1	1
11.	100-010345	SIDES - DOOR FRAME	2	2	2	2	2	2
12.	100-010344	TOP/BOT.- DOOR FRAME	2	2	2	2	2	2
13.	100-010353	HINGE SUPPORT.-DOOR	3	3	3	3	3	3
14.	040-001434	BOLT-HEX 5/16 x 3/4	3	3	3	3	3	3
15.	040-004068	NUT-NYLOCK 5/16	3	3	3	3	3	3

* HARDWARE INCLUDED FOR ROOF TO EIGHT FOOT SECTION AND EIGHT FOOT SECTION TO BASE. (USE BOLTS-WL 3/8 X 1)

* GARNER IS SHIPPED ASSEMBLED ON ROOF.

* SPLICE PLATES (USE TCS 5/16 X 3/4)

* BURNER DRUMS MUST BE INSTALLED IN FIELD, HARDWARE INCLUDED (USE BOLTS-WL 3/8 X 3/4)

* REFER TO ILLUSTRATION DRAWING P/N 900-005526 FOR LOCATION OF PARTS.

ADDITIONAL SHIPPING LIST FOR MODELS WITH DISCHARGE DRAG CONVEYORS

ITEM	PART NUMBER	PART DESCRIPTION	10	15	20	25	30	40
1.	040-005321	BOLT-WL 5/16 X 3/4	32	NA	52	62	72	82
2.	040-001459	NUT-WL 5/16	32	NA	52	62	72	82

MODEL:_____LENGTH_____FT

SERIAL NO:____-____-_____-_____-_____

SHIPPING LIST - ERECTION - SPLICE PLATES AND HARDWARE

DPX12T/DPX16GT MODELS

ITEM	PART NUMBER	PART DESCRIPTION	10	15	20	25	30	40
1.	100-005261	SPLICE PLATE SHORT	8	8	8	8	8	8
2.	100-005262	SPLICE PLATE LONG	4	4	4	4	4	4
3.	040-002739	TCS 5/16-18UNC X 3/4	120	120	120	120	120	120
4.	040-002193	BOLT 3/8-16UNC X 3/4	8	16	16	16	24	32
5.	040-001483	BOLT 3/8-16UNC X 1	128	192	256	320	384	512
6.	040-001460	NUT 3/8-16UNC	136	208	272	336	408	544

* HARDWARE INCLUDED FOR ROOF TO TWELVE FOOT SECTION AND TWELVE FOOT SECTION TO BASE. (USE BOLTS 3/8-16UNC X 1)

* DPX12T: GARNER IS SHIPPED ASSEMBLED ON ROOF.
* DPX16GT: GARNER IS SHIPPED **NOT** ASSEMBLED.

* SPLICE PLATES (USE TCS 5/16-18UNC X 3/4)

* BURNER DRUMS MUST BE INSTALLED IN FIELD, HARDWARE INCLUDED (USE BOLTS 3/8-16UNC X 3/4)

* REFER TO ILLUSTRATION DRAWING P/N 900-005526 FOR LOCATION OF PARTS.

ADDITIONAL SHIPPING LIST FOR MODELS WITH DISCHARGE DRAG CONVEYORS

ITEM	PART NUMBER	PART DESCRIPTION	10	15	20	25	30	40
1.	040-005321	BOLT 5/16-16UNC-3/4	32	42	52	62	72	82
2.	040-001459	NUT 5/16-18UNC	32	42	52	62	72	82

MODEL: _____LENGTH_____FT

SERIAL NO:____-____-____-_____-_____

SHIPPING LIST - GARNER ASSEMBLY – MSF/DP MODELS

PARTS LISTED ARE FOR AUGERS W/ 1 1/4" SHAFTS

1P - DENOTES 230V-1P DRYERS

W/ 8" OR W/O 8" INDICATES WITH OR WITHOUT 8" DIA FILLING HOLE

PART NUMBER	PART DESCRIPTION	1P (FT)10	1P 15	1P 20	1P 30	1P 40
400-009208	TOP ASS'Y 10FT W/ONE DOOR W/ 8"	1	-	-	-	-
400-009205	TOP ASS'Y 10FT W/ONE DOOR W/O 8"	-	1	1	1	1
200-002976	TOP ASS'Y 10FT INTERMEDIATE	-	-	-	1	2
200-005516	TOP ASS'Y 5FT REAR W/ 8"	-	1	-	-	-
200-002978	TOP ASS'Y 10FT REAR W/ 8"	-	-	1	1	1
400-007623	GARNER SIDE ASS'Y 5FT - 22"	-	2	-	-	-
400-007624	GARNER SIDE ASS'Y 10FT - 22"	2	2	4	6	8
100-002599	CROSS STRAP	2	2	4	6	8
100-002589	TOP GARNER SIDE STIFFENING BRACKET	2	2	4	6	8
100-007641	LADDER SUPPORT BRACKET	1	1	1	1	1
100-002852	END PLATE FRONT W/SWITCH	1	1	1	1	1
100-006819	END PLATE REAR STANDARD	1	1	1	1	-
100-006820	END PLATE REAR W/SWITCH 40FT	-	-	-	-	1
400-009196	ASS'Y LOW GRAIN SWITCH (MOTOR END)	1	1	1	1	1
400-009197	ASS'Y LOW GRAIN SWITCH (FILL END)	-	-	-	-	1
100-006824	AUGER HEAD PLATE FRONT	1	1	1	1	1
100-006825	AUGER HEAD PLATE REAR	1	1	1	1	1
200-006834	AUGER ONLY 10FT ONLY - 8"	1	-	-	-	-
200-006723	AUGER ONLY FRONT 1OFT - 8"	-	1	1	1	1
200-006724	AUGER ONLY INTER 10FT - 8"	-	-	-	1	2
200-006721	AUGER ONLY REAR 5FT - 8"	-	1	-	-	-
200-006720	AUGER ONLY REAR 10FT - 8"	-	-	1	1	1
100-006727	AUGER SHAFT 1 1/4" FT-KEYED	1	1	1	1	1
100-006726	AUGER SHAFT 1 1/4" INTER	-	1	1	2	3
100-006728	AUGER SHAFT 1 1/4" RE-NON-KEYED	1	1	1	1	1
040-005324	BOLT HEX 7/16-14UNC X 3"	4	8	8	12	16
040-006732	NUT -LOCK 7/16-14UNC	4	8	8	12	16
400-006827	AUGER SUPPORT HANGER ASS'Y - 8"	-	1	1	2	3
100-004700	TROUGH SUPPORT HANGER – 8"	1	-	-	-	-
200-006992	AUGER TROUGH INTER 10FT - 8"	-	-	-	1	2
200-007002	AUGER TROUGH REAR 5FT - 8"	1	1	-	-	-
200-006993	AUGER TROUGH REAR 10FT - 8"	-	-	1	1	1

MODEL: _____LENGTH_____FT

SERIAL NO:____-____-____-_____-_____

SHIPPING LIST - GARNER ASSEMBLY – MSF/DP MODELS

PARTS LISTED ARE FOR AUGERS W/ 1 1/4" SHAFTS

1P - DENOTES 230V-1P DRYERS

W/ 8" OR W/O 8" INDICATES WITH OR WITHOUT 8" DIA FILLING HOLE

PART NUMBER	PART DESCRIPTION (FT)	1P 10	1P 15	1P 20	1P 30	1P 40
200-005388	BELT GUARD	1	1	1	1	1
100-003343	BELT GUARD BACK PLATE	1	1	1	1	1
049-003364	BELT "B82" 83.3PITCH	1	2	2	2	2
056-005370	SHEAVE AUGER 1B18.4	1	-	-	-	-
056-005372	SHEAVE AUGER 2B18.4	-	1	1	1	1
056-006830	BUSHING QD-SK 1-1/4	1	1	1	1	1
056-005371	SHEAVE MOTOR 1B3.4	1	-	-	-	-
056-005373	SHEAVE MOTOR 2B3.4	-	1	1	1	1
056-005375	BUSHING QD-SH 7/8	1	-	-	-	-
056-005376	BUSHING QD-SH 1-1/8	-	1	1	1	1
044-001510	AUGER BEARING W/FLANGE 1 1/4"	2	2	2	2	2
004-003236	MOTOR 1HP 1750RPM 230V-1P 143T 7/8	1	-	-	-	-
004-007779	MOTOR 2HP 1750RPM 230V-1P 182T 1-1/8	-	1	1	-	-
004-005417	MOTOR 3HP 1750RPM 230V-1P 182T 1-1/8	-	-	-	1	-
004-004869	MOTOR 5HP 1750RPM 230V-1P 184T 1-1/8	-	-	-	-	1
100-002486	KEY-MOTOR 1/4" X 1/4" X 1"	1	1	1	1	1
100-007397	MOTOR ADAPTER PLATE	1	-	-	-	-
100-007396	MOTOR PLATE TOP	1	1	1	1	1
100-002855	MOTOR PLATE BOT	1	1	1	1	1
040-002739	TCS 5/16-18UNC X 3/4	29	29	29	29	29
040-005321	BOLT WHIZ 5/16-18UNC X 3/4	120	150	190	300	375
040-001459	NUT WHIZ 5/16-18UNC	120	150	190	300	375
040-001483	BOLT WHIZ 3/8 -16UNC X 1	23	25	27	32	36
040-001440	BOLT WHIZ 3/8 -16UNC X 1 1/4	4	4	4	4	4
040-001460	NUT WHIZ 3/8 -16UNC	27	29	31	36	40

MODEL: _____LENGTH_____FT

SERIAL NO:____-____-____-_____-_____

SHIPPING LIST - GARNER ASSEMBLY - MSF/DP/DPSL MODELS

PARTS LISTED ARE FOR AUGERS W/ 1 1/4" SHAFTS

3P - DENOTES 240V/480V-3P DRYERS

W/ 8" OR W/O 8" INDICATES WITH OR WITHOUT 8" DIA FILLING HOLE

PART NUMBER	PART DESCRIPTION (FT)	3P 10	3P 15	3P 20	3P 25	3P 30	3P 40
400-009208	TOP ASS'Y 10FT W/ONE DOOR W/ 8"	1	-	-	-	-	-
400-009205	TOP ASS'Y 10FT W/ONE DOOR W/O 8"	-	1	1	1	1	1
200-002976	TOP ASS'Y 10FT INTERMEDIATE	-	-	-	1	1	2
200-OO5516	TOP ASS'Y 5FT REAR W/ 8"	-	1	-	1	-	-
200-002978	TOP ASS'Y 10FT REAR W/ 8"	-	-	1	-	1	1
400-007623	GARNER SIDE ASS'Y 5FT - 22"	-	2	-	2	-	-
400-007624	GARNER SIDE ASS'Y 10FT - 22"	2	2	4	4	6	8
100-002599	CROSS STRAP	2	2	4	4	6	8
100-002589	TOP GARNER SIDE STIFFENING BRACKET	2	2	4	4	6	8
100-007641	LADDER SUPPORT BRACKET	1	1	1	1	1	1
100-002852	END PLATE FRONT W/SWITCH	1	1	1	1	1	1
100-006819	END PLATE REAR STANDARD	1	1	1	1	1	-
100-006820	END PLATE REAR W/SWITCH 40FT	-	-	-	-	-	1
400-009196	ASS'Y LOW GRAIN SWITCH (MOTOR END)	1	1	1	1	1	1
400-009197	ASS'Y LOW GRAIN SWITCH (FILL END)	-	-	-	-	-	1
100-006824	AUGER HEAD PLATE FRONT	1	1	1	1	1	1
100-006825	AUGER HEAD PLATE REAR	1	1	1	1	1	1
200-006834	AUGER ONLY 10FT ONLY - 8"	1	-	-	-	-	-
200-006723	AUGER ONLY FRONT 1OFT - 8"	-	1	1	1	1	1
200-006724	AUGER ONLY INTER 10FT - 8"	-	-	-	1	1	2
200-006721	AUGER ONLY REAR 5FT - 8"	-	1	-	1	-	-
200-006720	AUGER ONLY REAR 10FT - 8"	-	-	1	-	1	1
100-006727	AUGER SHAFT 1 1/4" FT-KEYED	1	1	1	1	1	1
100-006726	AUGER SHAFT 1 1/4" INTER	-	1	1	2	2	3
100-006728	AUGER SHAFT 1 1/4" RE-NON-KEYED	1	1	1	1	1	1
040-005324	BOLT HEX 7/16-14UNC X 3"	4	8	8	12	12	16
040-006732	NUT -LOCK 7/16-14UNC	4	8	8	12	12	16
400-006827	AUGER SUPPORT HANGER ASS'Y - 8"	-	1	1	2	2	3
100-004700	TROUGH SUPPORT HANGER – 8"	1	-	-	-	-	-

MODEL: _____LENGTH_____FT

SERIAL NO:____-____-____-_____-_____

SHIPPING LIST - GARNER ASSEMBLY - MSF/DP/DPSL MODELS

PARTS LISTED ARE FOR AUGERS W/ 1 1/4" SHAFTS

3P - DENOTES 240V/480V-3P DRYERS

W/ 8" OR W/O 8" INDICATES WITH OR WITHOUT 8" DIA FILLING HOLE

PART NUMBER	PART DESCRIPTION (FT)		3P 10	3P 15	3P 20	3P 25	3P 30	3P 40
200-006992	AUGER TROUGH INTER 10FT - 8"		-	-	-	1	1	2
200-007002	AUGER TROUGH REAR 5FT - 8"		1	1	-	1	-	-
200-006993	AUGER TROUGH REAR 10FT - 8"		-	-	1	-	1	1
200-005388	BELT GUARD		1	1	1	1	1	1
100-003343	BELT GUARD BACK PLATE		1	1	1	1	1	1
049-003364	BELT "B82" 83.3PITCH		1	2	2	2	2	2
056-005370	SHEAVE AUGER 1B18.4		1	-	-	-	-	-
056-005372	SHEAVE AUGER 2B18.4		-	1	1	1	1	1
056-006830	BUSHING QD-SK 1-1/4		1	1	1	1	1	1
056-005371	SHEAVE MOTOR 1B3.4		1	-	-	-	-	-
056-005373	SHEAVE MOTOR 2B3.4		-	1	1	1	1	1
056-005375	BUSHING QD-SH 7/8		1	1	1	-	-	-
056-005376	BUSHING QD-SH 1-1/8		-	-	-	1	1	1
044-001510	AUGER BEARING W/FLANGE 1 1/4"		2	2	2	2	2	2
004-002355	MOTOR 1HP 1750RPM 240/480V-3P	143T 7/8	1	-	-	-	-	-
004-002673	MOTOR 2HP 1750RPM 240/480V-3P	145T 7/8	-	1	1	-	-	-
004-002671	MOTOR 3HP 1750RPM 240/480V-3P	182T 1-1/8	-	-	-	1	1	-
004-002672	MOTOR 5HP 1750RPM 240/480V-3P	184T 1-1/8	-	-	-	-	-	1
100-002486	KEY-MOTOR 1/4" X 1/4" X 1"		1	1	1	1	1	1
100-007397	MOTOR ADAPTER PLATE		1	1	1	-	-	-
100-007396	MOTOR PLATE TOP		1	1	1	1	1	1
100-002855	MOTOR PLATE BOT		1	1	1	1	1	1
040-002739	TCS 5/16-18UNC X 3/4		29	29	29	29	29	29
040-005321	BOLT WHIZ 5/16-18UNC X 3/4		120	150	190	230	300	375
040-001459	NUT WHIZ 5/16-18UNC		120	150	190	230	300	375
040-001483	BOLT WHIZ 3/8 -16UNC X 1		23	25	27	28	32	36
040-001440	BOLT WHIZ 3/8 -16UNC X 1 1/4		4	4	4	4	4	4
040-001460	NUT WHIZ 3/8 -16UNC		27	29	31	32	36	40

MODEL: _____LENGTH_____FT

SERIAL NO:____-____-____-_____-_____

SHIPPING LIST - GARNER ASSEMBLY - MSF/DP/DPSL MODELS

PARTS LISTED ARE FOR AUGERS W/ 1 1/4" SHAFTS

3P - DENOTES 380V-3P DRYERS

W/ 8" OR W/O 8" INDICATES WITH OR WITHOUT 8" DIA FILLING HOLE

PART NUMBER	PART DESCRIPTION (FT)	3P 10	3P 15	3P 20	3P 25	3P 30	3P 40
400-009208	TOP ASS'Y 10FT W/ONE DOOR W/ 8"	1	-	-	-	-	-
400-009205	TOP ASS'Y 10FT W/ONE DOOR W/O 8"	-	1	1	1	1	1
200-002976	TOP ASS'Y 10FT INTERMEDIATE	-	-	-	1	1	2
200-OO5516	TOP ASS'Y 5FT REAR W/ 8"	-	1	-	1	-	-
200-002978	TOP ASS'Y 10FT REAR W/ 8"	-	-	1	-	1	1
400-007623	GARNER SIDE ASS'Y 5FT - 22"	-	2	-	2	-	-
400-007624	GARNER SIDE ASS'Y 10FT - 22"	2	2	4	4	6	8
100-002599	CROSS STRAP	2	2	4	4	6	8
100-002589	TOP GARNER SIDE STIFFENING BRACKET	2	2	4	4	6	8
100-007641	LADDER SUPPORT BRACKET	1	1	1	1	1	1
100-002852	END PLATE FRONT W/SWITCH	1	1	1	1	1	1
100-006819	END PLATE REAR STANDARD	1	1	1	1	1	-
100-006820	END PLATE REAR W/SWITCH 40FT	-	-	-	-	-	1
400-009196	ASS'Y LOW GRAIN SWITCH (MOTOR END)	1	1	1	1	1	2
400-009197	ASS'Y LOW GRAIN SWITCH (FILL END)	1	1	1	1	1	2
100-006824	AUGER HEAD PLATE FRONT	1	1	1	1	1	1
100-006825	AUGER HEAD PLATE REAR	1	1	1	1	1	1
200-006834	AUGER ONLY 10FT ONLY - 8"	1	-	-	-	-	-
200-006723	AUGER ONLY FRONT 1OFT - 8"	-	1	1	1	1	1
200-006724	AUGER ONLY INTER 10FT - 8"	-	-	-	1	1	2
200-006721	AUGER ONLY REAR 5FT - 8"	-	1	-	1	-	-
200-006720	AUGER ONLY REAR 10FT - 8"	-	-	1	-	1	1
100-006727	AUGER SHAFT 1 1/4" FT-KEYED	1	1	1	1	1	1
100-006726	AUGER SHAFT 1 1/4" INTER	-	1	1	2	2	3
100-006728	AUGER SHAFT 1 1/4" RE-NON-KEYED	1	1	1	1	1	1
040-005324	BOLT HEX 7/16-14UNC X 3"	4	8	8	12	12	16
040-006732	NUT -LOCK 7/16-14UNC	4	8	8	12	12	16
400-006827	AUGER SUPPORT HANGER ASS'Y - 8"	-	1	1	2	2	3
100-004700	TROUGH SUPPORT HANGER – 8"	1	-	-	-	-	-

MODEL: _____LENGTH_____FT

SERIAL NO:____-____-____-_____-_____

SHIPPING LIST - GARNER ASSEMBLY - MSF/DP/DPSL MODELS

PARTS LISTED ARE FOR AUGERS W/ 1 1/4" SHAFTS

3P - DENOTES 380V-3P DRYERS

W/ 8" OR W/O 8" INDICATES WITH OR WITHOUT 8" DIA FILLING HOLE

PART NUMBER	PART DESCRIPTION (FT)	3P 10	3P 15	3P 20	3P 25	3P 30	3P 40
200-006992	AUGER TROUGH INTER 10FT - 8"	-	-	-	1	1	2
200-007002	AUGER TROUGH REAR 5FT - 8"	1	1	-	1	-	-
200-006993	AUGER TROUGH REAR 10FT - 8"	-	-	1	-	1	1
200-005388	BELT GUARD	1	1	1	1	1	1
100-003343	BELT GUARD BACK PLATE	1	1	1	1	1	1
049-007874	BELT "B76" 77.8PITCH	1	2	2	2	2	2
056-007871	SHEAVE AUGER 1B15.4	1	-	-	-	-	-
056-007872	SHEAVE AUGER 2B15.4	-	1	1	1	1	1
056-006830	BUSHING QD-SK 1-1/4	1	1	1	1	1	1
056-005371	SHEAVE MOTOR 1B3.4	1	-	-	-	-	-
056-005373	SHEAVE MOTOR 2B3.4	-	1	1	1	1	1
056-005375	BUSHING QD-SH 7/8	1	1	1	-	-	-
056-005376	BUSHING QD-SH 1-1/8	-	-	-	1	1	1
044-001510	AUGER BEARING W/FLANGE 1 1/4"	2	2	2	2	2	2
004-007853	MOTOR 1HP 1450RPM 380V-3P 143T 7/8	1	-	-	-	-	-
004-007854	MOTOR 2HP 1450RPM 380V-3P 145T 7/8	-	1	1	-	-	-
004-007855	MOTOR 3HP 1450RPM 380V-3P 182T 1-1/8	-	-	-	1	1	-
004-007629	MOTOR 5HP 1450RPM 380V-3P 184T 1-1/8	-	-	-	-	-	1
100-002486	KEY-MOTOR 1/4" X 1/4" X 1"	1	1	1	1	1	1
100-007397	MOTOR ADAPTER PLATE	1	1	1	-	-	-
100-007396	MOTOR PLATE TOP	1	1	1	1	1	1
100-002855	MOTOR PLATE BOT	1	1	1	1	1	1
040-002739	TCS 5/16-18UNC X 3/4	29	29	29	29	29	29
040-005321	BOLT WHIZ 5/16-18UNC X 3/4	120	150	190	230	300	375
040-001459	NUT WHIZ 5/16-18UNC	120	150	190	230	300	375
040-001483	BOLT WHIZ 3/8 -16UNC X 1	23	25	27	28	32	36
040-001440	BOLT WHIZ 3/8 -16UNC X 1 1/4	4	4	4	4	4	4
040-001460	NUT WHIZ 3/8 -16UNC	27	29	31	32	36	40

MODEL: _____LENGTH_____FT

SERIAL NO:____-____-____-_____-_____

SHIPPING LIST - GARNER ASSEMBLY - MSF/DP/DPSL MODELS

PARTS LISTED ARE FOR AUGERS W/ 1 1/4" SHAFTS

3P - DENOTES 575V-3P DRYERS

W/ 8" OR W/O 8" INDICATES WITH OR WITHOUT 8" DIA FILLING HOLE

PART NUMBER	PART DESCRIPTION (FT)	3P 10	3P 15	3P 20	3P 25	3P 30	3P 40
400-009208	TOP ASS'Y 10FT W/ONE DOOR W/ 8"	1	-	-	-	-	-
400-009205	TOP ASS'Y 10FT W/ONE DOOR W/O 8"	-	1	1	1	1	1
200-002976	TOP ASS'Y 10FT INTERMEDIATE	-	-	-	1	1	2
200-OO5516	TOP ASS'Y 5FT REAR W/ 8"	-	1	-	1	-	-
200-002978	TOP ASS'Y 10FT REAR W/ 8"	-	-	1	-	1	1
400-007623	GARNER SIDE ASS'Y 5FT - 22"	-	2	-	2	-	-
400-007624	GARNER SIDE ASS'Y 10FT - 22"	2	2	4	4	6	8
100-002599	CROSS STRAP	2	2	4	4	6	8
100-002589	TOP GARNER SIDE STIFFENING BRACKET	2	2	4	4	6	8
100-007641	LADDER SUPPORT BRACKET	1	1	1	1	1	1
100-002852	END PLATE FRONT W/SWITCH	1	1	1	1	1	1
100-006819	END PLATE REAR STANDARD	1	1	1	1	1	-
100-006820	END PLATE REAR W/SWITCH 40FT	-	-	-	-	-	1
400-009196	ASS'Y LOW GRAIN SWITCH (MOTOR END)	1	1	1	1	1	2
400-009197	ASS'Y LOW GRAIN SWITCH (FILL END)	-	-	-	-	-	1
100-006824	AUGER HEAD PLATE FRONT	1	1	1	1	1	1
100-006825	AUGER HEAD PLATE REAR	1	1	1	1	1	1
200-006834	AUGER ONLY 10FT ONLY - 8"	1	-	-	-	-	-
200-006723	AUGER ONLY FRONT 1OFT - 8"	-	1	1	1	1	1
200-006724	AUGER ONLY INTER 10FT - 8"	-	-	-	1	1	2
200-006721	AUGER ONLY REAR 5FT - 8"	-	1	-	1	-	-
200-006720	AUGER ONLY REAR 10FT - 8"	-	-	1	-	1	1
100-006727	AUGER SHAFT 1 1/4" FT-KEYED	1	1	1	1	1	1
100-006726	AUGER SHAFT 1 1/4" INTER	-	1	1	2	2	3
100-006728	AUGER SHAFT 1 1/4" RE-NON-KEYED	1	1	1	1	1	1
040-005324	BOLT HEX 7/16-14UNC X 3"	4	8	8	12	12	16
040-006732	NUT -LOCK 7/16-14UNC	4	8	8	12	12	16
400-006827	AUGER SUPPORT HANGER ASS'Y - 8"	-	1	1	2	2	3
100-004700	TROUGH SUPPORT HANGER – 8"	1	-	-	-	-	-

MODEL: _____LENGTH_____FT

SERIAL NO:____-____-____-_____-_____

SHIPPING LIST - GARNER ASSEMBLY - MSF/DP/DPSL MODELS

PARTS LISTED ARE FOR AUGERS W/ 1 1/4" SHAFTS

3P - DENOTES 575V-3P DRYERS

W/ 8" OR W/O 8" INDICATES WITH OR WITHOUT 8" DIA FILLING HOLE

PART NUMBER	PART DESCRIPTION (FT)	3P 10	3P 15	3P 20	3P 25	3P 30	3P 40
200-006992	AUGER TROUGH INTER 10FT - 8"	-	-	-	1	1	2
200-007002	AUGER TROUGH REAR 5FT - 8"	1	1	-	1	-	-
200-006993	AUGER TROUGH REAR 10FT - 8"	-	-	1	-	1	1
200-005388	BELT GUARD	1	1	1	1	1	1
100-003343	BELT GUARD BACK PLATE	1	1	1	1	1	1
049-003364	BELT "B82" 83.3PITCH	1	2	2	2	2	2
056-005370	SHEAVE AUGER 1B18.4	1	-	-	-	-	-
056-005372	SHEAVE AUGER 2B18.4	-	1	1	1	1	1
056-006830	BUSHING QD-SK 1-1/4	1	1	1	1	1	1
056-005371	SHEAVE MOTOR 1B3.4	1	-	-	-	-	-
056-005373	SHEAVE MOTOR 2B3.4	-	1	1	1	1	1
056-005375	BUSHING QD-SH 7/8	1	1	1	-	-	-
056-005376	BUSHING QD-SH 1-1/8	-	-	-	1	1	1
044-001510	AUGER BEARING W/FLANGE 1 1/4"	2	2	2	2	2	2
004-007630	MOTOR 1HP 1750RPM 575V-3P 143T 7/8	1	-	-	-	-	-
004-007425	MOTOR 2HP 1750RPM 575V-3P 145T 7/8	-	1	1	-	-	-
004-007615	MOTOR 3HP 1750RPM 575V-3P 182T 1-1/8	-	-	-	1	1	-
004-007629	MOTOR 5HP 1750RPM 575V-3P 184T 1-1/8	-	-	-	-	-	1
100-002486	KEY-MOTOR 1/4" X 1/4" X 1"	1	1	1	1	1	1
100-007397	MOTOR ADAPTER PLATE	1	1	1	-	-	-
100-007396	MOTOR PLATE TOP	1	1	1	1	1	1
100-002855	MOTOR PLATE BOT	1	1	1	1	1	1
040-002739	TCS 5/16-18UNC X 3/4	29	29	29	29	29	29
040-005321	BOLT WHIZ 5/16-18UNC X 3/4	120	150	190	230	300	375
040-001459	NUT WHIZ 5/16-18UNC	120	150	190	230	300	375
040-001483	BOLT WHIZ 3/8 -16UNC X 1	23	25	27	28	32	36
040-001440	BOLT WHIZ 3/8 -16UNC X 1 1/4	4	4	4	4	4	4
040-001460	NUT WHIZ 3/8 -16UNC	27	29	31	32	36	40

MODEL:_____LENGTH_____FT

SERIAL NO:____-____-___-_____-_____

SHIPPING LIST - GARNER ASSEMBLY - DPX/DPXSL MODELS

PARTS LISTED ARE FOR AUGERS W/ 1 1/4" SHAFTS

3P – DENOTES 240V/480V-3P DRYERS

W/ 8" OR W/O 8" INDICATES WITH OR WITHOUT 8" DIA FILLING HOLE

PART NUMBER	PART DESCRIPTION	(FT) 10	15	20	25	30	40
400-009211	TOP ASS'Y 10FT W/TWO DOORS W/ 8"	1	-	-	-	-	-
400-009205	TOP ASS'Y 10FT W/ONE DOOR W/O 8"	-	1	1	1	1	1
200-002976	TOP ASS'Y 10FT INTERMEDIATE	-	-	-	1	1	2
400-009220	TOP ASS'Y 5FT W/REAR DOOR W/ 8"	-	1	-	1	-	-
400-009221	TOP ASS'Y 10FT W/REAR DOOR W/ 8"	-	-	1	-	1	1
400-007623	GARNER SIDE ASS'Y 5FT - 22"	-	2	-	2	-	-
400-007624	GARNER SIDE ASS'Y 10FT - 22"	2	2	4	4	6	8
100-002599	CROSS STRAP	2	2	4	4	6	8
100-002589	TOP GARNER SIDE STIFFENING BRACKET	2	2	4	4	6	8
100-002852	END PLATE FRONT W/SWITCH	1	1	1	1	1	-
100-006819	END PLATE REAR STANDARD	1	1	1	1	1	-
100-006821	END PLATE FRONT W/SWITCH 40FT	-	-	-	-	-	1
100-006822	END PLATE REAR W/SWITCH 40FT	-	-	-	-	-	1
400-009196	ASS'Y LOW GRAIN SWITCH (MOTOR END)	1	1	1	1	1	1
400-009197	ASS'Y LOW GRAIN SWITCH (FILL END)	-	-	-	-	-	1
100-006824	AUGER HEAD PLATE FRONT - 8"	1	1	1	1	1	-
100-006825	AUGER HEAD PLATE REAR - 8"	1	1	1	1	1	-
100-006770	AUGER HEAD PLATE FRONT - 10"	-	-	-	-	-	1
100-006771	AUGER HEAD PLATE REAR - 10"	-	-	-	-	-	1
200-006834	AUGER ONLY 10FT ONLY - 8"	1	-	-	-	-	-
200-006723	AUGER ONLY FRONT 1OFT - 8"	-	1	1	1	1	-
200-006724	AUGER ONLY INTER 10FT - 8"	-	-	-	1	1	-
200-006721	AUGER ONLY REAR 5FT - 8"	-	1	-	1	-	-
200-006720	AUGER ONLY REAR 10FT - 8"	-	-	-	-	1	-
200-006794	AUGER ONLY FRONT 1OFT - 10"	-	-	-	-	-	1
200-006793	AUGER ONLY INTER 10FT - 10"	-	-	-	-	-	2
200-006792	AUGER ONLY REAR 10FT - 10"	-	-	-	-	-	1
100-006727	AUGER SHAFT 1 1/4" FT-KEYED	1	1	1	1	1	1
100-006726	AUGER SHAFT 1 1/4" INTER	-	1	1	2	2	3
100-006728	AUGER SHAFT 1 1/4" RE-NON-KEYED	1	1	1	1	1	1
040-005324	BOLT-HEX 7/16-14UNC X 3"	4	6	8	12	12	16
040-006732	NUT -LOCK 7/16-14UNC	4	6	8	12	12	16
400-006827	AUGER SUPPORT HANGER ASS'Y - 8"	-	1	1	2	2	-
400-006829	AUGER SUPPORT HANGER ASS'Y - 10"	-	-	-	-	-	3

MODEL:_____LENGTH_____FT

SERIAL NO:____-____-___-_____-_____

SHIPPING LIST - GARNER ASSEMBLY - DPX/DPXSL MODELS

PARTS LISTED ARE FOR AUGERS W/ 1 1/4" SHAFTS

3P – DENOTES 240V/480V-3P DRYERS

W/ 8" OR W/O 8" INDICATES WITH OR WITHOUT 8" DIA FILLING HOLE

PART NUMBER	PART DESCRIPTION	(FT)	10	15	20	25	30	40
200-006992	AUGER TROUGH INTER 10FT - 8"		-	-	1	1	1	-
200-007002	AUGER TROUGH REAR 5FT - 8"		1	1	-	1	-	-
200-006993	AUGER TROUGH REAR 10FT - 8"		-	-	1	-	1	-
200-006999	AUGER TROUGH INTER 10FT - 10"		-	-	-	-	-	2
200-007000	AUGER TROUGH REAR 10FT - 10"		-	-	-	-	-	1
200-005388	BELT GUARD - 8″		1	1	1	1	1	-
100-003343	BELT GUARD BACK PLATE - 8″		1	1	1	1	1	-
200-006817	BELT GUARD - 10″		-	-	-	-	-	1
100-006818	BELT GUARD BACK PLATE - 10″		-	-	-	-	-	1
049-003364	BELT "B82" 83.3PITCH		1	2	2	2	2	3
056-005370	SHEAVE AUGER 1B18.4		1	-	-	-	-	-
056-005372	SHEAVE AUGER 2B18.4		-	1	1	1	1	-
056-006832	SHEAVE AUGER 3B18.4		-	-	-	-	-	1
056-006830	BUSHING QD-SK 1 1/4		1	1	1	1	1	1
056-005371	SHEAVE MOTOR 1B3.4		1	-	-	-	-	-
056-005373	SHEAVE MOTOR 2B3.4		-	1	1	1	1	-
056-006833	SHEAVE MOTOR 3B3.4		-	-	-	-	-	1
056-005375	BUSHING QD-SH 7/8		1	1	1	-	-	-
056-005376	BUSHING QD-SH 1-1/8		-	-	-	1	1	-
056-006344	BUSHING QD-SH 1-3/8		-	-	-	-	-	1
044-001510	AUGER BEARING W/FLANGE 1 1/4"		2	2	2	2	2	2
004-002355	MOTOR 1HP 1750RPM 240/480V-3P 143T	7/8	1	-	-	-	-	-
004-002673	MOTOR 2HP 1750RPM 240/480V-3P 145T	7/8	-	1	1	-	-	-
004-002671	MOTOR 3HP 1750RPM 240/480V-3P 182T	1-1/8	-	-	-	1	1	-
004-002675	MOTOR 10HP 1750RPM 240/480V-3P 215T	1-3/8	-	-	-	-	-	1
100-002486	KEY-MOTOR 1/4" X 1/4" X 1"		1	1	1	1	1	
100-007397	MOTOR ADAPTER PLATE		1	1	1	-	-	-
100-007396	MOTOR PLATE TOP 1-5HP		1	1	1	1	1	-
100-002855	MOTOR PLATE BOT 1-5HP		1	1	1	1	1	-
100-006740	MOTOR PLATE TOP 10HP		-	-	-	-	-	1
100-006741	MOTOR PLATE BOT 10HP		-	-	-	-	-	1
040-002739	TCS 5/16-18UNC X 3/4		22	22	22	22	22	22
040-005321	BOLT WHIZ 5/16-18UNC X 3/4		114	144	184	224	294	364
040-001459	NUT WHIZ 5/16-18UNC		114	144	184	224	294	364
040-001483	BOLT WHIZ 3/8 -16UNC X 1		20	22	24	28	32	36
040-001440	BOLT WHIZ 3/8 -16UNC X 1 1/4		4	4	4	4	4	4
040-001460	NUT WHIZ 3/8 -16UNC		24	26	28	32	36	40

S-G-DPX-380V

MODEL:_____LENGTH_____FT

SERIAL NO:____-____-___-_____-_____

SHIPPING LIST - GARNER ASSEMBLY - DPX/DPXSL MODELS

PARTS LISTED ARE FOR AUGERS W/ 1 1/4" SHAFTS

3P – DENOTES 380V-3P DRYERS

W/ 8" OR W/O 8" INDICATES WITH OR WITHOUT 8" DIA FILLING HOLE

PART NUMBER	PART DESCRIPTION	(FT) 10	15	20	25	30	40
400-009211	TOP ASS'Y 10FT W/TWO DOORS W/ 8"	1	-	-	-	-	-
400-009205	TOP ASS'Y 10FT W/ONE DOOR W/O 8"	-	1	1	1	1	1
200-002976	TOP ASS'Y 10FT INTERMEDIATE	-	-	-	1	1	2
400-009220	TOP ASS'Y 5FT W/REAR DOOR W/ 8"	-	1	-	1	-	-
400-009221	TOP ASS'Y 10FT W/REAR DOOR W/ 8"	-	-	1	-	1	1
400-007623	GARNER SIDE ASS'Y 5FT - 22"	-	2	-	2	-	-
400-007624	GARNER SIDE ASS'Y 10FT - 22"	2	2	4	4	6	8
100-002599	CROSS STRAP	2	2	4	4	6	8
100-002589	TOP GARNER SIDE STIFFENING BRACKET	2	2	4	4	6	8
100-002852	END PLATE FRONT W/SWITCH	1	1	1	1	1	-
100-006819	END PLATE REAR STANDARD	1	1	1	1	1	-
100-006821	END PLATE FRONT W/SWITCH 40FT	-	-	-	-	-	1
100-006822	END PLATE REAR W/SWITCH 40FT	-	-	-	-	-	1
400-009196	ASS'Y LOW GRAIN SWITCH (MOTOR END)	1	1	1	1	1	1
400-009197	ASS'Y LOW GRAIN SWITCH (FILL END)	-	-	-	-	-	1
100-006824	AUGER HEAD PLATE FRONT - 8"	1	1	1	1	1	-
100-006825	AUGER HEAD PLATE REAR - 8"	1	1	1	1	1	-
100-006770	AUGER HEAD PLATE FRONT - 10"	-	-	-	-	-	1
100-006771	AUGER HEAD PLATE REAR - 10"	-	-	-	-	-	1
200-006834	AUGER ONLY 10FT ONLY - 8"	1	-	-	-	-	-
200-006723	AUGER ONLY FRONT 1OFT - 8"	-	1	1	1	1	-
200-006724	AUGER ONLY INTER 10FT - 8"	-	-	-	1	1	-
200-006721	AUGER ONLY REAR 5FT - 8"	-	1	-	1	-	-
200-006720	AUGER ONLY REAR 10FT - 8"	-	-	-	-	1	-
200-006794	AUGER ONLY FRONT 1OFT - 10"	-	-	-	-	-	1
200-006793	AUGER ONLY INTER 10FT - 10"	-	-	-	-	-	2
200-006792	AUGER ONLY REAR 10FT - 10"	-	-	-	-	-	1
100-006727	AUGER SHAFT 1 1/4" FT-KEYED	1	1	1	1	1	1
100-006726	AUGER SHAFT 1 1/4" INTER	-	1	1	2	2	3
100-006728	AUGER SHAFT 1 1/4" RE-NON-KEYED	1	1	1	1	1	1
040-005324	BOLT-HEX 7/16-14UNC X 3"	4	6	8	12	12	16
040-006732	NUT -LOCK 7/16-14UNC	4	6	8	12	12	16
400-006827	AUGER SUPPORT HANGER ASS'Y - 8"	-	1	1	2	2	-
400-006829	AUGER SUPPORT HANGER ASS'Y - 10"	-	-	-	-	-	3

MODEL:_____LENGTH_____FT

SERIAL NO:____-____-___-_____-_____

SHIPPING LIST - GARNER ASSEMBLY - DPX/DPXSL MODELS

PARTS LISTED ARE FOR AUGERS W/ 1 1/4" SHAFTS

3P – DENOTES 380V-3P DRYERS

W/ 8" OR W/O 8" INDICATES WITH OR WITHOUT 8" DIA FILLING HOLE

PART NUMBER	PART DESCRIPTION	(FT) 10	15	20	25	30	40
200-006992	AUGER TROUGH INTER 10FT - 8"	-	-	1	1	1	-
200-007002	AUGER TROUGH REAR 5FT - 8"	1	1	-	1	-	-
200-006993	AUGER TROUGH REAR 10FT - 8"	-	-	1	-	1	-
200-006999	AUGER TROUGH INTER 10FT - 10"	-	-	-	-	-	2
200-007000	AUGER TROUGH REAR 10FT - 10"	-	-	-	-	-	1
200-005388	BELT GUARD - 8″	1	1	1	1	1	-
100-003343	BELT GUARD BACK PLATE - 8″	1	1	1	1	1	-
200-006817	BELT GUARD - 10″	-	-	-	-	-	1
100-006818	BELT GUARD BACK PLATE - 10″	-	-	-	-	-	1
049-007874	BELT "B76" 77.8PITCH	1	2	2	2	2	3
056-007871	SHEAVE AUGER 1B15.4	1	-	-	-	-	-
056-007872	SHEAVE AUGER 2B15.4	-	1	1	1	1	-
056-007873	SHEAVE AUGER 3B15.4	-	-	-	-	-	1
056-006830	BUSHING QD-SK 1-1/4	1	1	1	1	1	1
056-005371	SHEAVE MOTOR 1B3.4	1	-	-	-	-	-
056-005373	SHEAVE MOTOR 2B3.4	-	1	1	1	1	-
056-006833	SHEAVE MOTOR 3B3.4	-	-	-	-	-	1
056-005375	BUSHING QD-SH 7/8	1	1	1	-	-	-
056-005376	BUSHING QD-SH 1-1/8	-	-	-	1	1	-
056-006344	BUSHING QD-SH 1-3/8	-	-	-	-	-	1
044-001510	AUGER BEARING W/FLANGE 1 1/4"	2	2	2	2	2	2
004-007853	MOTOR 1HP 1450RPM 380V-3P 143T 7/8	1	-	-	-	-	-
004-007854	MOTOR 2HP 1450RPM 380V-3P 145T 7/8	-	1	1	-	-	-
004-007855	MOTOR 3HP 1450RPM 380V-3P 182T 1-1/8	-	-	-	1	1	-
004-007857	MOTOR 10HP 1450RPM 380V-3P 215T 1-3/8	-	-	-	-	-	1
100-002486	KEY-MOTOR 1/4" X 1/4" X 1"	1	1	1	1	1	1
100-007397	MOTOR ADAPTER PLATE	1	1	1	-	-	-
100-007396	MOTOR PLATE TOP 1-5HP	1	1	1	1	1	-
100-002855	MOTOR PLATE BOT 1-5HP	1	1	1	1	1	-
100-006740	MOTOR PLATE TOP 10HP	-	-	-	-	-	1
100-006741	MOTOR PLATE BOT 10HP	-	-	-	-	-	1
040-002739	TCS 5/16-18UNC X 3/4	22	22	22	22	22	22
040-005321	BOLT WHIZ 5/16-18UNC X 3/4	114	144	184	224	294	364
040-001459	NUT WHIZ 5/16-18UNC	114	144	184	224	294	364
040-001483	BOLT WHIZ 3/8 -16UNC X 1	20	22	24	28	34	40
040-001440	BOLT WHIZ 3/8 -16UNC X 1 1/4	4	4	4	4	4	4
040-001460	NUT WHIZ 3/8 -16UNC	24	26	28	32	36	40

MODEL:_____LENGTH_____FT

SERIAL NO:____-____-___-_____-_____

SHIPPING LIST - GARNER ASSEMBLY - DPX/DPXSL MODELS

PARTS LISTED ARE FOR AUGERS W/ 1 1/4" SHAFTS

3P – DENOTES 575V-3P DRYERS

W/ 8" OR W/O 8" INDICATES WITH OR WITHOUT 8" DIA FILLING HOLE

PART NUMBER	PART DESCRIPTION	(FT) 10	15	20	25	30	40
400-009211	TOP ASS'Y 10FT W/TWO DOORS W/ 8"	1	-	-	-	-	-
400-009205	TOP ASS'Y 10FT W/ONE DOOR W/O 8"	-	1	1	1	1	1
200-002976	TOP ASS'Y 10FT INTERMEDIATE	-	-	-	1	1	2
400-009220	TOP ASS'Y 5FT W/REAR DOOR W/ 8"	-	1	-	1	-	-
400-009221	TOP ASS'Y 10FT W/REAR DOOR W/ 8"	-	-	1	-	1	1
400-007623	GARNER SIDE ASS'Y 5FT - 22"	-	2	-	2	-	-
400-007624	GARNER SIDE ASS'Y 10FT - 22"	2	2	4	4	6	8
100-002599	CROSS STRAP	2	2	4	4	6	8
100-002589	TOP GARNER SIDE STIFFENING BRACKET	2	2	4	4	6	8
100-002852	END PLATE FRONT W/SWITCH	1	1	1	1	1	-
100-006819	END PLATE REAR STANDARD	1	1	1	1	1	-
100-006821	END PLATE FRONT W/SWITCH 40FT	-	-	-	-	-	1
100-006822	END PLATE REAR W/SWITCH 40FT	-	-	-	-	-	1
400-009196	ASS'Y LOW GRAIN SWITCH (MOTOR END)	1	1	1	1	1	1
400-009197	ASS'Y LOW GRAIN SWITCH (FILL END)	-	-	-	-	-	1
100-006824	AUGER HEAD PLATE FRONT - 8"	1	1	1	1	1	-
100-006825	AUGER HEAD PLATE REAR - 8"	1	1	1	1	1	-
100-006770	AUGER HEAD PLATE FRONT - 10"	-	-	-	-	-	1
100-006771	AUGER HEAD PLATE REAR - 10"	-	-	-	-	-	1
200-006834	AUGER ONLY 10FT ONLY - 8"	1	-	-	-	-	-
200-006723	AUGER ONLY FRONT 1OFT - 8"	-	1	1	1	1	-
200-006724	AUGER ONLY INTER 10FT - 8"	-	-	-	1	1	-
200-006721	AUGER ONLY REAR 5FT - 8"	-	1	-	1	-	-
200-006720	AUGER ONLY REAR 10FT - 8"	-	-	-	-	1	-
200-006794	AUGER ONLY FRONT 1OFT - 10"	-	-	-	-	-	1
200-006793	AUGER ONLY INTER 10FT - 10"	-	-	-	-	-	2
200-006792	AUGER ONLY REAR 10FT - 10"	-	-	-	-	-	1
100-006727	AUGER SHAFT 1 1/4" FT-KEYED	1	1	1	1	1	1
100-006726	AUGER SHAFT 1 1/4" INTER	-	1	1	2	2	3
100-006728	AUGER SHAFT 1 1/4" RE-NON-KEYED	1	1	1	1	1	1
040-005324	BOLT-HEX 7/16-14UNC X 3"	4	6	8	12	12	16
040-006732	NUT -LOCK 7/16-14UNC	4	6	8	12	12	16
400-006827	AUGER SUPPORT HANGER ASS'Y - 8"	-	1	1	2	2	-
400-006829	AUGER SUPPORT HANGER ASS'Y - 10"	-	-	-	-	-	3

MODEL:_____LENGTH_____FT

SERIAL NO:____-____-___-_____-_____

SHIPPING LIST - GARNER ASSEMBLY - DPX/DPXSL MODELS

PARTS LISTED ARE FOR AUGERS W/ 1 1/4" SHAFTS

3P – DENOTES 575V-3P DRYERS

W/ 8" OR W/O 8" INDICATES WITH OR WITHOUT 8" DIA FILLING HOLE

PART NUMBER	PART DESCRIPTION	(FT) 10	15	20	25	30	40
200-006992	AUGER TROUGH INTER 10FT - 8"	-	-	1	1	1	-
200-007002	AUGER TROUGH REAR 5FT - 8"	1	1	-	1	-	-
200-006993	AUGER TROUGH REAR 10FT - 8"	-	-	1	-	1	-
200-006999	AUGER TROUGH INTER 10FT - 10"	-	-	-	-	-	2
200-007000	AUGER TROUGH REAR 10FT - 10"	-	-	-	-	-	1
200-005388	BELT GUARD - 8″	1	1	1	1	1	-
100-003343	BELT GUARD BACK PLATE - 8″	1	1	1	1	1	-
200-006817	BELT GUARD - 10″	-	-	-	-	-	1
100-006818	BELT GUARD BACK PLATE - 10″	-	-	-	-	-	1
049-003364	BELT "B82" 83.3PITCH	1	2	2	2	2	3
056-005370	SHEAVE AUGER 1B18.4	1	-	-	-	-	-
056-005372	SHEAVE AUGER 2B18.4	-	1	1	1	1	-
056-006832	SHEAVE AUGER 3B18.4	-	-	-	-	-	1
056-006830	BUSHING QD-SK 1 1/4	1	1	1	1	1	1
056-005371	SHEAVE MOTOR 1B3.4	1	-	-	-	-	-
056-005373	SHEAVE MOTOR 2B3.4	-	1	1	1	1	-
056-006833	SHEAVE MOTOR 3B3.4	-	-	-	-	-	1
056-005375	BUSHING QD-SH 7/8	1	1	1	-	-	-
056-005376	BUSHING QD-SH 1-1/8	-	-	-	1	1	-
056-006344	BUSHING QD-SH 1-3/8	-	-	-	-	-	1
044-001510	AUGER BEARING W/FLANGE 1 1/4"	2	2	2	2	2	2
004-007630	MOTOR 1HP 1750RPM 575V-3P 143T 7/8	1	-	-	-	-	-
004-007425	MOTOR 2HP 1750RPM 575V-3P 145T 7/8	-	1	1	-	-	-
004-007615	MOTOR 3HP 1750RPM 575V-3P 182T 1-1/8	-	-	-	1	1	-
004-007570	MOTOR 10HP 1750RPM 575V-3P 215T 1-3/8	-	-	-	-	-	1
100-002486	KEY-MOTOR 1/4" X 1/4" X 1"	1	1	1	1	1	1
100-007397	MOTOR ADAPTER PLATE	1	1	1	-	-	-
100-007396	MOTOR PLATE TOP 1-5HP	1	1	1	1	1	-
100-002855	MOTOR PLATE BOT 1-5HP	1	1	1	1	1	-
100-006740	MOTOR PLATE TOP 10HP	-	-	-	-	-	1
100-006741	MOTOR PLATE BOT 10HP	-	-	-	-	-	1
040-002739	TCS 5/16-18UNC X 3/4	22	22	22	22	22	22
040-005321	BOLT WHIZ 5/16-18UNC X 3/4	114	144	184	224	294	364
040-001459	NUT WHIZ 5/16-18UNC	114	144	184	224	294	364
040-001483	BOLT WHIZ 3/8 -16UNC X 1	20	22	24	28	34	40
040-001440	BOLT WHIZ 3/8 -16UNC X 1 1/4	4	4	4	4	4	4
040-001460	NUT WHIZ 3/8 -16UNC	24	26	28	32	36	40

MODEL:_____LENGTH____FT

SERIAL NO:____-____-___-_____-_____

SHIPPING LIST - GARNER ASSEMBLY - DPX4T/DPX8T

PARTS LISTED ARE FOR AUGERS W/ 1 1/4" SHAFTS

3P – DENOTES 240V/480V-3P DRYERS

W/ 8" OR W/O 8" INDICATES WITH OR WITHOUT 8" DIA FILLING HOLE

PART NUMBER	PART DESCRIPTION	(FT)	10	15	20	25	30	40
400-009211	TOP ASS'Y 10FT W/TWO DOOR W/ 8"		1	-	-	-	-	-
400-009205	TOP ASS'Y 10FT W/ONE DOOR W/O 8"		-	1	1	1	1	1
200-002976	TOP ASS'Y INTERMEDIATE		-	-	-	1	1	2
400-009220	TOP ASS'Y 5FT REAR ONE DOOR W/ 8"		-	1	-	1	-	-
400-009221	TOP ASS'Y 10FT REAR ONE DOOR W/ 8"		-	-	1	-	1	1
400-006579	GARNER SIDE ASS'Y 5FT - 34"		-	2	-	2	-	-
400-006578	GARNER SIDE ASS'Y 10FT - 34"		2	2	4	4	6	8
100-002599	CROSS STRAP		3	3	6	6	9	12
100-007363	TOP GARNER SIDE STIFFENING BRACKET 34″		2	2	4	4	6	8
100-006580	END PLATE FRONT W/SWITCH - 34"		1	1	1	1	1	-
100-006823	END PLATE REAR STANDARD - 34"		1	1	1	1	1	-
100-006772	END PLATE FRONT W/SWITCH 40FT		-	-	-	-	-	1
100-006773	END PLATE REAR W/SWITCH 40FT		-	-	-	-	-	1
400-009196	ASS'Y LOW GRAIN SWITCH (MOTOR END)		1	1	1	1	1	1
400-009197	ASS'Y LOW GRAIN SWITCH (FILL END)		-	-	-	-	-	1
100-006824	AUGER HEAD PLATE FRONT 8″		1	1	1	1	1	-
100-006825	AUGER HEAD PLATE REAR 8″		1	1	1	1	1	-
100-006770	AUGER HEAD PLATE FRONT 10″		-	-	-	-	-	1
100-006771	AUGER HEAD PLATE REAR 10″		-	-	-	-	-	1
200-006834	AUGER ONLY 10FT ONLY - 8"		1	-	-	-	-	-
200-006723	AUGER ONLY FRONT 1OFT - 8"		-	1	1	1	1	-
200-006724	AUGER ONLY INTER 10FT - 8"		-	-	-	1	1	-
200-006721	AUGER ONLY REAR 5FT - 8"		-	1	-	1	-	-
200-006720	AUGER ONLY REAR 10FT - 8"		-	-	1	-	1	-
200-006794	AUGER ONLY FRONT 1OFT - 10"		-	-	-	-	-	1
200-006793	AUGER ONLY INTER 10FT - 10"		-	-	-	-	-	2
200-006792	AUGER ONLY REAR 10FT - 10"		-	-	-	-	-	1
100-006727	AUGER SHAFT 1 1/4" FT-KEYED		1	1	1	1	1	1
100-006726	AUGER SHAFT 1 1/4" INTER		-	1	1	2	2	3
100-006728	AUGER SHAFT 1 1/4" RE-NON-KEYED		1	1	1	1	1	1
040-005324	BOLT-HEX 7/16-14UNC X 3"		4	6	8	12	12	16
040-006732	NUT -LOCK 7/16-14UNC		4	6	8	12	12	16
400-006827	AUGER SUPPORT HANGER ASS'Y - 8"		-	1	1	2	2	-
400-006829	AUGER SUPPORT HANGER ASS'Y - 10"		-	-	-	-	-	3

MODEL:_____LENGTH_____FT

SERIAL NO:____-____-___-_____-_____

SHIPPING LIST - GARNER ASSEMBLY - DPX4T/DPX8T

PARTS LISTED ARE FOR AUGERS W/ 1 1/4" SHAFTS

3P – DENOTES 240V/480V-3P DRYERS

W/ 8" OR W/O 8" INDICATES WITH OR WITHOUT 8" DIA FILLING HOLE

PART NUMBER	PART DESCRIPTION	(FT)	10	15	20	25	30	40
200-006992	AUGER TROUGH INTER 10FT - 8		-	-	-	1	1	-
200-007002	AUGER TROUGH REAR 5FT - 8		-	1	-	1	-	-
200-006993	AUGER TROUGH REAR 10FT - 8		-	-	1	-	1	-
200-006999	AUGER TROUGH INTER 10FT - 10"		-	-	-	-	-	2
200-007000	AUGER TROUGH REAR 10FT - 10"		-	-	-	-	-	1
200-005388	BELT GUARD - 8″		1	1	1	1	1	-
100-003343	BELT GUARD BACK PLATE - 8″		1	1	1	1	1	-
200-006817	BELT GUARD - 10″		-	-	-	-	-	1
100-006818	BELT GUARD BACK PLATE - 10″		-	-	-	-	-	1
049-003364	BELT "B82" 83.3PITCH		2	2	2	2	2	3
056-005372	SHEAVE AUGER 2B18.4		1	1	1	1	1	-
056-006832	SHEAVE AUGER 3B18.4		-	-	-	-	-	1
056-006830	BUSHING QD-SK 1-1/4		1	1	1	1	1	1
056-005373	SHEAVE MOTOR 2B3.4		1	1	1	1	1	-
056-006833	SHEAVE MOTOR 3B3.4		-	-	-	-	-	1
056-005375	BUSHING QD-SH 7/8		1	1	-	-	-	-
056-005376	BUSHING QD-SH 1-1/8		-	-	1	1	1	-
056-006344	BUSHING QD-SH 1-3/8		-	-	-	-	-	1
044-001510	AUGER BEARING W/FLANGE 1 1/4"		2	2	2	2	2	2
004-002673	MOTOR 2HP 1750RPM 240/480V-3P 145T	7/8	1	1	-	-	-	-
004-002671	MOTOR 3HP 1750RPM 240/480V-3P 182T	1-1/8	-	-	1	*	-	-
004-002672	MOTOR 5HP 1750RPM 240/480V-3P 184T	1-1/8	-	-	-	*	1	-
004-002675	MOTOR 10HP 1750RPM 240/480V-3P 215T	1-3/8	-	-	-	-	-	1
(*) NOTE: DPX4T USE A 3HP MOTOR ------ DPX8T USE A 5HP MOTOR								
100-002486	KEY-MOTOR 1/4" X 1/4" X 1"		1	1	1	1	1	1
100-007397	MOTOR ADAPTER PLATE		1	1	-	-	-	-
100-007396	MOTOR PLATE TOP 1-5HP		1	1	1	1	1	-
100-002855	MOTOR PLATE BOT 1-5HP		1	1	1	1	1	-
100-006740	MOTOR PLATE TOP 10HP		-	-	-	-	-	1
100-006741	MOTOR PLATE BOT 10HP		-	-	-	-	-	1
040-002739	TCS 5/16-18UNC X 3/4		22	22	22	22	22	22
040-005321	BOLT WHIZ 5/16-18UNC X 3/4		156	156	196	240	310	384
040-001459	NUT WHIZ 5/16-18UNC		156	156	196	240	310	384
040-001483	BOLT WHIZ 3/8 -16UNC X 1		22	22	24	28	32	36
040-001440	BOLT WHIZ 3/8 -16UNC X 1 1/4		4	4	4	4	4	4
040-001460	NUT WHIZ 3/8 -16UNC		26	26	30	32	36	40

S-G-DPX4-8T-380V

MODEL:_____LENGTH____FT

SERIAL NO:____-____-___-_____-_____

SHIPPING LIST - GARNER ASSEMBLY - DPX4T/DPX8T

PARTS LISTED ARE FOR AUGERS W/ 1 1/4" SHAFTS

3P – DENOTES 380V-3P DRYERS

W/ 8" OR W/O 8" INDICATES WITH OR WITHOUT 8" DIA FILLING HOLE

PART NUMBER	PART DESCRIPTION	(FT)	10	15	20	25	30	40
400-009211	TOP ASS'Y 10FT W/TWO DOOR W/ 8"		1	-	-	-	-	-
400-009205	TOP ASS'Y 10FT W/ONE DOOR W/O 8"		-	1	1	1	1	1
200-002976	TOP ASS'Y INTERMEDIATE		-	-	-	1	1	2
400-009220	TOP ASS'Y 5FT REAR ONE DOOR W/ 8"		-	1	-	1	-	-
400-009221	TOP ASS'Y 10FT REAR ONE DOOR W/ 8"		-	-	1	-	1	1
400-006579	GARNER SIDE ASS'Y 5FT - 34"		-	2	-	2	-	-
400-006578	GARNER SIDE ASS'Y 10FT - 34"		2	2	4	4	6	8
100-002599	CROSS STRAP		3	3	6	6	9	12
100-007363	TOP GARNER SIDE STIFFENING BRACKET 34″		2	2	4	4	6	8
100-006580	END PLATE FRONT W/SWITCH - 34"		1	1	1	1	1	-
100-006823	END PLATE REAR STANDARD - 34"		1	1	1	1	1	-
100-006772	END PLATE FRONT W/SWITCH 40FT		-	-	-	-	-	1
100-006773	END PLATE REAR W/SWITCH 40FT		-	-	-	-	-	1
400-009196	ASS'Y LOW GRAIN SWITCH (FILL END)		1	1	1	1	1	1
400-009197	ASS'Y LOW GRAIN SWITCH (MOTOR END)		-	-	-	-	-	1
100-006824	AUGER HEAD PLATE FRONT 8″		1	1	1	1	1	-
100-006825	AUGER HEAD PLATE REAR 8″		1	1	1	1	1	-
100-006770	AUGER HEAD PLATE FRONT 10″		-	-	-	-	-	1
100-006771	AUGER HEAD PLATE REAR 10″		-	-	-	-	-	1
200-006834	AUGER ONLY 10FT ONLY - 8"		1	-	-	-	-	-
200-006723	AUGER ONLY FRONT 1OFT - 8"		-	1	1	1	1	-
200-006724	AUGER ONLY INTER 10FT - 8"		-	-	-	1	1	-
200-006721	AUGER ONLY REAR 5FT - 8"		-	1	-	1	-	-
200-006720	AUGER ONLY REAR 10FT - 8"		-	-	1	-	1	-
200-006794	AUGER ONLY FRONT 1OFT - 10"		-	-	-	-	-	1
200-006793	AUGER ONLY INTER 10FT - 10"		-	-	-	-	-	2
200-006792	AUGER ONLY REAR 10FT - 10"		-	-	-	-	-	1
100-006727	AUGER SHAFT 1 1/4" FT-KEYED		1	1	1	1	1	1
100-006726	AUGER SHAFT 1 1/4" INTER		-	1	1	2	2	3
100-006728	AUGER SHAFT 1 1/4" RE-NON-KEYED		1	1	1	1	1	1
040-005324	BOLT-HEX 7/16-14UNC X 3"		4	6	8	12	12	16
040-006732	NUT -LOCK 7/16-14UNC		4	6	8	12	12	16
400-006827	AUGER SUPPORT HANGER ASS'Y - 8"		-	1	1	2	2	-
400-006829	AUGER SUPPORT HANGER ASS'Y - 10"		-	-	-	-	-	3

MODEL:_____LENGTH_____FT

SERIAL NO:____-____-___-_____-_____

SHIPPING LIST - GARNER ASSEMBLY - DPX4T/DPX8T

PARTS LISTED ARE FOR AUGERS W/ 1 1/4" SHAFTS

3P – DENOTES 380V-3P DRYERS

W/ 8" OR W/O 8" INDICATES WITH OR WITHOUT 8" DIA FILLING HOLE

PART NUMBER	PART DESCRIPTION	(FT)	10	15	20	25	30	40
200-006992	AUGER TROUGH INTER 10FT - 8		-	-	-	1	1	-
200-007002	AUGER TROUGH REAR 5FT - 8		1	1	-	1	-	-
200-006993	AUGER TROUGH REAR 10FT - 8		-	-	1	-	1	-
200-006999	AUGER TROUGH INTER 10FT - 10"		-	-	-	-	-	2
200-007000	AUGER TROUGH REAR 10FT - 10"		-	-	-	-	-	1
200-005388	BELT GUARD - 8″		1	1	1	1	1	-
100-003343	BELT GUARD BACK PLATE - 8″		1	1	1	1	1	-
200-006817	BELT GUARD - 10″		-	-	-	-	-	1
100-006818	BELT GUARD BACK PLATE - 10″		-	-	-	-	-	1
049-007874	BELT "B76" 77.8PITCH		2	2	2	2	2	3
056-007872	SHEAVE AUGER 2B15.4		1	1	1	1	1	-
056-007873	SHEAVE AUGER 3B15.4		-	-	-	-	-	1
056-006830	BUSHING QD-SK 1-1/4		1	1	1	1	1	1
056-005373	SHEAVE MOTOR 2B3.4		1	1	1	1	1	-
056-006833	SHEAVE MOTOR 3B3.4		-	-	-	-	-	1
056-005375	BUSHING QD-SH 7/8		1	1	-	-	-	-
056-005376	BUSHING QD-SH 1-1/8		-	-	1	1	1	-
056-006344	BUSHING QD-SH 1/3/8		-	-	-	-	-	1
044-001510	AUGER BEARING W/FLANGE 1 1/4"		2	2	2	2	2	2
004-007854	MOTOR 2HP 1450RPM 380V-3P 145T 7/8		1	1	-	-	-	-
004-007855	MOTOR 3HP 1450RPM 380V-3P 182T 1-1/8		-	-	1	*	-	-
004-007629	MOTOR 5HP 1450RPM 380V-3P 184T 1-1/8		-	-	-	*	1	-
004-007857	MOTOR 10HP 1450RPM 380V-3P 215T 1-3/8		-	-	-	-	-	1
(*) NOTE:	DPX4T USE A 3HP MOTOR ------ DPX8T USE A 5HP MOTOR							
100-002486	KEY-MOTOR 1/4" X 1/4" X 1"		1	1	1	1	1	1
100-007397	MOTOR ADAPTER PLATE		1	1	-	-	-	-
100-007396	MOTOR PLATE TOP 1-5HP		1	1	1	1	1	-
100-002855	MOTOR PLATE BOT 1-5HP		1	1	1	1	1	-
100-006740	MOTOR PLATE TOP 10HP		-	-	-	-	-	1
100-006741	MOTOR PLATE BOT 10HP		-	-	-	-	-	1
040-002739	TCS 5/16-18UNC X 3/4		22	22	22	22	22	22
040-005321	BOLT WHIZ 5/16-18UNC X 3/4		156	156	196	240	310	384
040-001459	NUT WHIZ 5/16-18UNC		156	156	196	240	310	384
040-001483	BOLT WHIZ 3/8 -16UNC X 1		22	22	24	28	32	36
040-001440	BOLT WHIZ 3/8 -16UNC X 1 1/4		4	4	4	4	4	4
040-001460	NUT WHIZ 3/8 -16UNC		26	26	30	32	36	40

S-G-DPX4-8T-575V

MODEL:_____LENGTH____FT

SERIAL NO:____-____-___-_____-_____

SHIPPING LIST - GARNER ASSEMBLY - DPX4T/DPX8T

PARTS LISTED ARE FOR AUGERS W/ 1 1/4" SHAFTS

3P – DENOTES 575V-3P DRYERS

W/ 8" OR W/O 8" INDICATES WITH OR WITHOUT 8" DIA FILLING HOLE

PART NUMBER	PART DESCRIPTION (FT)	10	15	20	25	30	40
400-009211	TOP ASS'Y 10FT W/TWO DOOR W/ 8"	1	-	-	-	-	-
400-009205	TOP ASS'Y 10FT W/ONE DOOR W/O 8"	-	1	1	1	1	1
200-002976	TOP ASS'Y INTERMEDIATE	-	-	-	1	1	2
400-009220	TOP ASS'Y 5FT REAR ONE DOOR W/ 8"	-	1	-	1	-	-
400-009221	TOP ASS'Y 10FT REAR ONE DOOR W/ 8"	-	-	1	-	1	1
400-006579	GARNER SIDE ASS'Y 5FT - 34"	-	2	-	2	-	-
400-006578	GARNER SIDE ASS'Y 10FT - 34"	2	2	4	4	6	8
100-002599	CROSS STRAP	3	3	6	6	9	12
100-007363	TOP GARNER SIDE STIFFENING BRACKET 34″	2	2	4	4	6	8
100-006580	END PLATE FRONT W/SWITCH - 34"	1	1	1	1	1	-
100-006823	END PLATE REAR STANDARD - 34"	1	1	1	1	1	-
100-006772	END PLATE FRONT W/SWITCH 40FT	-	-	-	-	-	1
100-006773	END PLATE REAR W/SWITCH 40FT	-	-	-	-	-	1
400-009196	ASS'Y LOW GRAIN SWITCH (MOTOR END)	1	1	1	1	1	1
400-009197	ASS'Y LOW GRAIN SWITCH (FILL END)	-	-	-	-	-	1
100-006824	AUGER HEAD PLATE FRONT - 8″	1	1	1	1	1	-
100-006825	AUGER HEAD PLATE REAR - 8″	1	1	1	1	1	-
100-006770	AUGER HEAD PLATE FRONT - 10″	-	-	-	-	-	1
100-006771	AUGER HEAD PLATE REAR - 10″	-	-	-	-	-	1
200-006834	AUGER ONLY 10FT ONLY - 8"	1	-	-	-	-	-
200-006723	AUGER ONLY FRONT 1OFT - 8"	-	1	1	1	1	-
200-006724	AUGER ONLY INTER 10FT - 8"	-	-	-	1	1	-
200-006721	AUGER ONLY REAR 5FT - 8"	-	1	-	1	-	-
200-006720	AUGER ONLY REAR 10FT - 8"	-	-	1	-	1	-
200-006794	AUGER ONLY FRONT 1OFT - 10"	-	-	-	-	-	1
200-006793	AUGER ONLY INTER 10FT - 10"	-	-	-	-	-	2
200-006792	AUGER ONLY REAR 10FT - 10"	-	-	-	-	-	1
100-006727	AUGER SHAFT 1 1/4" FT-KEYED	1	1	1	1	1	1
100-006726	AUGER SHAFT 1 1/4" INTER	-	1	1	2	2	3
100-006728	AUGER SHAFT 1 1/4" RE-NON-KEYED	1	1	1	1	1	1
040-005324	BOLT-HEX 7/16-14UNC X 3"	4	6	8	12	12	16
040-006732	NUT -LOCK 7/16-14UNC	4	6	8	12	12	16
400-006827	AUGER SUPPORT HANGER ASS'Y - 8"	-	1	1	2	2	-
400-006829	AUGER SUPPORT HANGER ASS'Y - 10"	-	-	-	-	-	3

MODEL:_____LENGTH_____FT

SERIAL NO:_____-_____-___-_____-_____

SHIPPING LIST - GARNER ASSEMBLY - DPX4T/DPX8T

PARTS LISTED ARE FOR AUGERS W/ 1 1/4" SHAFTS

3P – DENOTES 575V-3P DRYERS

W/ 8" OR W/O 8" INDICATES WITH OR WITHOUT 8" DIA FILLING HOLE

PART NUMBER	PART DESCRIPTION	(FT)	10	15	20	25	30	40
200-006992	AUGER TROUGH INTER 10FT - 8		-	-	-	1	1	-
200-007002	AUGER TROUGH REAR 5FT - 8		1	1	-	1	-	-
200-006993	AUGER TROUGH REAR 10FT - 8		-	-	1	-	1	-
200-006999	AUGER TROUGH INTER 10FT - 10"		-	-	-	-	-	2
200-007000	AUGER TROUGH REAR 10FT - 10"		-	-	-	-	-	1
200-005388	BELT GUARD - 8″		1	1	1	1	1	-
100-003343	BELT GUARD BACK PLATE - 8″		1	1	1	1	1	-
200-006817	BELT GUARD - 10″		-	-	-	-	-	1
100-006818	BELT GUARD BACK PLATE - 10″		-	-	-	-	-	1
049-003364	BELT "B82" 83.3PITCH		2	2	2	2	2	3
056-005372	SHEAVE AUGER 2B18.4		1	1	1	1	1	-
056-006832	SHEAVE AUGER 3B18.4		-	-	-	-	-	1
056-006830	BUSHING QD-SK 1-1/4		1	1	1	1	1	1
056-005373	SHEAVE MOTOR 2B3.4		1	1	1	1	1	-
056-006833	SHEAVE MOTOR 3B3.4		-	-	-	-	-	1
056-005375	BUSHING QD-SH 7/8		1	1	-	-	-	-
056-005376	BUSHING QD-SH 1-1/8		-	-	1	1	1	-
056-006344	BUSHING QD-SH 1-3/8		-	-	-	-	-	1
044-001510	AUGER BEARING W/FLANGE 1 1/4"		2	2	2	2	2	2
004-007425	MOTOR 2HP 1750RPM 575V-3P 145T 7/8		1	1	-	-	-	-
004-007615	MOTOR 3HP 1750RPM 575V-3P 182T 1-1/8		-	-	1	*	-	-
004-007629	MOTOR 5HP 1750RPM 575V-3P 184T 1-1/8		-	-	-	*	1	-
004-007570	MOTOR 10HP 1750RPM 575V-3P 213T 1-3/8		-	-	-	-	-	1
(*) NOTE: DPX4T USE A 3HP MOTOR ------ DPX8T USE A 5HP MOTOR								
100-002486	KEY-MOTOR 1/4" X 1/4" X 1"		1	1	1	1	1	1
100-007397	MOTOR ADAPTER PLATE		1	1	-	-	-	-
100-007396	MOTOR PLATE TOP 1-5HP		1	1	1	1	1	-
100-002855	MOTOR PLATE BOT 1-5HP		1	1	1	1	1	-
100-006740	MOTOR PLATE TOP 10HP		-	-	-	-	-	1
100-006741	MOTOR PLATE BOT 10HP		-	-	-	-	-	1
040-002739	TCS 5/16-18UNC X 3/4		22	22	22	22	22	22
040-005321	BOLT WHIZ 5/16-18UNC X 3/4		156	156	196	240	310	384
040-001459	NUT WHIZ 5/16-18UNC		156	156	196	240	310	384
040-001483	BOLT WHIZ 3/8 -16UNC X 1		22	22	24	28	32	36
040-001440	BOLT WHIZ 3/8 -16UNC X 1 1/4		4	4	4	4	4	4
040-001460	NUT WHIZ 3/8 -16UNC		26	26	30	32	36	40

MODEL:_____LENGTH_____FT

SERIAL NO:_____-_____-_____-_____-_____

SHIPPING LIST - GARNER ASSEMBLY – DPX12T & DPX16GT

PARTS LISTED ARE FOR AUGERS W/ 1 1/4" SHAFTS

3P – DENOTES 240V/480V-3P DRYERS

W/ 8" OR W/O 8" INDICATES WITH OR WITHOUT 8" DIA FILLING HOLE

PART NUMBER	PART DESCRIPTION (FT)	10	15	20	25	30	40
400-009211	TOP ASS'Y 10FT W/TWO DOOR W/ 8"	1	-	-	-	-	-
400-009205	TOP ASS'Y 10FT W/ONE DOOR W/O 8"	-	1	1	1	1	1
200-002976	TOP ASS'Y INTERMEDIATE	-	-	-	1	1	2
400-009220	TOP ASS'Y 5FT REAR ONE DOOR W/ 8"	-	1	-	1	-	-
400-009221	TOP ASS'Y 10FT REAR ONE DOOR W/ 8"	-	-	1	-	1	1
400-006579	GARNER SIDE ASS'Y 5FT - 34"	-	2	-	2	-	-
400-006578	GARNER SIDE ASS'Y 10FT – 34″	2	2	4	4	6	8
100-002599	CROSS STRAP	3	3	6	6	9	12
100-007363	TOP GARNER SIDE STIFFENING BRACKET 34″	3	3	6	6	9	12
100-006772	END PLATE FRONT W/SWITCH - 34″,10″	1	1	1	1	1	1
100-007383	END PLATE REAR W/O SWITCH - 34″,10	1	1	1	1	1	-
100-006773	END PLATE REAR W/SWITCH - 34″,10″	-	-	-	-	-	1
400-009196	ASS'Y LOW GRAIN SWITCH (MOTOR END)	1	1	1	1	1	1
400-009197	ASS'Y LOW GRAIN SWITCH (FILL END)	-	-	-	-	-	1
100-006770	AUGER HEAD PLATE FRONT 10″	1	1	1	1	1	1
100-006771	AUGER HEAD PLATE REAR 10″	1	1	1	1	1	1
200-007381	AUGER ONLY 10FT ONLY - 10"	1	-	-	-	-	-
200-006794	AUGER ONLY FRONT 1OFT - 10"	-	1	1	1	1	1
200-006793	AUGER ONLY INTER 10FT - 10"	-	-	-	1	1	2
200-007382	AUGER ONLY REAR 5FT - 10"	-	1	-	1	-	-
200-006792	AUGER ONLY REAR 10FT - 10"	-	-	1	-	1	1
100-006727	AUGER SHAFT 1 1/4" FT-KEYED	1	1	1	1	1	1
100-006726	AUGER SHAFT 1 1/4" INTER	-	1	1	2	2	3
100-006728	AUGER SHAFT 1 1/4" RE-NON-KEYED	1	1	1	1	1	1
040-005324	BOLT-HEX 7/16-14UNC X 3"	4	6	8	12	12	16
040-006732	NUT -LOCK 7/16-14UNC	4	6	8	12	12	16
400-006829	AUGER SUPPORT HANGER ASS'Y - 10"	-	1	1	2	2	3
200-006999	AUGER TROUGH INTER 10FT - 10"	-	-	-	1	1	2
200-007379	AUGER TROUGH REAR 5FT – 10″	1	1	-	1	-	-
200-007000	AUGER TROUGH REAR 10FT - 10"	-	-	1	-	1	1

MODEL:_____LENGTH_____FT

SERIAL NO:_____-_____-_____-_____-_____

SHIPPING LIST - GARNER ASSEMBLY – DPX12T & DPX16GT

PARTS LISTED ARE FOR AUGERS W/ 1 1/4" SHAFTS

3P – DENOTES 240V/480V-3P DRYERS

W/ 8" OR W/O 8" INDICATES WITH OR WITHOUT 8" DIA FILLING HOLE

PART NUMBER	PART DESCRIPTION (FT)	10	15	20	25	30	40
200-006817	BELT GUARD 10″ AUGER	1	1	1	1	1	1
100-006818	BELT GUARD BACK PLATE 10″ AUGER	1	1	1	1	1	1
049-003364	BELT "B82" 83.3PITCH	2	2	2	2	2	3
056-005372	SHEAVE AUGER 2B18.4	1	1	1	1	1	-
056-006832	SHEAVE AUGER 3B18.4	-	-	-	-	-	1
056-006830	BUSHING QD-SK 1-1/4	1	1	1	1	1	1
056-005373	SHEAVE MOTOR 2B3.4	1	1	1	1	1	-
056-006833	SHEAVE MOTOR 3B3.4	-	-	-	-	-	1
056-005375	BUSHING QD-SH 7/8	1	1	-	-	-	-
056-005376	BUSHING QD-SH 1-1/8	-	-	1	1	1	-
056-006344	BUSHING QD-SH 1-3/8	-	-	-	-	-	1
044-001510	AUGER BEARING W/FLANGE 1 1/4"	2	2	2	2	2	2
004-002673	MOTOR 2HP 1750RPM 240/480V-3P 145T 7/8	1	1	-	-	-	-
004-002671	MOTOR 3HP 1750RPM 240/480V-3P 182T 1-1/8	-	-	1	-	-	-
004-002672	MOTOR 5HP 1750RPM 240/480V-3P 184T 1-1/8	-	-	-	1	1	-
004-002675	MOTOR 10HP 1750RPM 240/480V-3P 215T 1-3/8	-	-	-	-	-	1
100-002486	KEY-MOTOR 1/4" X 1/4" X 1"	1	1	1	1	1	1
100-007397	MOTOR ADAPTER PLATE	1	1	-	-	-	-
100-007396	MOTOR PLATE TOP 1-5HP	1	1	1	1	1	-
100-002855	MOTOR PLATE BOT 1-5HP	1	1	1	1	1	-
100-006740	MOTOR PLATE TOP 10HP	-	-	-	-	-	1
100-006741	MOTOR PLATE BOT 10HP	-	-	-	-	-	1
040-002739	TCS 5/16-18UNC X 3/4	22	22	22	22	22	22
040-005321	BOLT WHIZ 5/16-18UNC X 3/4	156	156	196	240	310	384
040-001459	NUT WHIZ 5/16-18UNC	156	156	196	240	310	384
040-001483	BOLT WHIZ 3/8 -16UNC X 1	22	22	24	28	32	36
040-001440	BOLT WHIZ 3/8 -16UNC X 1 1/4	4	4	4	4	4	4
040-001460	NUT WHIZ 3/8 -16UNC	26	26	28	32	36	40

MODEL:_____LENGTH_____FT

SERIAL NO:____-____-____-_____-_____

SHIPPING LIST - GARNER ASSEMBLY – DPX12T & DPX16GT

PARTS LISTED ARE FOR AUGERS W/ 1 1/4" SHAFTS

3P – DENOTES 380V-3P DRYERS

W/ 8" OR W/O 8" INDICATES WITH OR WITHOUT 8" DIA FILLING HOLE

PART NUMBER	PART DESCRIPTION (FT)	10	15	20	25	30	40
400-009211	TOP ASS'Y 10FT W/TWO DOOR W/ 8"	1	-	-	-	-	-
400-009205	TOP ASS'Y 10FT W/ONE DOOR W/O 8"	-	1	1	1	1	1
200-002976	TOP ASS'Y INTERMEDIATE	-	-	-	1	1	2
400-009220	TOP ASS'Y 5FT REAR ONE DOOR W/ 8"	-	1	-	1	-	-
400-009221	TOP ASS'Y 10FT REAR ONE DOOR W/ 8"	-	-	1	-	1	1
400-006579	GARNER SIDE ASS'Y 5FT - 34"	-	2	-	2	-	-
400-006578	GARNER SIDE ASS'Y 10FT – 34″	2	2	4	4	6	8
100-002599	CROSS STRAP	3	3	6	6	9	12
100-007363	TOP GARNER SIDE STIFFENING BRACKET 34″	3	3	6	6	9	12
100-006772	END PLATE FRONT W/SWITCH - 34″,10″	1	1	1	1	1	1
100-007383	END PLATE REAR W/O SWITCH - 34″,10″	1	1	1	1	1	-
100-006773	END PLATE REAR W/SWITCH - 34″,10″	-	-	-	-	-	1
400-009196	ASS'Y LOW GRAIN SWITCH (MOTOR END)	1	1	1	1	1	1
400-009197	ASS'Y LOW GRAIN SWITCH (FILL END)	-	-	-	-	-	1
100-006770	AUGER HEAD PLATE FRONT 10″	1	1	1	1	1	1
100-006771	AUGER HEAD PLATE REAR 10″	1	1	1	1	1	1
200-007381	AUGER ONLY 10FT ONLY - 10"	1	-	-	-	-	-
200-006794	AUGER ONLY FRONT 1OFT - 10"	-	1	1	1	1	1
200-006793	AUGER ONLY INTER 10FT - 10"	-	-	-	1	1	2
200-007382	AUGER ONLY REAR 5FT - 10"	-	1	-	1	-	-
200-006792	AUGER ONLY REAR 10FT - 10"	-	-	1	-	1	1
100-006727	AUGER SHAFT 1 1/4" FT-KEYED	1	1	1	1	1	1
100-006726	AUGER SHAFT 1 1/4" INTER	-	1	1	2	2	3
100-006728	AUGER SHAFT 1 1/4" RE-NON-KEYED	1	1	1	1	1	1
040-005324	BOLT-HEX 7/16-14UNC X 3"	4	6	8	12	12	16
040-006732	NUT -LOCK 7/16-14UNC	4	6	8	12	12	16
400-006829	AUGER SUPPORT HANGER ASS'Y - 10"	-	1	1	2	2	3
200-006999	AUGER TROUGH INTER 10FT - 10"	-	-	-	1	1	2
200-007379	AUGER TROUGH REAR 5FT – 10″	1	1	-	1	-	-
200-007000	AUGER TROUGH REAR 10FT - 10"	-	-	1	-	1	1

MODEL:_____LENGTH_____FT

SERIAL NO:____-____-____-_____-_____

SHIPPING LIST - GARNER ASSEMBLY – DPX12T & DPX16GT

PARTS LISTED ARE FOR AUGERS W/ 1 1/4" SHAFTS

3P – DENOTES 380V-3P DRYERS

W/ 8" OR W/O 8" INDICATES WITH OR WITHOUT 8" DIA FILLING HOLE

PART NUMBER	PART DESCRIPTION	(FT)	10	15	20	25	30	40
200-006817	BELT GUARD	10″ AUGER	1	1	1	1	1	1
100-006818	BELT GUARD BACK PLATE	10″ AUGER	1	1	1	1	1	1
049-007874	BELT "B76" 83.3PITCH		2	2	2	2	2	3
056-007872	SHEAVE AUGER 2B15.4		1	1	1	1	1	-
056-007873	SHEAVE AUGER 3B15.4		-	-	-	-	-	1
056-006830	BUSHING QD-SK 1-1/4		1	1	1	1	1	1
056-005373	SHEAVE MOTOR 2B3.4		1	1	1	1	1	-
056-006833	SHEAVE MOTOR 3B3.4		-	-	-	-	-	1
056-005375	BUSHING QD-SH 7/8		1	1	-	-	-	-
056-005376	BUSHING QD-SH 1-1/8		-	-	1	1	1	-
056-006344	BUSHING QD-SH 1-3/8		-	-	-	-	-	1
044-001510	AUGER BEARING W/FLANGE 1 1/4"		2	2	2	2	2	2
004-007854	MOTOR 2HP 1450RPM 380V-3P 145T 7/8		1	1	-	-	-	-
004-007855	MOTOR 3HP 1450RPM 380V-3P 182T 1-1/8		-	-	1	-	-	-
004-007856	MOTOR 5HP 1450RPM 380V-3P 184T 1-1/8		-	-	-	1	1	-
004-007857	MOTOR 10HP 1450RPM 380V-3P 215T 1-3/8		-	-	-	-	-	1
100-002486	KEY-MOTOR 1/4" X 1/4" X 1"		1	1	1	1	1	1
100-007397	MOTOR ADAPTER PLATE		1	1	-	-	-	-
100-007396	MOTOR PLATE TOP 1-5HP		1	1	1	1	1	-
100-002855	MOTOR PLATE BOT 1-5HP		1	1	1	1	1	-
100-006740	MOTOR PLATE TOP 10HP		-	-	-	-	-	1
100-006741	MOTOR PLATE BOT 10HP		-	-	-	-	-	1
040-002739	TCS 5/16-18UNC X 3/4		22	22	22	22	22	22
040-005321	BOLT WHIZ 5/16-18UNC X 3/4		156	156	196	240	310	384
040-001459	NUT WHIZ 5/16-18UNC		156	156	196	240	310	384
040-001483	BOLT WHIZ 3/8 -16UNC X 1		22	22	24	28	32	36
040-001440	BOLT WHIZ 3/8 -16UNC X 1 1/4		4	4	4	4	4	4
040-001460	NUT WHIZ 3/8 -16UNC		26	26	28	32	36	40

MODEL:_____LENGTH_____FT

SERIAL NO:____-____-____-_____-_____

SHIPPING LIST - GARNER ASSEMBLY – DPX12T & DPX16GT

PARTS LISTED ARE FOR AUGERS W/ 1 1/4" SHAFTS

3P – DENOTES 575V-3P DRYERS

W/ 8" OR W/O 8" INDICATES WITH OR WITHOUT 8" DIA FILLING HOLE

PART NUMBER	PART DESCRIPTION (FT)	10	15	20	25	30	40
400-009211	TOP ASS'Y 10FT W/TWO DOOR W/ 8"	1	-	-	-	-	-
400-009205	TOP ASS'Y 10FT W/ONE DOOR W/O 8"	-	1	1	1	1	1
200-002976	TOP ASS'Y INTERMEDIATE	-	-	-	1	1	2
400-009220	TOP ASS'Y 5FT REAR ONE DOOR W/ 8"	-	1	-	1	-	-
400-009221	TOP ASS'Y 10FT REAR ONE DOOR W/ 8"	-	-	1	-	1	1
400-006579	GARNER SIDE ASS'Y 5FT - 34"	-	2	-	2	-	-
400-006578	GARNER SIDE ASS'Y 10FT – 34″	2	2	4	4	6	8
100-002599	CROSS STRAP	3	3	6	6	9	12
100-007363	TOP GARNER SIDE STIFFENING BRACKET 34″	2	2	4	4	6	8
100-006772	END PLATE FRONT W/SWITCH - 34″,10″	1	1	1	1	1	1
100-007383	END PLATE REAR W/O SWITCH - 34″,10″	1	1	1	1	1	-
100-006773	END PLATE REAR W/SWITCH - 34″,10″	-	-	-	-	-	1
400-009196	ASS'Y LOW GRAIN SWITCH (MOTOR END)	1	1	1	1	1	1
400-009197	ASS'Y LOW GRAIN SWITCH (FILL END)	-	-	-	-	-	1
100-006770	AUGER HEAD PLATE FRONT 10″	1	1	1	1	1	1
100-006771	AUGER HEAD PLATE REAR 10″	1	1	1	1	1	1
200-007381	AUGER ONLY 10FT ONLY - 10"	1	-	-	-	-	-
200-006794	AUGER ONLY FRONT 1OFT - 10"	-	1	1	1	1	1
200-006793	AUGER ONLY INTER 10FT - 10"	-	-	-	1	1	2
200-007382	AUGER ONLY REAR 5FT - 10"	-	1	-	1	-	-
200-006792	AUGER ONLY REAR 10FT - 10"	-	-	1	-	1	1
100-006727	AUGER SHAFT 1 1/4" FT-KEYED	1	1	1	1	1	1
100-006726	AUGER SHAFT 1 1/4" INTER	-	1	1	2	2	3
100-006728	AUGER SHAFT 1 1/4" RE-NON-KEYED	1	1	1	1	1	1
040-005324	BOLT-HEX 7/16-14UNC X 3"	4	6	8	12	12	16
040-006732	NUT -LOCK 7/16-14UNC	4	6	8	12	12	16
400-006829	AUGER SUPPORT HANGER ASS'Y - 10"	-	1	1	2	2	3
200-006999	AUGER TROUGH INTER 10FT - 10"	-	-	-	1	1	2
200-007379	AUGER TROUGH REAR 5FT – 10″	1	1	-	1	-	-
200-007000	AUGER TROUGH REAR 10FT - 10"	-	-	1	-	1	1

MODEL:_____LENGTH_____FT

SERIAL NO:____-____-____-_____-_____

SHIPPING LIST - GARNER ASSEMBLY – DPX12T & DPX16GT

PARTS LISTED ARE FOR AUGERS W/ 1 1/4" SHAFTS

3P – DENOTES 575V-3P DRYERS

W/ 8" OR W/O 8" INDICATES WITH OR WITHOUT 8" DIA FILLING HOLE

PART NUMBER	PART DESCRIPTION	(FT)	10	15	20	25	30	40
200-006817	BELT GUARD 10″ AUGER		1	1	1	1	1	1
100-006818	BELT GUARD BACK PLATE 10″ AUGER		1	1	1	1	1	1
049-003364	BELT "B82" 83.3PITCH		2	2	2	2	2	3
056-005372	SHEAVE AUGER 2B18.4		1	1	1	1	1	-
056-006832	SHEAVE AUGER 3B18.4		-	-	-	-	-	1
056-006830	BUSHING QD-SK 1-1/4		1	1	1	1	1	1
056-005373	SHEAVE MOTOR 2B3.4		1	1	1	1	1	-
056-006833	SHEAVE MOTOR 3B3.4		-	-	-	-	-	1
056-005375	BUSHING QD-SH 7/8		1	1	-	-	-	-
056-005376	BUSHING QD-SH 1-1/8		-	-	1	1	1	-
056-006344	BUSHING QD-SH 1-3/8		-	-	-	-	-	1
044-001510	AUGER BEARING W/FLANGE 1 1/4"		2	2	2	2	2	2
004-007425	MOTOR 2HP 1750RPM 575V-3P	145T 7/8	1	1	-	-	-	-
004-007615	MOTOR 3HP 1750RPM 575V-3P	182T 1-1/8	-	-	1	-	-	-
004-007629	MOTOR 5HP 1750RPM 575V-3P	184T 1-1/8	-	-	-	1	1	-
004-007570	MOTOR 10HP 1750RPM 575V-3P	213T 1-3/8	-	-	-	-	-	1
100-002486	KEY-MOTOR 1/4" X 1/4" X 1"		1	1	1	1	1	1
100-007397	MOTOR ADAPTER PLATE		1	1	-	-	-	-
100-007396	MOTOR PLATE TOP 1-5HP		1	1	1	1	1	-
100-002855	MOTOR PLATE BOT 1-5HP		1	1	1	1	1	-
100-006740	MOTOR PLATE TOP 10HP		-	-	-	-	-	1
100-006741	MOTOR PLATE BOT 10HP		-	-	-	-	-	1
040-002739	TCS 5/16-18UNC X 3/4		22	22	22	22	22	22
040-005321	BOLT WHIZ 5/16-18UNC X 3/4		156	156	196	240	310	384
040-001459	NUT WHIZ 5/16-18UNC		156	156	196	240	310	384
040-001483	BOLT WHIZ 3/8 -16UNC X 1		22	22	24	28	32	36
040-001440	BOLT WHIZ 3/8 -16UNC X 1 1/4		4	4	4	4	4	4
040-001460	NUT WHIZ 3/8 -16UNC		26	26	28	32	36	40

DELUX
Continuous Flow GRAIN DRYERS

COMPONENT LITERATURE

- DP & DPSL SERIES
- DPX & DPXSL SERIES
- DPX4T SERIES
- DPX8T SERIES
- DPX12T SERIES
- DPX16GT SERIES

MC-5000
OCTOBER 14, 2009



FIREYE MODULAR MicroM

FLAME SAFEGUARD CONTROLS

c UL US LISTED FM APPROVED

WARNING: Selection of this control for a particular application should be made by a competent professional, licensed by a state or other government agency. Inappropriate application of this product could result in an unsafe condition hazardous to life and property.

DESCRIPTION

The Fireye MicroM Series Flame Safeguard Control is a compact, microprocessor based, modular burner management system designed to provide automatic ignition and continuous flame monitoring for commercial sizes of heating and process equipment firing any type of fuel.

The MicroM is designed to be backward compatible with existing TFM, UVM and M-Series II controls. The MicroM MEC120 and MEC230 chassis with the appropriate MEP100, MEP200 and MEP500 series programmers provide operation similar to its predecessors and is usually directly interchangeable. The MEC320 and MEC480 chassis with the appropriate MEP300, MEP400 and MEP600 series programmers provide additional enhancements such as early spark termination, pilot proving, and interrupted pilot.

The advantages of the MicroM are zero dependence on discrete components previously used for timing functions. The MicroM, through the use of micro-controller technology, incorporates smart diagnostic LED's, smart reset function for multi-burner applications, optional alpha-numeric display output (ED510), and serial communications via a Modbus or E500 Communication Interface. The MicroM system also provides additional amplifier selections. Along with the standard UV and Flame Rod amplifiers are UV self-check, Infrared, Cadmium Sulfide and a dry contact amplifier for use with the Fireye Phoenix scanner. All amplifiers are available with flame failure response times of 0.8 seconds or 3 seconds nominal (4 second maximum) and each provide a set of test jacks with a uniform range of 0-10 VDC for the measurement of flame signal intensity.

A complete MicroM system includes the appropriate flame detector, plug-in amplifier and programmer modules which connect into a standard chassis and wiring base. Interchangeable programmer and amplifier modules allow for complete versatility in selection of control function, timing and flame scanning means. Functions such as relight, recycle, non-recycle, two stage capability, non-recycle air flow, proof of air flow open at start, purge timing, early spark termination, pilot proving and pilot cutoff are determined by the appropriate programmer module. Type of flame scanner (UV, Repetitive UV Self-Check, Flame Rod, IR or Cadmium Sulfide or dry contact) and the flame failure response time (FFRT) are determined by the amplifier module. Optional plug-in daughter boards provide additional features such as remote reset, alpha-numeric display and serial communications.

The MicroM programmers are micro-controller based modules that control the sequence of operation and also interface with plug-in amplifiers, meter boards, display drivers and external communication devices. The programmers are available in an assortment of configurations necessary to resolve the application requirement. Current families of programmers for use with the MEC120 and

MEC230 type chassis include the MEP100, MEP 200 and MEP500 series. Programmers for use with the MEC320 and MEC480 type chassis include the MEP300, MEP400 and MEP600 series.

Some programmer modules are equipped with a series of dipswitches to select Purge Timing, Pilot Trial for Ignition (PTFI) timing, Proof of Air flow open at start, Post Purge, Recycle and Non-Recycle operation. LED indicators on the programmer modules indicate the current operating status of the control and during a lockout condition displays the fault as a coded sequence, simplifying the troubleshooting of a shutdown.

In the event of pilot ignition failure, or following a safety shutdown, the control locks out, activating an alarm circuit and displays the cause of lockout on the integrated LED's and on the optional ED510 display. Unless otherwise specified, manual reset is required. Remote reset is available on the MEC120R, MEC120RC, MEC320RD, MEC230RC, MEC320R, MEC320RC and MEC320RD chassis. A detailed description of the various programmer, amplifier and chassis modules is found later in this document. A "run-check" switch, provided to assist in testing size, position and stabilization of the pilot, is provided on some specific models and all MEP500 and MEP600 series programmers.

Modular MicroM controls incorporate a safety checking circuit that is operative on each start. If flame (real or simulated) is detected prior to a start or during purge, the fuel valves will not be energized and the unit will lock out.

The modular MicroM controls use the same wiring base as the Fireye UVM, TFM and M- Series II controls and are designed to be interchangeable with most models with little or no rewiring. See INSTALLATION OF CONTROL, SCANNERS AND FLAME DETECTORS (page 8 and 47) for temperature and wiring requirements.

NOTE: The individual MicroM modules, i.e. MEC chassis, MEP programmers and amplifiers are not interchangeable with M-Series II modules, i.e. MC chassis, MP programmers and amplifiers.

SPECIFICATIONS

Supply: 120 VAC (min. 102, max. 132) 50/60 Hz. (MEC1XX, MEC3XX)
230 VAC (min. 196, max. 253) 50/60 Hz. (MEC2XX, MEC4XX)

Power Consumption: 12 VA (Operating)

Shipping Weight (Approx): 3 lbs (1.4 kg)

Operating Temperature: -40°F (-40°C) to 140°F (60°C)

Table 1: AMBIENT TEMPERATURE LIMITS

	MAXIMUM		MINIMUM	
Control	140°F	60°C	- 40°F	- 40°C
Scanner UV1A, UV2, UV8A, 45UV3, UV90	200°F	93°C	- 40°F	- 40°C
45UV5-1007, 45UV5-1009; 55UV5-1007, -1009	200°F	93°C	- 40°F	- 40°C
Photocell 45CM1 (OBSOLETE)	165°F	74°C	- 40°F	- 40°C
Flame Rod (Tip 2460 F)	1500°F	816°C	- 40°F	- 40°C
48PT2	140°F	60°C	-40°F	-40°C
CSIA5	140°F	60°C	-40°F	-40°C

Table 2: **LOAD RATINGS: All Ratings are 120V, 60 Hz**

Fireye Terminal	Typical Load	Maximum Rating @120V 60 Hz
3 or 4 Individual or combined	Pilot valve(s) Solenoid valve Ignition Transformer	125 VA pilot duty (solenoid valve) plus 250 VA (Transformer)
5	Main Fuel Valve(s)	125 VA pilot duty (solenoid) or 25 VA pilot duty (solenoid) and 400 VA (opening) motorized, 250 VA hold
8	Motor or contactor	Terminal 8 rated to energize and de-energize 9.8 FLA, 58.8 LRA on safety lockout.
A	Alarm	125 VA, pilot duty
Minimum load requirement = 100mA		

Table 3: **ALTERNATIVE LOAD RATINGS:**

COMBINATION NUMBER	PILOT FUEL TERMINAL 3	IGNITION TERMINAL 4	MAIN VALVE TERMINAL 5
1	C	NO LOAD	E
2	B	NO LOAD	E
3	NO LOAD	NO LOAD	E
4	E	A	E
5	NO LOAD	A	E
6	D	A	E
7	D	A	D
8	NO LOAD	A	D

Table 4: **COMPOSITION OF EACH COMBINATION**

A	B	C	D	E
4.5A Ignition	50 VA Pilot Duty plus 4.5A ignition	180 VA Ignition plus motor values with: 600VA inrush., 360 VA open, 250 VA hold	2A Pilot Duty	65 VA Pilot Duty plus Motor valves with: 3850 VA in rush., 700 VA open, 250 VA hold

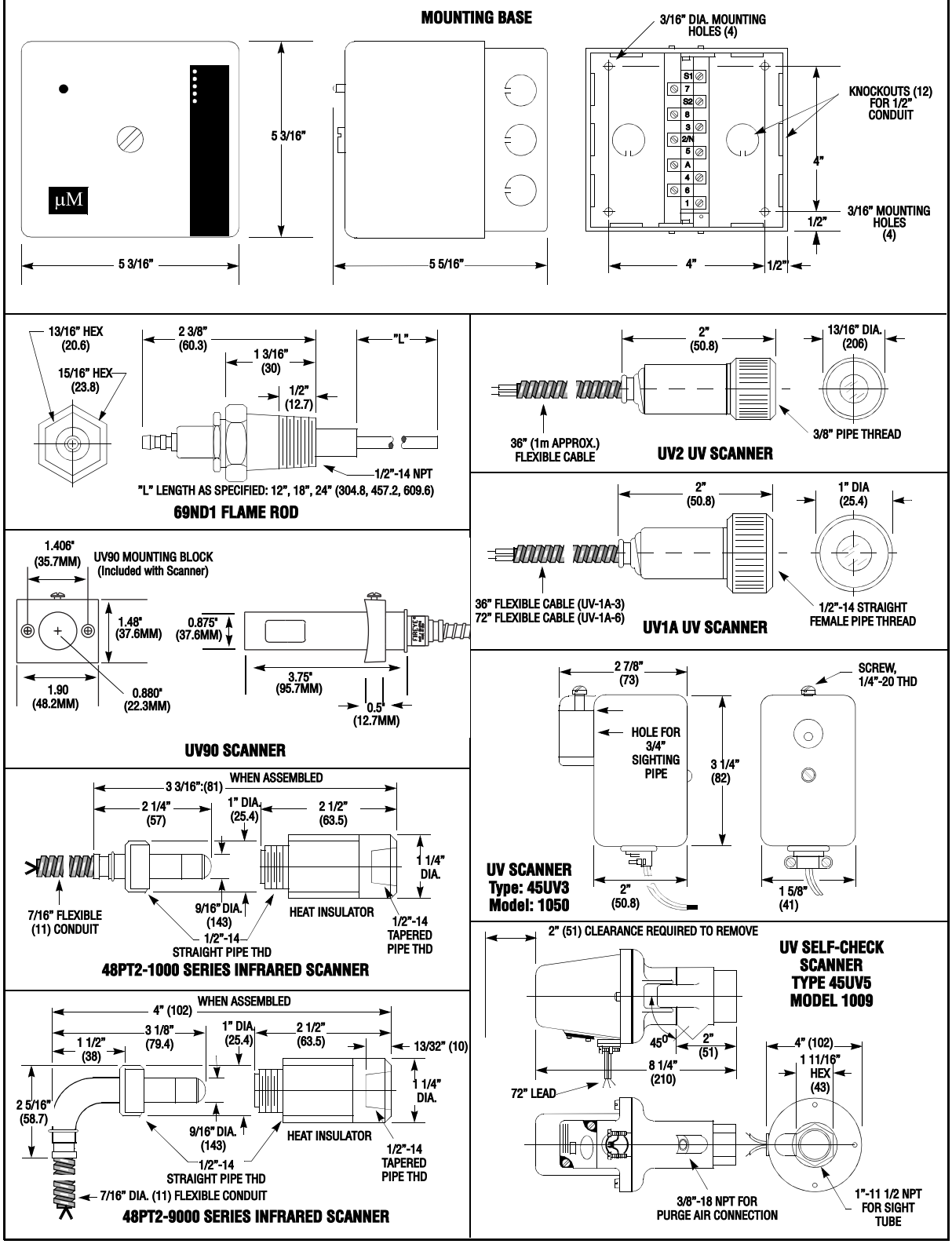

All dimensions in inches (millimeters in parentheses).



WARNING: This equipment is a Class B digital apparatus which complies with the Radio Interference Regulations, CRC c.1374.



CAUTION: Published load ratings assume that no control be required to handle inrush current more often than once in 15 seconds. The use of control switches, solenoids, relays, etc. which chatter will lead to premature failure. It is important to run through a test operation (with fuel shut off) following the tripping of a circuit breaker, a blown fuse, or any instance of chattering of any external current consuming devices.

APPROVALS

Underwriters Laboratories Inc.:

MCCZ File MP 1537
Controls, Primary Safety - Listed
MCCZ2 File MP1537
Controls, Primary Safety - Component
MCCZ7 File MP1537
Controls, Primary Safety Certified for Canada
MCCZ8 file MP1537
Controls, Primary Safety Certified for Canada - Component

Factory Mutual System (FM) Approved

UL approval does not apply to 230VAC operations.



WARNING: Selection of programmer and amplifier type for a particular application should be made by a competent professional, such as a Boiler/Burner technician licensed by a state or government agency, engineering personnel of the burner, boiler or furnace manufacturer (OEM) or in the performance of duties based on the information from the OEM.



WARNING: This equipment generates and can radiate radio frequency energy, and if not installed and used in accordance with the instruction manual may cause interference to radio communications. It has been tested and found to comply with the limits for a Class A computing device pursuant to Subpart J of part 15 of FCC Rules, which are designed to provide reasonable protection against such interference when operated in a commercial environment. Operation of this equipment in a residential area is likely to cause interference in which case the user, at his own expense, will be equipped to take whatever measures that may be required to correct the problem.



In order for the MicroM to gather and retain statistical and historic data such as burner hours, burner cycles, system hours and average flame signal, it is necessary that Terminal 1 be powered at all times. Removing power from Terminal 1 at the end of the firing cycle causes all data gathered during the previous 16 hours or last 9 cycles to be lost. For conversions or upgrades from older TFM or M-Series II controls that use MART1 amplifiers, it is necessary that Terminal 1 be directly powered with 120 VAC.

ORDERING INFORMATION

MicroM Chassis Types (For use with MEP1XX, MEP2XX, and MEP5XX, includes dust cover)	
MEC120	120 VAC input with standard plug-in board.
MEC120R	120 VAC input with remote reset capability.
MEC120D	120 VAC input with alpha-numeric display interface to ED510.
MEC120RD	120 VAC input with alpha-numeric display interface to ED510 and remote reset capability.
MEC120C	120 VAC input with interface to E500 Communication Interface and Modbus capability.
MEC120RC	120 VAC input with remote reset capability, alpha-numeric display interface to ED510, interface to E500 Communication Interface and Modbus capability.
MEC230	230 VAC input with standard plug-in board.
MEC230RC	230 VAC input with remote reset capability, alpha-numeric display interface to ED510, and Modbus capability.

MicroM Chassis Types (For use with MEP3XX, MEP4XX, and MEP6XX, includes dust cover)	
MEC320	120 VAC input with standard plug-in board.
MEC320R	120 VAC input with remote reset capability.
MEC320D	120 VAC input with alpha-numeric display interface to ED510.
MEC320RD	120 VAC input with alpha-numeric display interface to ED510 and remote reset capability.
MEC320C	120 VAC input with interface to E500 Communication Interface and Modbus capability.
MEC320RC	120 VAC input with remote reset capability, alpha-numeric display interface to ED510, interface to E500 Communication Interface and Modbus capability.
MEC320TS	120 VAC input with display interface to ED510, Modbus interface and auxiliary relay output with dry contact for controller interface (MED8).
MEC480	230 VAC input with standard plug-in board.
MEC480RC	230 VAC input with remote reset capability, alpha-numeric display interface to ED510, and Modbus capability.

MicroM Programmer Models (For use with MEC120 and MEC 230 Chassis)	
MEP100	Relight operation, 10 sec. PTFI.
MEP101	Relight operation, allow flame signal until 60 seconds after interlock closed.
MEP102	Non-recycle on flame fail, 5 second PTFI.
MEP103	Fixed 10 second SISP*, 10 second MTFI, re-try once on igniter failure, fixed 30 second post purge.
MEP104	Non-recycle on flame fail, 10 second PTFI.
MEP105	Non-recycle on flame fail, lockout on air-flow open with flame present, 10 second PTFI.
MEP106	Same as MEP100. 12 second pre-purge, added reset from lockout via line voltage.
MEP107	Same as MEP100. Force 5 minute purge delay after main flame fail.
MEP108	Same as MEP100 with 0 second purge, 15 second PTFI, non-recycle on flame fail. Not FM approved.
MEP109	Immediate ignition and pilot, 10 second fixed PTFI, 10 second MTFI, intermittent pilot, non-recycle on flame fail.
MEP100P	Relight operation, 10 sec PTFI, fixed 15 second post purge.
MEP130	Same as MEP100, 30 second PTFI. Not FM approved.
MEP230	Selectable purge timing (7, 30, 60, 90 sec.) 10 sec PTFI timing, recycle/non-recycle, post purge, prove air open at start.
MEP230H	Same as MEP230 with 8 second pilot stabilization.
MEP235	Same as MEP230 with lockout on air flow open 10 seconds after the start of a cycle, selectable recycle/nonrecycle lockout on air flow open after flame is proven and dedicated lockout after loss of flame.
MEP236	Same as MEP230 with additional 6 second igniter on time with main fuel. To be used with intermittent pilot only.
MEP237	Same as MEP230 with fixed PTFI timing and check/run switch. Used with MEDC2 amplifier to provide operation with 85 Series (Phoenix) and 95 Series (InSight) scanners.
MEP238	Same as MEP230. Ignition de-energized 3 seconds after pilot flame detected. Provides 8 second pilot stabilization period.
MEP290	Same as MEP230 except selectable post purge is 0 or 90 seconds.
MEP560	Same as MEP230H, 10 second main trial for ignition, run-check switch.
MEP561	Same as MEP560 without 8 second pilot stabilization. Selectable purge time of 7s, 10s, 15s, 30s.
MEP562	Same as MEP560, lockout on loss of air flow, non-recycle operation only.
MEP564	Same as MEP560. Selectable purge time of 7s, 30s, 60s, 240s.
MEP536	Same as MEP230, 10 second main trial for ignition, run-check switch, will not lockout on air flow open during purge.
MEP537	Same as MEP536 except provides one recycle on main flame failure.

*Spark Igniter Sensing Period

MicroM Programmer Models (For use with MEC320 and MEC 480 Chassis)	
MEP300	Relight operation, 10 sec. fixed PTFI, 5 sec.pilot proving period, 5 second MTFI. lockout on flame fail during PTFI, pilot proving and MTFI. Recycle on air flow open. No post purge. Reset on line voltage.
MEP304	Non-recycle on flame fail, 5 sec. purge, 10 sec.fixed PTFI, 5 sec. pilot proving, 10 sec.MTFI, interrupted pilot, early spark termination.
MEP335	Non-recycle on flame fail, 30 second purge, 35 second hot surface ignition on terminal 4, 3 second PTFI on terminal 3, 5 second pilot proving period, intermittent pilot, 15 second post purge. Manual reset only.
MEP397	Recycle on main flame fail, 15 sec. purge, 7 second fixed PTFI, 5 sec. pilot proving 5 sec. MTFI, early spark termination and interrupted pilot. Recycle on air flow failure. No post purge, run/check switch. Reset on line voltage.
MEP437	Recycle once on main flame failure, selectable 5 or 10 sec. fixed PTFI, selectable interrupted or intermittent pilot, 5 sec. MTFI, selectable purge time to 240 seconds, main valve proof of closure, 15 sec. post purge. Reset on line voltage.
MEP696	Provides 30 sec. pre-purge, lockout on airflow after 10 sec., 10 sec. PTFI, 5 sec. pilot proving, early spark termination, 5 sec. MTFI, interrupted pilot, selectable recycle/non-recycle on flame fail, 60 sec. post purge, selectable baud rate for communications, output for external controller operation.
MEP697	Provides dip-switch selectable pre-purge, selectable air flow proving at startup, selectable post purge, selectable 5/10 sec. PTFI, 5 sec. pilot proving early spark termination, 5 sec. MTFI, interrupted pilot, selectable recycle/non recycle on flame fail, output for external controller operation.

MicroM Amplifier Models:	
MEUV1	UV amplifier, 0.8 second FFRT, uses UV1A, UV2, UV8A, UV90 and 45UV3-1050 scanners.
MEUV4	UV amplifier, 3 second FFRT, uses UV1A, UV2, UV8A, UV90 and 45UV3-1050 scanners.
MEUVS1	UV Self-Check amplifier, 0.8 second FFRT, uses 45UV5-1009 scanner.
MEUVS4	UV Self-Check amplifier, 3 second FFRT, uses 45UV5-1009 scanner.
MERT1	Flame Rod amplifier, 0.8 second FFRT, uses 69ND1.
MERT4	Flame Rod amplifier, 3 second FFRT, uses 69ND1.
MEIR1	Infrared amplifier, 0.8 second FFRT, uses 48PT2 scanner.
MEIR4	Infrared amplifier, 3 second FFRT, uses 48PT2 scanner.
MECD1	Cadmium sulfide amplifier, 0.8 second FFRT, uses CS1A5 scanner.
MECD4	Cadmium sulfide amplifier, 3 second FFRT, uses CS1A5 scanner.
MEDC2	Contact input amplifier for use with MEP237 to provide operation with 85 Series (Phoenix) and 95 Series (InSight) scanners

Optional Plug-In Board Modules:	
MED1	Standard local reset switch.
MED2	Same as MED1 with display output.
MED3	Same as MED1 with remote reset.
MED4	Same as MED1 with display output and remote reset.
MED5	Same as MED1 with display output and RS485 communications.
MED6	Same as MED1 with display output, remote reset and RS485 communications.
MED7	Same as MED1 with RS485 communications.
MED8	Same as MED1 with display output, RS485 Modbus interface and auxiliary relay output with normally closed dry contact for controller interface.
MED9	Same as MED1 with display output, RS485 Modbus interface and auxiliary relay output with normally open dry contact for controller interface.

Wiring Base (Common for all Controls):	
61-3060	Closed wiring base, surface mounting.
61-5042	Open wiring base, cabinet mounting.

Accessories	
ED510	Two line by 16 character, back lit LCD display with keypad.
ED580-2, -4, -8	Remote display cable with RJ45 connection in 2, 4 or 8 foot long lengths. To be used with the appropriate daughter board.
EC485	RS232 to RS485 converter with power supply and RJ12 jack.
UC485	USB to RS485 converter. Supplied with USB cable.
SMDK-1004	Serviceman's display kit used for diagnosing MicroM system. Consists of ED510 equipped with back plate, MED daughter board and ED580-4.
129-145-1, -2, -3	ED510 remote display mounting kit with 4', 8' or 2' cable respectively. Provides NEMA 4 protection.
IT1000	Monitoring device using cellular networks. Provides various reporting methods

FLAME SCANNERS

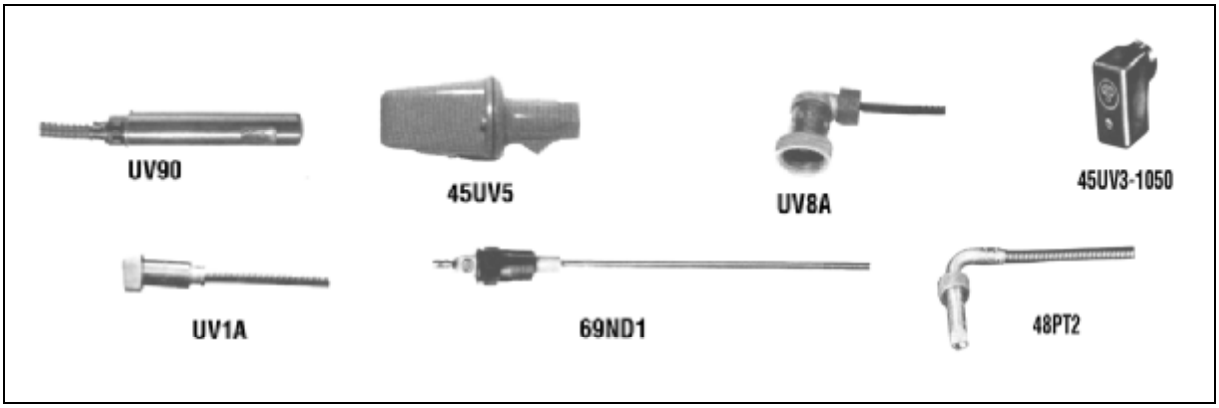

CAUTION: The UV1A, UV2, UV8A, UV90 and 45UV3 ultra-violet flame scanners and associated amplifier modules are non self-checking UV systems and should be applied only to burners that cycle often (e.g.: a minimum of once per 12 hours) in order for the safety checking circuit to be exercised. If component checking is required during burner operation for constantly fired burners, utilize the self-checking ultra-violet flame scanners (45UV5) with associated amplifier module (MEUVS1, MEUVS4) or the infrared flame scanner (48PT2) with associated AutoCheck amplifier (MEIR1, MEIR4).

For a complete system, choose one of each of the following:

- Chassis
- Programmer Module
- Amplifier Module
- Flame Detector
- Wiring Base

WARNING: Installer must be trained and qualified. Follow the burner manufacturer's instructions, if supplied. Otherwise, proceed as follows:

INSTALLATION OF CONTROL, SCANNERS AND FLAME DETECTORS

Wiring Base

Mount the wiring base on the burner or on a panel. The location should be free from excessive vibration and within the specified ambient temperature rating. The base may be mounted in any angular position.

All wiring should comply with applicable electrical codes, regulations and local ordinances. Use moisture resistant wire suitable for at least 90 degrees C. Good electrical wiring practice should be followed to ensure an adequate ground system. Refer to Fireye Service Note SN-100 separately and General Grounding Rules later in this document for grounding methods.

A good ground system should be provided to minimize the effects of AC quality problems. A properly designed ground system meeting all the safety requirements will ensure that any AC voltage quality problems, such as spikes, surges and impulses have a low impedance path to ground. A low impedance path to ground is required to ensure that large currents involved with any surge voltages will follow the desired path in preference to alternative paths, where extensive damage may occur to equipment.

Circuit recommendations are found on pages 38 through 43. Consult the factory for assistance with non-standard applications.

WARNING: Controls require safety limits utilizing isolated mechanical contacts. Electronic limit switches may cause erratic operation and should be avoided.



Care must be taken to NOT route the high energy ignition wire in close proximity to the flame sensor wiring, particularly when using MERT amplifier.

INSTALLING THE PROGRAMMER AND AMPLIFIER MODULES

WARNING: Remove power from the control before proceeding.

FIGURE 1. .

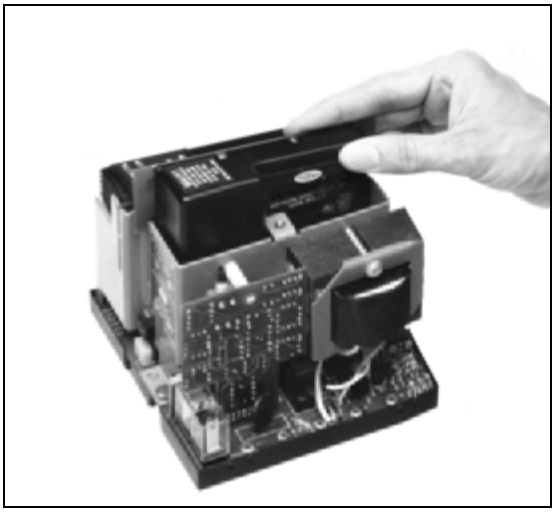

AMPLIFIER

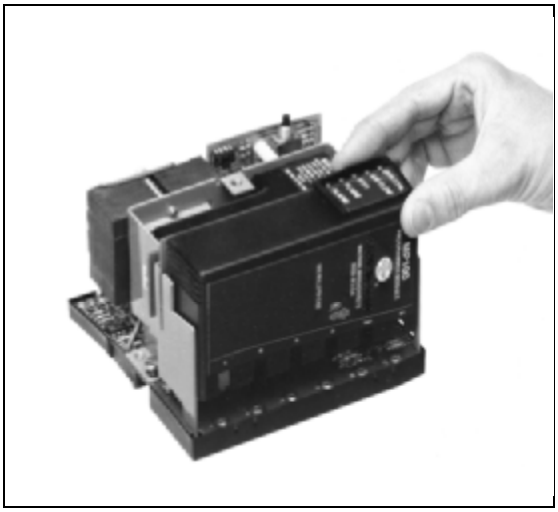

PROGRAMMER

Select the appropriate programmer and amplifier modules for your application. Remove the dust cover from the chassis. Insert the amplifier module into the slot in the corner of the chassis and gently push the module into position. Insert the programmer module into the slot at the right side of the chassis and gently push the module into position.

NOTE: Refer to programmer dipswitch settings on page 11 for the proper setting of the dipswitches for those programmers with this feature.

WARNING: Turn off the power when installing or removing the control.

Replaceable Fuse

The chassis modules are designed with a field replaceable fuse. The fuse is located on the printed circuit board below the transformer. In the event the fuse becomes OPEN, the Operating Control, PTFI, and Flame LED's will light. However, KL or KF (Wiring Arrangements section on pages 33 through 38) will not be energized and the control will lock out and indicate Lockout, Check Blown Fuse. The fuse will blow as a result of an overload condition on Terminals 3, 4, or 5. To replace the fuse, remove power from the system and using a small screwdriver or similar tool, install a Fireye replacement fuse (P/N 23-197) or equivalent 10 amp fuse (e.g. Wickman # 19373-071-K).

FOR MEC230, ORDER FIREYE REPLACEMENT FUSE P/N 23-198 OR EQUIVALENT 4 AMP FUSE (E.G. WICKMAN # 19373-062-K).

WARNING: Disconnect power before servicing.

FIGURE 2.

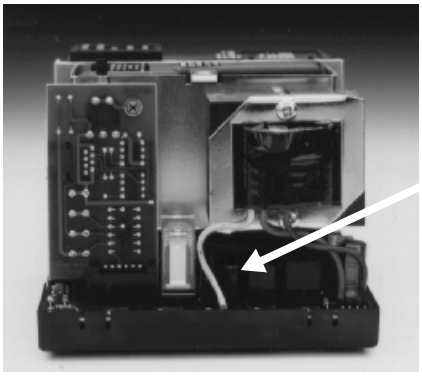

PROGRAMMER DIPSWITCH SETTINGS

NOTE: The dipswitch settings become permanently stored within the programmer's eeprom memory after 8 hours of continuous electrical operation.

The first 8 hours of continuous operation is determined from the value of system hours being accumulated by the MicroM. System hours are stored to memory (eeprom) automatically every 1,000 minutes or at the occurrence of a lockout. Therefore, any lockout that occurs during the first 8 hours will cause the system hour value to become the time when the last lockout occurred. If power is removed and restored, the continuous 8 hours feature will be reduced by the time when the lockout occurred.

This allows sufficient opportunity to make the appropriate selection, test and checkout the system. Once stored, the settings cannot be altered.

The MEP200 and MEP500 series programmers have a series of 6 dipswitches (see Figure 3) which allow the user to program the purge timing, trial for ignition timing, enable post purge, enable proof of air flow open at start and select recycle/non-recycle operation.

MicroM Programmer Dip Switch Configuration

(see bulletin MC-3200 for MEP696 settings)

<table>
<tr><th colspan="6">SWITCH</th><th colspan="3">FUNCTION</th><th>NOTES</th></tr>
<tr><td>6</td><td>5</td><td>4</td><td>3</td><td>2</td><td>1</td><td>STD</td><td>MEP561</td><td>MEP564</td><td rowspan="5">PURGE
TIME
SECONDS</td></tr>
<tr><td colspan="4" rowspan="4"></td><td>C</td><td>C</td><td>7</td><td>7</td><td>7</td></tr>
<tr><td>C</td><td>O</td><td>30</td><td>10</td><td>30</td></tr>
<tr><td>O</td><td>C</td><td>60</td><td>15</td><td>60</td></tr>
<tr><td>O</td><td>O</td><td>90</td><td>30</td><td>240</td></tr>
<tr><td colspan="3" rowspan="2"></td><td rowspan="2">C
O</td><td colspan="2" rowspan="2"></td><td>DISABLED
15 SECONDS</td><td colspan="2">POST*
PURGE</td><td rowspan="2">* The MEP290 Programmer module has selectable post purge of 90 seconds.</td></tr>
<tr><td colspan="3">5
10</td><td colspan="2">PTFI
TIME</td></tr>
<tr><td colspan="2" rowspan="2"></td><td rowspan="2">C
O</td><td colspan="3" rowspan="2"></td><td>DISABLE
ENABLE</td><td colspan="2">PROVE AIR FLOW OPEN AT START</td><td rowspan="3"></td></tr>
<tr><td>C</td><td colspan="5" rowspan="2"></td><td colspan="3">RECYCLE</td></tr>
<tr><td>O</td><td colspan="3">NON-RECYCLE</td></tr>
</table>

Note: C refers to switch closed position, closed position is when the switch is toward the printed circuit board. O refers to switch open position or when the switch is moved away from the printed circuit board. Indicating arrow on top of programmer cover points toward closed position.

Once the switches are set, they become permanently stored after 8 hours of continuous operation or they can be manually set through the use of the optional ED510 display. Refer to the section using the optional ED510 display for detailed information.

Where applicable, each MicroM programmer is shipped with dip-switch 6 set to non-recycle on flame fail, dipswitch 4 set to 5 second PTFI time, and dipswitches 1 & 2 set to the longest purge time.

FIGURE 3.

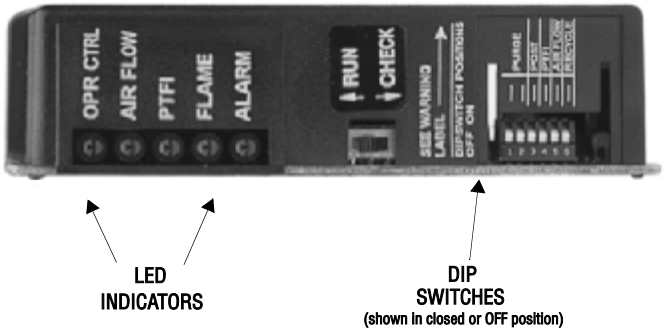

Dipswitch Definitions

Purge Time: Begins after power is detected on Terminal #7 (limit control) and Terminal #6 (running interlock switch) and no flame (real or simulated) is detected.

Post Purge: If enabled, Terminal #8 (blower motor or contactor) will remain energized for 15 seconds after terminal #7 or Terminal #6 is detected as open.

PTFI Time: The maximum length of time that Terminal #3 and Terminal #4 will be energized after the pre-purge period to detect pilot flame. For all programmers, the MicroM forces a 3 second delay before advancing to the next logic module (Stabilization, MTFI or Auto) after flame is detected during the PTFI period. This is to allow establishment of a pilot and stabilization of the fuel flow.

Prove Air Flow Open: After power is detected on Terminal #7 (limit control) and before energizing Terminal #8 (blower motor or contactor) no power must be detected on Terminal #6 (running interlock switch). If power is detected on Terminal #6, the MicroM will hold for 60 seconds after which safety lockout will occur. On recycle operation, if this is enabled, Terminal #8 will be de-energized to allow Terminal #6 to open.

Recycle / Non-Recycle: Applies to flame failure during the Run condition. If a flame failure occurs, the control will de-energize Terminals #3 and #5 and if Recycle is selected a new prepurge period will begin. Lockout will occur immediately and the alarm will energize 15 seconds after flame failure if Non-Recycle is selected. Unless otherwise stated (see Programmer Description), the MicroM recycles on all occurrences of air flow failure. The MEP235 and MEP562 will always initiate a lockout on flame failure.

LED INDICATOR LIGHTS

All MicroM Programmer Modules have 5 LED lights to indicate the operating status of the control and also to display the coded sequence under locked out conditions. The function of the lights under a normal operating condition is:

Operating Control: This LED is energized whenever the burner control switch and all other various limit switches are closed and power is applied to Terminal #7.

Interlock or Air Flow: This LED is illuminated whenever power is detected on Terminal #6, indicating the air flow switch or other running interlock is closed. If the operating control is closed and the running interlock switch remains open, this LED will flash at a 1 second rate indefinitely for the MEP100 and MEP200 family. Lockout will occur if the switch remains open for 10 minutes in the MEP500 family. This LED will blink when configured as a flame switch and flame detected.

PTFI: This LED is illuminated only during the pilot trial for ignition period and the stabilization period when so equipped.

Flame: This LED is on whenever a flame signal is detected, and the control is not in a locked out state.

Alarm: This LED flashes when an alarm condition is detected and is used as an address indicator (see communication).

During an alarm condition, the Alarm LED is made to flash at approximately a 1 second rate. The remaining four LEDs are illuminated as a coded sequence identifying the reason for the lockout. For instance, for a LOCKOUT - FLAME FAIL- PTFI, the INTERLOCK, PTFI and FLAME LED's will all be lit steady, with the Alarm LED flashing. This remains true if power is removed and then restored in a locked out condition.

While in the Idle or Off state, the LEDs are made to flash sequentially to show the operational status of the control every minute. The LEDs can be tested by pressing and releasing the Reset push button, while in the Idle or Off state.

LOCKOUT CODES

MSGN		DESCRIPTION	OP CTRL	AIRFLOW INTLCK	PTFI	FLAME	ALARM
DEC	HEX						
6	6	Lockout Line Frequency Noise Detected	●	❍	❍	●	✶
7	7	Lockout Flame Fail - PTFI	❍	●	●	●	✶
15	0F	Lockout Fault Unknown	●	●	●	●	✶
16	10	Lockout Amplifier High Count Fail	❍	❍	❍	❍	✶
19	13	Lockout Flame Fail - MTFI	❍	❍	●	●	✶
20	14	Lockout False Flame - STANDBY	❍	●	❍	❍	✶
21	15	Lockout Intrlck Open	●	●	●	❍	✶
22	16	Lockout Intrlck Closed	❍	●	●	❍	✶
24	18	Lockout Chassis Opto	●	●	❍	●	✶
37	25	Lockout Flame Fail - AUTO	❍	●	❍	●	✶
39	27	Lockout Fuel Valve State Change	❍	❍	❍	●	✶
54	36	Lockout Check Chassis	❍	❍	❍	●	✶
55	37	Lockout Check Programmer	❍	❍	●	❍	✶
56	38	Lockout Check Amplifier	●	❍	❍	❍	✶
58	3A	Lockout Amplifier Auto Check Fail	●	❍	●	❍	✶
59	3B	Lockout Check BLOWN FUSE	●	❍	●	●	✶
76	4C	Lockout Check Scanner	●	●	❍	❍	✶
N/A	N/A	System Error	✶	✶	✶	✶	●

❍= NOT LIGHTED
●= LIGHTED
✶= FLASHING

All LED's Flashing indicates defective programmer.

All MicroM chassis are shipped with a convenient peel off label that can be applied to any surface (inside cover) for future reference.

DIAGNOSTIC MESSAGES - TROUBLESHOOTING GUIDE

	POSSIBLE CAUSE	SOLUTION
Check Programmer	Voltage on Terminal 5 at improper time.	Inspect wiring to main fuel valve
	Welded watchdog relay	Replace MEC chassis
	Internal diagnostic failure	Replace MEP programmer
Check Chassis	Voltage on Terminal 3 or 4 at improper time.	Inspect wiring to pilot valve and igniter.
	Welded watchdog relay	Replace MEC chassis
Chassis Opto	Opto-Coupler(s) short circuited	Replace MEC chassis
Amplifier High Count Fail	Amplifier signal level high	Replace Amplifier module
Amplifier Auto Check Fail	Flame signal too high	Use orifice in sight pipe
	Internal Amplifier diagnostic fault	Replace Amplifier module
Check Scanner	Defective shutter	Inspect scanner wiring, replace scanner
	UV tube false firing	Replace UV tube or scanner
Check Blown Fuse	No power detected on terminal 3	Inspect defective pilot valve or igniter
	Defective fuse	Replace fuse
Line Frequency Noise Detected	Spikes detected on AC mains	Check for SCR motors or DC drives
		Inspect ground system
Fuel Value State Change	Terminal 5 (main fuel) detected on during PTFI	Check external wiring or replace MEC chassis
Check Amplifier	Amplifier not passing diagnostic tests	Replace Amplifier module
System Error	Noise transient	Check high energy ignition noise location. Be sure it is not arcing to chassis or wrapped with scanner wiring.

PROGRAMMER DESCRIPTION

For replacement of UVM, TFM and M-II type controls, refer to the cross-reference provided at the end of this section.

MEP100 SERIES

MEP100 and MEP101

These programmers provide relight operation, in the event of a flame failure, pilot trial for ignition is reinitiated. The MEP101 will not lock out if flame signal is present during the Idle or Off cycle. With flame signal present, lockout will occur 60 seconds after the start of a cycle and the air flow switch is closed.

Pilot Ignited Burners

Refer to typical wiring arrangement beginning on page 38.

Normal Operation

With power applied and the limit operating control circuit (1-7) closed, the Operating Control LED illuminates, the burner motor circuit is energized (Terminal 8).

After the air flow proving switch (7-6) closes, the interlock (air flow) LED is illuminated and a short time delay period (3-5 seconds) begins.

At the expiration of the safe start check period, a 10 second pilot trial for ignition (PTFI) period is initiated, illuminating the PTFI Led. Power is applied to Terminal 3, energizing the pilot gas valve and to Terminal 4, energizing the spark ignition.

At the detection of pilot flame, the FLAME LED is illuminated, and the programmer holds that position for 3 seconds to allow the to pilot stabilize.

Power is then applied to Terminal 5 energizing the main fuel valve and removing power from Terminal 4, turning off the spark igniter.

When the operating control opens, the control de-energizes Terminal 3 and Terminal 5 and the programmer reverts back to an Idle state.

Safety Shutdown

In the event pilot flame is not detected at the end of the 10 second PTFI period, the pilot gas valve and spark ignition are de-energized. A safety lockout occurs which de-energizes the burner motor and energizes the lockout alarm relay circuit, lighting the Alarm LED, 15 seconds after the safety lockout occurs. Manual reset is required.

In the event of a flame failure during a firing period, the main fuel valve is de-energized (Terminal 5) and the spark ignition is re-energized (Terminal 4), the PTFI period begins again as described above under Normal Operation.

In the event of the interlock switch opening, the main fuel valve and pilot valve are de-energized. The control reverts back to the Idle state and begins again a new cycle starting with the safe start check period.

Direct Spark Ignited Burners

Refer to typical wiring arrangement illustrated on pages 40 and 41.

Normal Operation

With power applied and the limit operating control circuit (1-7) closed, the Operating Control LED illuminates, the burner motor circuit is energized (Terminal 8).

The interlock proving switch (7-6) closes, the INTRLCK LED is illuminated and a short time delay period (3 seconds) begins (safe start check period).

At the expiration of the safe start check period, a 10 second PTFI period is initiated. The PTFI Led is illuminated, power is applied to Terminal 3, energizing the main fuel valve and to Terminal 4, energizing the spark ignition.

At the detection of main flame, the FLAME LED is illuminated, and the programmer holds that position for 3-5 seconds to allow the main flame to stabilize.

Power is then removed from Terminal 4, turning off the spark igniter.

When the operating control opens, the control de-energizes Terminal 3 and Terminal 5 and the programmer reverts back to an Idle state. Terminal 8 is immediately de-energized.

Safety Shutdown

In the event the main flame is not detected at the end of a 10 second PTFI period, the main fuel valve and spark ignition are de-energized. A safety lockout occurs which de-energizes the burner motor and energizes the lockout alarm relay circuit, lighting the Alarm LED, 15 seconds after the safety lockout occurs. Manual reset is required.

In the event of a flame failure during a firing period, the secondary fuel valve (if used) is de-energized and the spark ignition is re-energized, the PTFI period begins again as described above under Normal Operation.

In the event of the interlock switch opening, the main fuel valve and pilot valve are de-energized. The control reverts back to the Idle state and begins again a new cycle starting with the safe start check period.

MEP102 & MEP104

The MEP102 and MEP104 programmers operate the same as the MEP100, except the PTFI time is limited to 5 seconds and 10 seconds respectively, the relight feature is eliminated and instead, the control will enter safety lockout on flame failure. Recycle to the start of safe start check period to begin a new cycle will occur on air flow switch opening.

MEP103

The MEP103 programmer implements a fixed 10 second spark igniter sensing period (SISP) used to detect spark, followed by a 10 second main trial for ignition (MTFI). Safety lockout occurs on flame failure during the main firing period (AUTO). Recycle occurs on air flow switch opening. If spark is not detected during the spark igniter sensing period the control makes one attempt to establish pilot

following a post purge of 30 seconds and a safe start check. Failure to ignition spark on the second attempt results in safety lockout.

MEP100P

The MEP100P programmers provides a fixed 15 second post purge period upon detection of the operating Control (1-7) or Air Flow switch (7-6) opening.

MEP100 as FLAME SWITCH (refer to Figure 11)

For systems that require flame switch operation, that is, relay KF will toggle on with flame signal and off without flame signal, the MicroM provides this function when equipped with an MEP100 programmer. To operate as a flame switch, Terminals 1 and 6 **MUST** be powered with 120 VAC while Terminal 7 **MUST** be left unpowered. Terminals 3, 4, and 5 will provide an isolated (KL relay not energized) set of contacts with Terminal 3 being the common input, Terminal 4 will be normally closed and Terminal 5 will be normally open. **If Terminal 7 is powered or if Terminal 6 is non-powered and a flame signal is present, the MicroM will lockout after 1 minute and Terminals 4 and 5 will no longer switch with flame signal.** Refer to Figure 11 for configuration wiring. Air Flow LED will blink while flame is detected.

TIMING CHART

TYPE MEP100

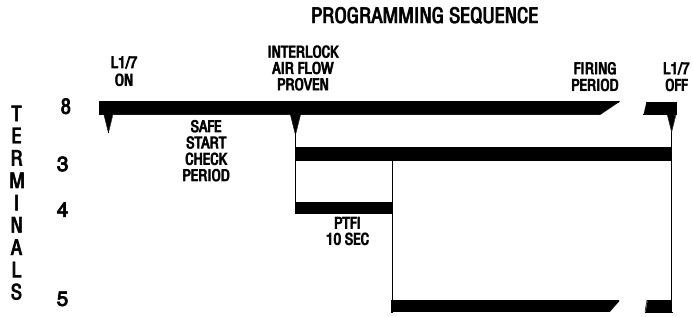

Terminal #5 is energized 3 seconds after flame is detected.
Re-ignited PTFI on flame fail after Terminal 5 energized.
Recycle on loss of interlock (air flow) after flame proven.

MEP101

Same as MEP100 but will tolerate flame signal during "Off" cycle.

MEP102

PTFI time limited to 5 seconds, lockout on flame fail.

MEP104

PTFI time limited to 10 seconds, lockout on flame fail.

MEP200 SERIES

The MEP200 Series programmers come equipped with a bank of dipswitches that allow user selectable prepurge timing, selectable PTFI timing, selectable post purge, selectable air flow proven open at start, and selectable recycle/non-recycle operation. Refer to PROGRAMMER DIPSWITCH SETTINGS for detailed information.

Recycle operation refers to flame failure during the main (AUTO) firing period. In the event of a main flame failure, power is removed from Terminal 3 and Terminal 5. If selected by the dipswitch, the control will enter a post purge period for 15 seconds and revert back to the Idle state where the pre-purge period begins.

If non-recycle operation is selected, in the event of a main flame failure, power is removed from Terminal 3 and Terminal 5. The control will enter a forced post purge period of 15 seconds, after which the Alarm LED is illuminated and the alarm relay is energized putting power on Terminal A.

The MEP230H programmer operates the same as the MEP230 with the exception of an additional 8 second pilot stabilization. After flame is detected during the trial for ignition period, the powering of Terminal 5 is delayed for eight (8) seconds. Terminal 4 remains powered during the stabilization period. This function is offered primarily for two-stage light oil burners, to assure a specific delay between light off of the first and second stage, and to provide additional ignition timing to improve flame stabilization.

The MEP290 programmer operates the same as the MEP230 with the exception that post purge is selectable from 0 to 90 seconds.

MEP235

The MEP235 programmer operates the same as the MEP230 except flame failure during the firing period causes lockout. Dipswitch #6 refers to Recycle/Non-Recycle on a loss of air flow (Terminal 6) after flame is proven. The running interlock circuit (Terminal 6) must be proven closed within 10 seconds after start of a cycle.

MEP236

The MEP236 programmer provides a 3 second main flame stabilization period by keeping Terminal #4 (igniter) energized while the main fuel valve (Terminal #5) opens. The MEP236 is to be used on an intermittent pilot only.

TIMING CHARTS

TYPE MEP230

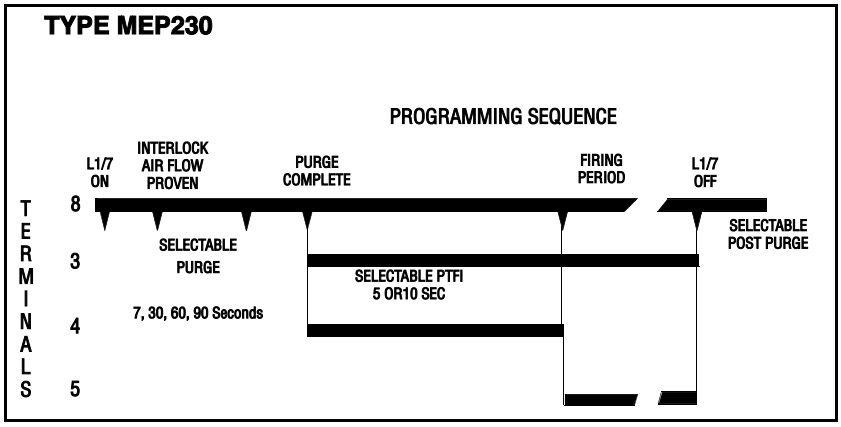

Terminal #5 is energized 3 seconds after flame is detected.
Selectable Recycle/Non-Recycle operation on loss of flame after Terminal 5 energized.
Recycle on loss of interlock (air flow) after flame proven.
Selectable air flow (interlock circuit) proven at start.

Selectable purge times are 7, 30, 60 and 90 seconds.

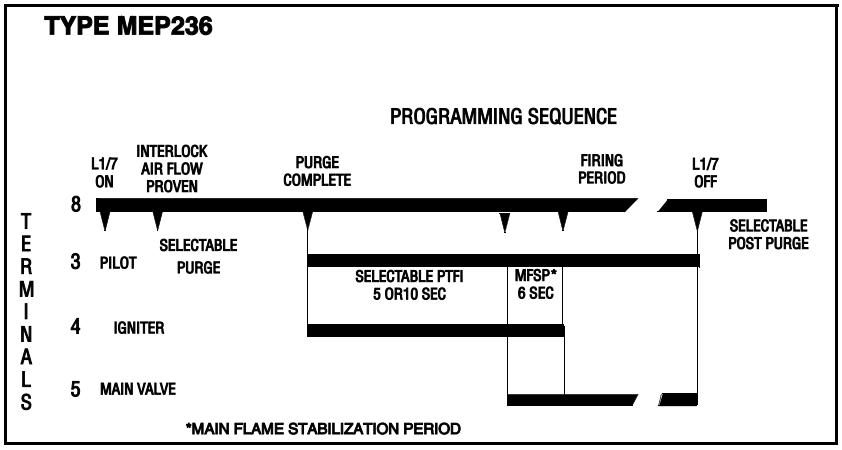

Terminal #5 is energized 3 seconds after the flame is detected.

Selectable Recycle/Non-Recycle operation on loss of flame after flame is proven.

Igniter remains on for 6 seconds after main valve opened.

Intermittent pilot only.

For interrupted pilot, use MEP536

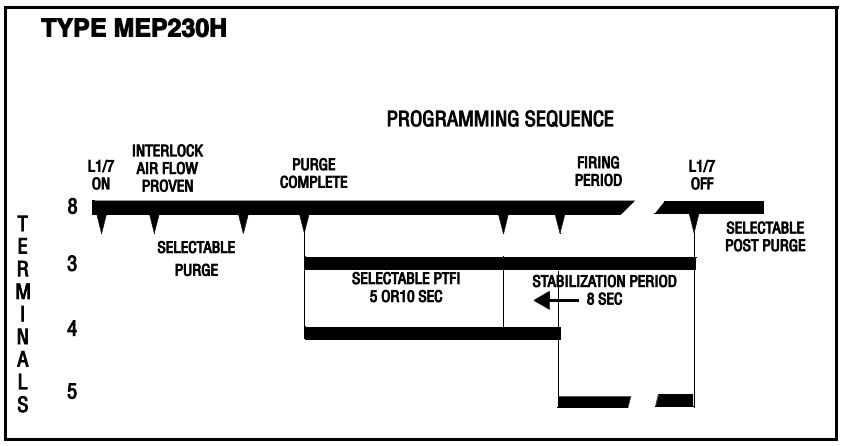

Pilot Stabilization timing begins as soon as flame is proven.

Selectable Recycle/Non-Recycle operation on loss of flame after Terminal 5 is energized.

Selectable air flow (interlock circuit) proven at start.

MEP500 SERIES

Refer to typical wiring arrangement illustrated on page 40.

The MEP500 Series Programmers provide an additional relay used to control Terminal 4 separately. This allows the implementation of a pilot stabilization period as well as main trial for ignition period. They also come equipped with a bank of dipswitches that allow the user selectable prepurge timing, selectable PTFI timing, selectable post purge, selectable air flow proven open at start, and selectable recycle/non-recycle operation. Refer to PROGRAMMER DIPSWITCH SETTINGS for detailed information.

A "run-check" switch is also provided to assist in testing size, position and stabilization of pilot in conjunction with the flame detector,

For the MEP560 and MEP562, after pilot flame is detected, the control enters an 8 second pilot stabilization period with Terminal 3 and Terminal 4 energized. At the expiration of the stabilization period, Terminal 5 is energized.

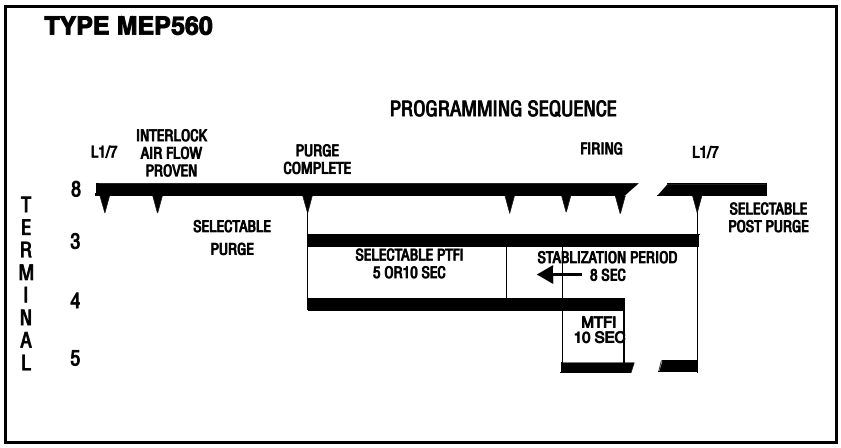

Pilot Stabilization timing begins as soon as flame is proven.

Selectable Recycle/Non-Recycle operation on loss of flame after Terminal 5 is energized.

Selectable air flow (interlock circuit) proven at start.

Recycle on loss of air flow (interlock circuit) after flame is proven.

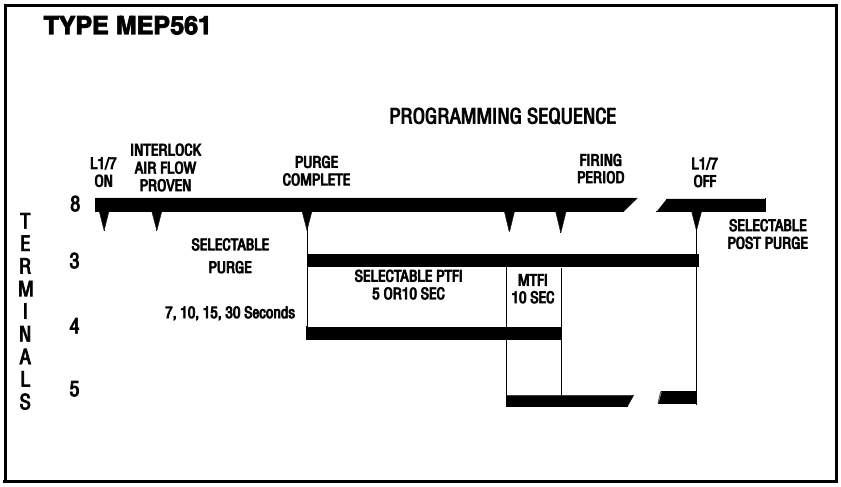

Selectable purge times are 7, 10, 15 and 30 seconds.

10 second timing begins 3 seconds after flame is proven.

Selectable Recycle/Non-Recycle operation on loss of flame after Terminal 5 is energized.

Selectable air flow (interlock circuit) proven at start.

Recycle on loss of air flow (interlock circuit) after flame is proven.

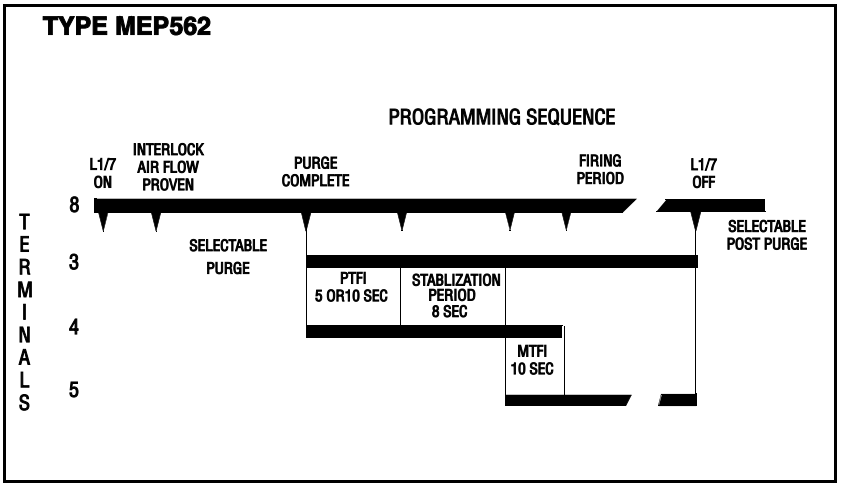

Pilot stabilization timing begins as soon as flame is proven.
Lockout on loss of air flow (interlock circuit) after flame is proven.
Lockout on flame fail.

MEP300/MEP600 SERIES

This programmer type must be used with the MEC320 or MEC480 type chassis. Refer to typical wiring arrangement illustrated on page 41.

The MEP300/MEP600 Series Programmers provide additional relays used to control Terminals 3 and 4 separately. This allows the implementation of early spark termination, pilot proving period and interrupted pilot operation. The MEP397, MEP696 and MEP697 programmers contain a "run-check" switch to assist in testing size, position and stabilization of pilot in conjunction with the flame detector.

The MEP696 and MEP697 provide a control line used to energized and de-energize a relay located on the MED8 and MED9 daughter boards.

TIMING CHARTS

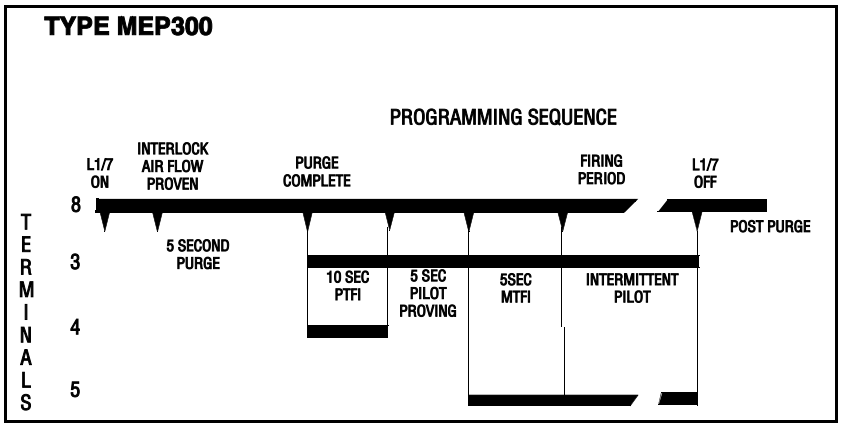

0 Second post purge on operating control open.
15 Second post purge on flame fail during PTFI, Proving and MTFI.
Lockout on flame fail during PTFI, Proving and MTFI.
Relight operation on main flame fail.
Recycle operation on air flow failure.
Reset from lockout from pushbutton or line voltage.

TYPE MEP304

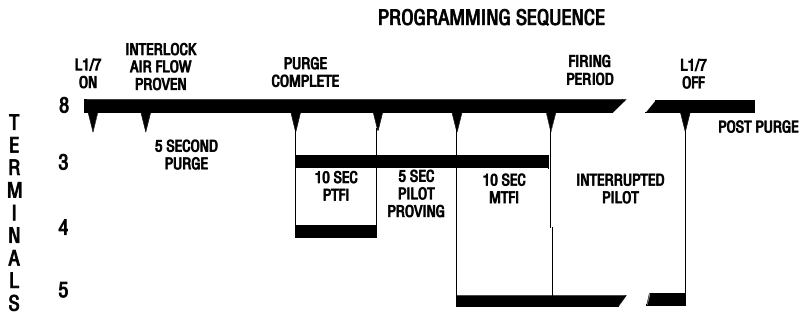

0 Second post purge on operating control open. 15 Second post purge on flame fail.

Non-recycle operation on flame fail.

Recycle operation on air flow failure.

TYPE MEP335

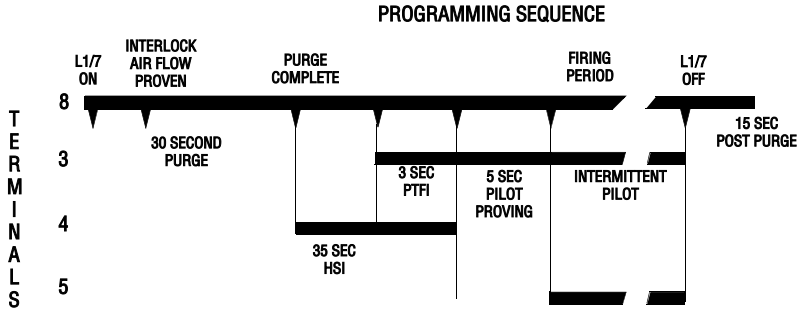

15 Second post purge

Non-recycle operation on flame failure.

Recycle operation on air flow failure.

Reset from lockout from pushbutton.

TYPE MEP397

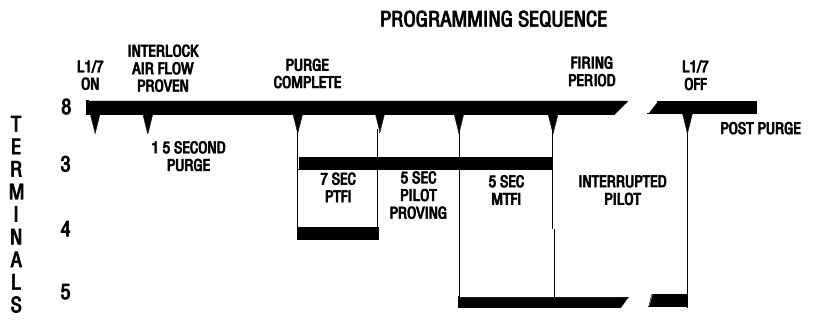

0 Second post purge on operating control open.

15 Second post purge of flame fail during PTFI, Proving and MTFI.

Lockout on flame fail during PTFI, Proving and MTFI.

Relight operation on main flame fail.

Recycle operation on air flow failure.

Reset from lockout from pushbutton or line voltage.

TYPE MEP696

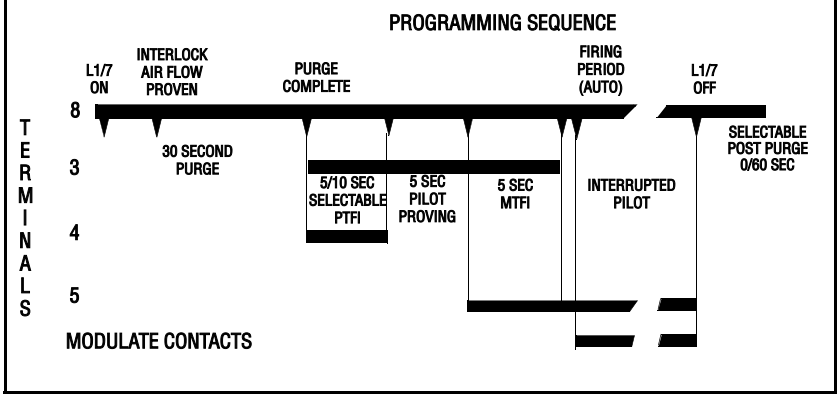

Lockout on flame fail.

Lockout occurs if air flow terminal 6 is not proven 10 seconds into purge.

Modulate contacts on daughter board change state 1 second into Auto.

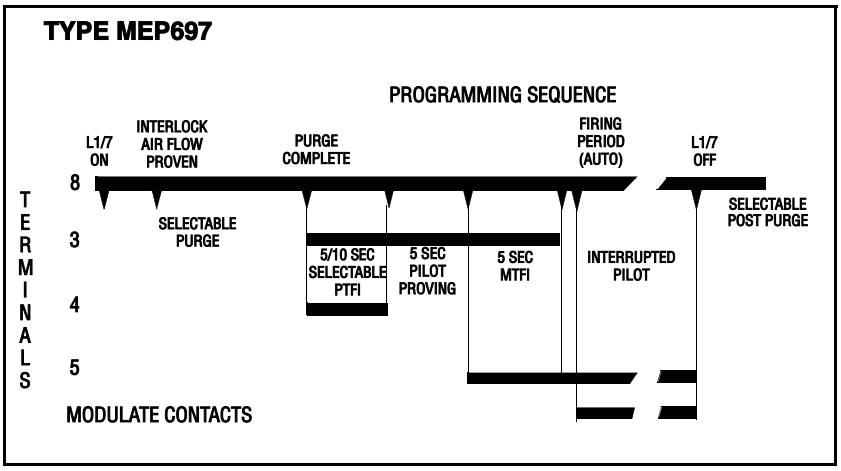

Lockout on flame fail.

Lockout on air flow switch opening while main flame energized.

Recycle/Non-recycle dipswitch controls lockout on air flow switch not closing 10 seconds into purge.

Modulate contacts on daughter board change state 5 seconds into Auto.

OPTIONAL PLUG-IN BOARDS

Description

A family of optional plug-in boards are available separately for the MicroM chassis to provide remote reset, remote alpha-numeric display and serial communications as a stand alone or in combination. Refer to ORDERING INFORMATION for MicroM Chassis types for units that have pre-installed functions.

FIGURE 4. PLUG -IN BOARD LOCATION AND INSTALLATION

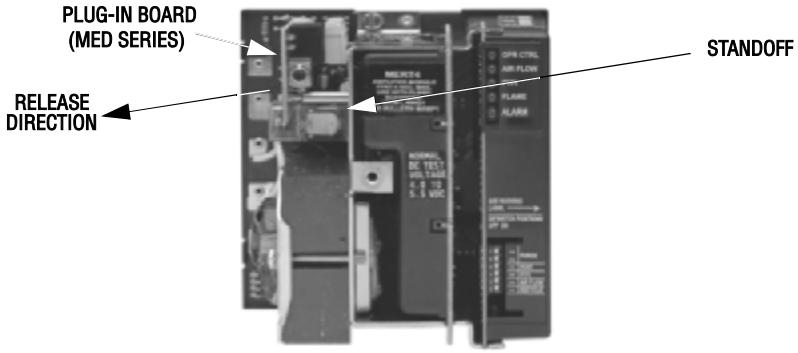

Installation

WARNING: Remove power when servicing the control.

For upgrading standard units or for replacing the installed plug-in board, grasp plug-in board at the top and pull away from the chassis, freeing the unit from the retaining standoff. Lift plug-in board up and away from connector located on chassis board. Guide new plug-in board into the same connector and push onto standoff.

Function

Any MicroM chassis type with the appropriate plug-in board installed provides remote reset capabilities in the event of a lockout condition. A remote reset switch consists of a dry contact such as a remote momentary push-button wired to the two (2) terminals located on the plug-in board as shown in Figure 5. The reset switch will also force the MicroM to recycle if depressed and released during the purge or run period.

A plug-in board (MED8) is pre-installed in the MEC320TS chassis to provide local reset, remote alpha-numeric display, serial communications and normally closed relays.

FIGURE 5. REMOTE RESET

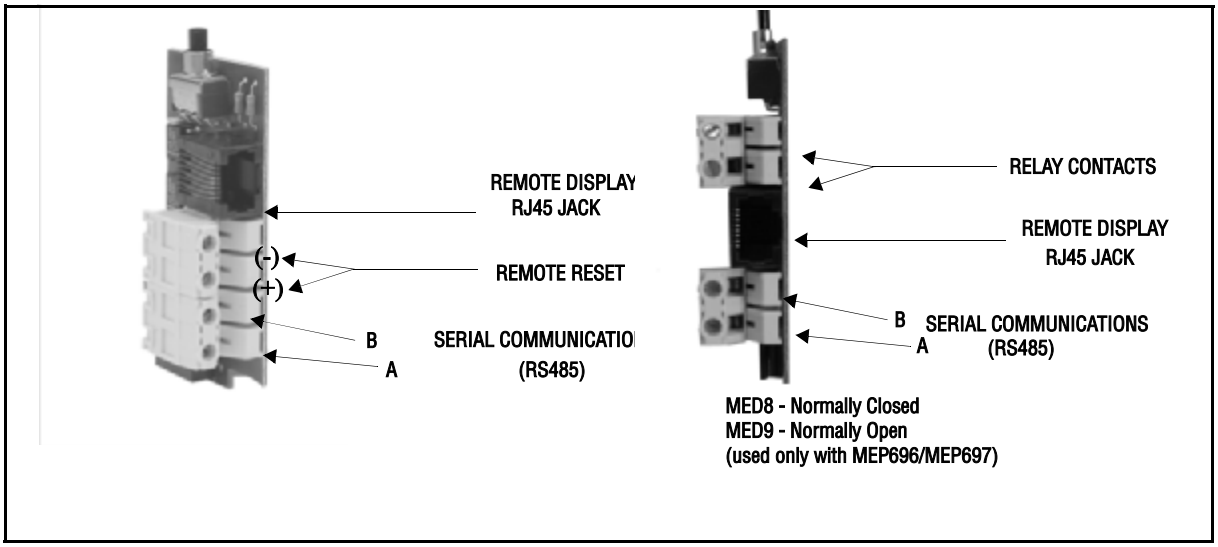

CAUTION: Remote reset is recommended only on a control solely for proved ignition programming (pilot ignited burner) or a control for use only with applications in which unburned fuel cannot accumulate and that is intended for installation in inaccessible locations such as open-flame, ceiling-suspended gas heaters. The remote reset location must be within sight and sound of the fired equipment.

ADVANCED RESET FUNCTIONS

Multiple functions have been integrated into the reset push button located on the MicroM and provided by way of the remote reset terminals. Among these are reset/recycle, reset from lockout only, recycle only and set unit address. **The functions of the switch is determined by the length of time the push button is depressed and released.**

The MicroM allows the connection of the remote resets to be connected together, usually in a multi-burner system where multiple MicroM's are mounted in a common panel. The reset push button located on the MicroM daughter board is in parallel with the remote reset terminals when provided by the other MED daughter boards.

Normal Operation

If the push button is depressed and released for greater than 1/2 second but less than 3 seconds, the MicroM will either reset if in lockout, or shutdown and revert back to the start of the cycle. If the MicroM is in the Idle state, this action will cause the LED's to sequence from the bottom to top and serves as a LED test.

Smart Reset

If the push button is depressed and released greater than 3 seconds but less than 5 seconds, the

MicroM will reset from the lockout state only. This is especially useful where, through the use of remote reset daughter boards, all reset inputs can be connected together to a common reset pushbutton or intelligent device (PLC). If the push button is depressed as described above it will only cause the unit that is in lockout to reset and not effect any other units.

Smart Recycle

If the push button is depressed and released greater than 5 seconds but less than 7 seconds, all connected MicroM units will recycle back to the beginning of purge. All units that are in lockout will remain in lockout.

Address Mode

If the unit is in the Idle or Standby mode and the push button is depressed and released for greater than 10 seconds, the unit address of the MicroM will be displayed on the LED's in a binary format. The range of the address is 0 to 31 and is used for Modbus or E500 communications. Because the default address is 0 and since address 0 would mean no LED's would be lit; the ALARM LED is made to flash when the address is 0. The OP CTRL LED is the least significant bit while the FLAME relay is the most significant bit. The ALARM LED is used to indicate if the address is greater than or less than 16. If the ALARM LED is flashing, the address is less than 16 and conversely if the ALARM LED is solid, the unit address is greater than 16. This only applies to the address. To increment the address on the control, depress and release the RESET push button and observe the LED pattern. If the RESET switch is untouched for 30 seconds, the current address displayed will be stored to memory and the MicroM will automatically exit the address mode.

	LED	BINARY VALVE
OP CNTRL	❍	1
INTRLCK	❍	2
PTFI	❍	4
FLAME	❍	8
ALARM	❍	16
The ALARM LED flashes for addresses less than 16.		
The ALARM LED is solid for addresses greater than 15.		

REMOTE DISPLAY

The MicroM provides an interface to the optional ED510 display module. The ED510 connects to the MicroM through the plug-in board using a ED580 cable. The ED580 cable is available in 2, 4, or 8 foot lengths. Part number 129-145 -1 (4 ft.), -2 (8 ft.), -3 (2 ft.) is available for remote mounting the ED510 Display Module and to provide NEMA 4 protection.

The ED510 Display Module is a backlit, 2 line by 16 character LCD display with keypad to provide both current operation and historical information of the MicroM. The ED510 contains a keypad consisting of three push keys, SCRL, RESET and MODE. Remote reset is available through the ED510 Keypad.

The ED510 displays current burner status, first out annunciation in the event of a lockout condition, historical burner information, detailed lockout information of the last six (6) lockout conditions and programmer configuration information. Through the display the ability to program the unit address for communications, as well as resetting the stored information (cycles, hours, and lockouts) to zero is provided.

Depending on the information being displayed, data is displayed on the ED510 screen in the following locations:

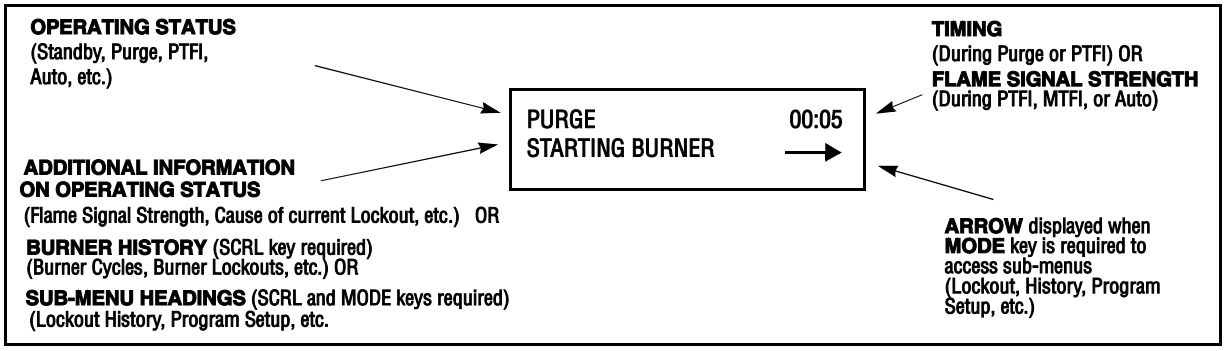

At any time the MicroM is powered, the SCRL key is used to scroll through and display the total number burner hours, burner cycles, burner lockouts and system hours on the bottom line of the ED510 display. The top line will continue to show the current run mode of the control (e.g. PURGE, AUTO, etc.) Following the historical information, the SCRL key will display three (3) sub-menus providing the following information and/or functions:

- Lockout History (with burner cycle and burner hour time stamp).
- Program Setup (to display programmer type, purge timing, switch configuration, etc.)
- System Information (values of average pilot and main flame signal, and reset burner history).

The system sub-menus require the MODE key to gain access to the information associated with each sub-menu. An arrow is displayed in the lower right hand corner of the display to indicate a system sub-menu is available. Once within the sub-menu, pressing the SCRL key displays the next item within the sub-menu, and pressing the MODE key will exit the sub-menu and return the display to the top of the main menu.

AUTO 40 BNR HOURS 673	Number of burner operating hours. (Terminal #5 energized).
AUTO 40 BNR CYCLES 2784	Number of burner cycles.
AUTO 40 BNR LOCKOUTS 21	Number of burner lockouts.
AUTO 40 SYS HOURS 1386	Number of hours the control has been powered.
AUTO 40 LOCKOUT HISTORY →	Sub-menu to display the cause of the last 6 lockouts. The MODE key is required to display the actual lockouts.
AUTO 40 PROGRAM SETUP →	Sub-menu to display various operating parameters of the programmer and amplifier. The MODE key is required to enter the sub-menu.
AUTO 40 SYSTEM INFO →	Sub-menu to display information pertaining to the operation of the control. The MODE key is required to enter the sub-menu

LOCKOUT HISTORY

The sub-menu "LOCKOUT HISTORY" will display the last six (6) lockouts, along with the burner cycle and burner hour when the lockout occurred. When the MODE key is pressed, the screen will display the most recent lockout condition and the number of that lockout (e.g. LO #127 represents the 127th lockout of that control). The SCRL key will display the Burner Hour, followed by the Burner Cycle when the lockout occurred. The SCRL key will advance to the next lockout, and repeat the sequence listed above. The MODE key will exit the sub-menu.

PRESS	SCREEN DISPLAYS	DESCRIPTION
SCRL	AUTO 45 LOCKOUT HISTORY	Scrolling through the historical information.
MODE	LO #127 PTFI FLAME FAIL	The latest (most recent) lockout condition. This is the 127th lockout of the control. History indicates the lockout occurred during PTFI.
SCRL	LO #127 PTFI @ BNR HOURS 136	The last lockout occurred after 136 hours of burner operation.
SCRL	LO #127 PTFI @ BNR CYCLE 744	The last lockout occurred at burner cycle 744.
SCRL	LO #126 PURGE AIR FLOW OPEN	The second latest lockout condition. This is the 126th lockout of the control. History indicates the lockout occurred during purge.
MODE	AUTO 45 FLAME SIGNAL	Screen has returned to the normal run message.

PROGRAM SETUP

The sub-menu "PROGRAM SETUP" allows the user to review the various operational settings of the programmer module (e.g. programmer type, purge timing, etc.). The MODE key is used to enter the "PROGRAM SETUP" sub-menu, and the SCRL key is used to advance through the sub-menu.

MODE	AUTO 45 PROGRAMR MEP230	Programmer Type is an MEP230.
SCRL	AUTO 45 ENGR CODE NO. 5	Software Engineering code of the programmer module is code 5.
SCRL	AUTO 45 AMP. TYPE= MEUV	Amplifier module is an EUV1 or an ERT1.
SCRL	AUTO 45 FLAME FAIL TIME = 3s	Flame Failure Response Time (FFRT) is 3 seconds.
SCRL	AUTO 45 PURGE TIME = 7s	Purge timing (selected by the dipswitches) is 7 seconds.
SCRL	AUTO 45 PROVE 7-6 OPEN = N	Prove 7-6 open to start is disabled (selected by dipswitches).
SCRL	AUTO 45 POST PURGE = 0s	Post purge time is 0 seconds (selected by dipswitches).
SCRL	AUTO 45 TYPE RECYCLE	Control recycles on flame fail (selected by dipswitches).
SCRL	AUTO	Unit Address is 00. Refer to section on communications.

	UNIT ADDRESS 00		
SCRL	PRESS RESET TO ACCEPT SETTINGS		Force storage of dipswitch settings before 8 hours time-out.
MODE	AUTO	45	Mode key returns to normal run message.

SYSTEM INFO

The sub-menu "SYSTEM INFO" allows the user to review information pertaining to the operation of the control (e.g. average main flame signal strength, status of the high fire and low fire end switches, etc.). The MODE key is used to enter the "SYSTEM INFO" sub-menu, and the SCRL key is used to advance.

Press	Screen Displays		Description
SCRL	AUTO SYSTEM INFO >	45	SCRL key advances through the historical information until "System Info" is displayed. Pressing and releasing the MODE Key enters the sub-menu.
MODE	AUTO AVG. PILOT FLM 22	45	The average flame signal strength of the pilot flame = 22
SCRL	AUTO AVG. MAIN FLM 40	45	The average flame signal strength of the main flame = 40.
SCRL	PRESS RESET TO CLEAR HISTORY		Historical data will be cleared to 0. Must be done while terminal I-7 is open.
MODE	AUTO FLAME SIGNAL	45	Mode key returns to run message.

COMMUNICATIONS

The protocol to be used is Modbus RTU. This is implemented by the master (PC, PLC, etc.) issuing a poll to the slave (MicroM) and the slave responding with the appropriate message.

A typical format of a poll request is as follows:

DST	FNC	ADR HI	ADR LO	DAT HI	DAT LO	CRC LO	CRC HI

DST refers to the logical address of the slave set but using reset pushbutton or ED510.

FNC is the function being requested. FNC 03 is a read request.

ADR is the message number or register number of the data being requested. In Modbus, register addresses begin at 40001 but is interpreted as address 00.

DAT is the number of words being requested. A word is an integer consisting of 2 bytes.

The normal response from a slave is as follows:

DST	FNC	DBC	DATA.... Hi/Lo	CRC LO	CRC HI

DBC is the data byte count being returned. It must be two times the DAT number from the poll request.

DATA is the data returned and is always a series of 2 byte integers. If 4 words were requested then DBC would be 8 and there would be 8 data bytes or 4 data words containing the requested data.

The format of the data is 4800, N, 8, 1 meaning 4800 baud, no parity, and 1 stop bit.

Below is a table of currently available messages provided by the MicroM programmers, followed by a description where necessary.

MESSAGE ADDRESS	WORDS REQUESTED	RESPONSE	VALUE
00	1-6	STATUS	83 (053H) = RUN; 202 (0CAH) = LOCKOUT
01	1	MSGN	Current message being displayed (see Table 3)
02	1	GSTAT	Defines Timer Type
03	1	TIMER	Time, Flame, Address
04	1	FLAME	Flame Signal
05	1-3	LOGSTAT	Current logic module, PURGE, PTFI, AUTO (See Table 1)
06	1	INPUTS	Input limits state
07	1	OUTPUTS	Output relays state
08	2, 4 or 8	SYSMINS	System on minutes
10	2 or 4	BNRMINS	Burner on minutes
12	2	CYCLES	Completed Burner Cycles
14	1	LOCKOUT COUNT	Stored Lockout Count
15	1-6	LOCKOUT HISTORY	Last 6 Lockouts, first word is most current lockout
21	1-2	DEVTYP	Programmer device type, 5=EP, 6=EPD, 7=MicroM
22	1	AMPTYP	Amplifier Type; MECD=080H; MEUV=090H; MEIR=0A0H; MERT=0B0H; MEUVS=0C0H
23	1	PROGTYP	Programmer Type (See Table 2)
24	2	FLAME SIGNAL AVERAGES	PTFI and Auto Flame Signal Averages
26	1-9	Combined Status	See Description Below
35	6	Most Recent Lockout Data	Returns complete lockout description of stored lockout history. Includes lockout message, lockout module, @ burner hours, and @ burner cycles
41	6	2nd Most Recent Lockout Data	
47	6	3rd Most Recent Lockout Data	
53	6	4th Most Recent Lockout Data	
59	6	5th Most Recent Lockout Data	
65	6	6th Most Recent Lockout Data	

Messages 00, 05, 08, 10, 15, 21 and 26 are unique in that a limited number of successive registers can be combined with these requests. For example, a request to message 00 can contain up to 6 data words. The response to this would contain STATUS, MSGN, GSTAT, TIMER, FLAME and LOGSTAT. If the requested data word count (DAT) were to be 2 then the response would contain STATUS and MSGN only. Message 15, last 6 lockouts, can return data ranging from 1 to 6, with 1 referring to the most recent lockout.

Message 26 returns the current operating status as well as stored burner hours and burner cycles as a snapshot of the entire MicroM system. When all 9 words are requested, the data returned consists of STATUS, MSGN, FLAME, INPUTS, OUTPUTS, BNRMINS, and BNRCYCS.

The MSGN being transmitted is a numerical value and must be interpreted by the communicating device, which actually is an advantage since this can be made to be whatever message text the end user wants. In other words, it allows for programming custom messages without actually changing the message in the programmer.

The MicroM stores its burner on time (Terminal 5 powered) and system on time (L1 powered) in minutes. Internally, the programmer converts this to hours for display purposes, however the result is rounded down. The information being supplied by Modbus will be the actual time in minutes and it is up to the communicating device to do the conversion. Since the maximum value stored in the MicroM is 9,999,999 minutes, the maximum value in hex therefore, is 98967FH and comprises of two data words. The maximum cycle count is 999,999 decimal or 0F423FH, still two data words. As an example, the System on Minutes data is transmitted from the MicroM to the interface as high word / low word as shown below:

MESSAGE ADDRESS 8		**MESSAGE ADDRESS 9**	
HIGH WORD		LOW WORD	
HIGH BYTE	LOW BYTE	HIGH BYTE	LOW BYTE
0	98H	96H	7FH

Note: Data from address 9 cannot be accessed directly.

All values are represented in a HEX or base 16 format.

GSTAT determines the type of value TIMER represents. TIMER can be a running timer such as is used in purge, a flame signal or meaningless. Only the lower nibble of GSTAT has any value. If this value is 0 then the TIMER value has no meaning. The value in TIMER is a background minute timer in the MicroM and should be ignored. If GSTAT is between 4 and 7, the TIMER represents the current value flame signal. If GSTAT is a 1, 2, or 3 then TIMER represents a running timer value.

The baud rate of the MicroM is fixed at 4800 bits per second. The format of the data is 8 data bits, no parity and 1 stop bit. Due to the RS485 format, the communication format is considered half-duplex. That is, only one user is permitted on the communication lines at a time.

The information contained in INPUTS and OUTPUTS represents the status of the interlocks and relays respectively. For the INPUTS, a 1 in the interlock position defines the interlock as being on or energize where the 1 in any bit position in the OUTPUT register signifies the relay as being energized.

INPUTS

			Term 5	Term 3	Term 6	Term 7	
Reset	Scrl	Mode	RF	Pilot	Intrlck	OpCntrl	Ref

Reset, Scrl and Mode represent the keypad located on the ED510 display. A ‘0’ in any of these positions indicates the switch is depressed. A ‘1’ in the opto-coupler position indicates the opto-coupler is on or interlock closed.

OUTPUTS

			Term 8	Term A	Term 3	Term 5	Term 4
N/A	N/A	N/A	Blower	Alarm	Pilot	Main Fuel	MTFI

A ‘1’ in any terminal position indicates the relay is energized. Term 4 indicates the state of K1 relay, located in the MEP500 series programmers.

It is suggested that repeated polling interval not be less than 200 mSec per request. Requesting data such as burner minutes, system minutes and burner cycles be kept at a minimum due to the amount of processing time required to gather that data.

Table 1: Logic Dispatch

LOGIC DISPATCHER		
VALUE		MicroM
HEX	DEC	
45H	69	MPOSTIDLE
46H	70	MPREPURGE1
47H	71	MPURGE
48H	72	MTFI
49H	73	MSTABLE
4AH	74	MTFMF
4BH	75	MAUTO
4CH	76	MSHTDWN1
4DH	77	MSHTDWN2
4EH	78	MIDLE

Logstat represents the current software module the Flame-Monitor is currently executing. They are named as close to the logic module the actual burner sequence is in. For instance, in the Flame-Monitor, MPURGE represents High Fire Purge where MPOSTPURGE represents low fire start purge. MSHUTDWN1 represents the post purge period after a complete cycle or the cool down period after a lockout.

MIDLE or STANDBY is the period of time where the operating control is open or the control is in lockout waiting for reset. On instances of false flame during the purge period, the control algorithm forces the control back to STANDBY until false flame ceases or lockout occurs.

MPREPURGE1 is the period of time prior to PURGE where the control checks the status of the air flow interlocks or in the case of the Flame-Monitor, high fire proving switch (D-8). If found open, the control will remain in this state until the respective switch closes or lockout occurs.

MTFI represents the pilot ignition stage of a burner sequence. MTFMF represents the main trial for ignition period where main fuel is introduced along with pilot.

MAUTO is the run period of the burner sequence.

MPOSTIDLE and MSHTDWN2 are small periods of time where certain internal tests are conducted and general cleanup before and after a cycle is performed.

PROGTYP is represented by 1 data word. The upper byte identifies the family and the lower byte represents the programmer type within the family. The data represented by PROGTYP can be used to guard against the wrong programmer being installed in a system.

Table 2: Program Module Identification

Programmer Module	Identifier
MEP100	0H, 01H
MEP101	0H, 02H
MEP102	0H, 03H
MEP103	0H, 04H
MEP100P	0H, 05H
MEP109	0H, 06H
MEP130	0H, 08H
MEP104	0H, 09H
MEP105	0H, 0AH
MEP106	0H, 0BH
MEP107	0H, 0CH
MEP108	0H, 0DH
MEP230	1H, 01H
MEP230H	1H, 02H
MEP235	1H, 04H
MEP236	1H, 05H
MEP290	1H, 06H
MEP238	1H, 09H
MEP237	1H, 0AH
MEP560	2H, 01H
MEP561	2H, 02H
MEP562	2H, 03H
MEP536	2H, 04H
MEP537	2H, 05H
MEP300	0H, 01H
MEP304	0H, 09H
MEP397	0H, 0DH

Table 3: Message Description

DEC	HEX	MicroM Message
1	1	L1-7 OPEN
2	2	FALSE FLAME
3	3	STARTING BURNER
4	4	
5	5	INTRLCK OPEN
6	6	LOCKOUT LINE FREQUENCY NOISE DETECTED
7	7	LOCKOUT FLAME FAIL - PTFI
8	8	UNIT ADDRESS
9	9	MTFI
10	0AH	IGNITION TIMING
11	0BH	
12	0CH	FLAME SIGNAL
13	0DH	CYCLE COMPLETE
14	0EH	OFF
16	10H	LOCKOUT AMPLIFIER HIGH COUNT FAIL
19	13H	LOCKOUT FLAME FAIL – MTFI
20	14H	LOCKOUT FALSE FLAME – STANDBY
21	15H	LOCKOUT INTRLCK OPEN
22	16H	LOCKOUT INTRLCK CLOSED
23	17H	INTRLCK CLOSED (PROVING AIR FLOW OPEN AT START)
24	18H	LOCKOUT OPTO FAILURE
30	1EH	FALSE FLAME
37	25H	LOCKOUT FLAME FAIL - AUTO
39	27H	FUEL VALVE STATE CHANGE
40	28H	AIR FLOW CLOSED
49	31H	LOCKOUT FLAME FAIL - PTFI
54	36H	LOCKOUT CHECK CHASSIS
55	37H	LOCKOUT CHECK PROGRAMMER
56	38H	LOCKOUT CHECK AMPLIFIER
58	3AH	LOCKOUT AMPLIFIER AUTO CHECK FAIL
59	3BH	LOCKOUT CHECK BLOWN FUSE
76	4CH	LOCKOUT CHECK SCANNER

Addressing Modes

For communication in a multi-burner or multi-control environment, each MicroM must have a unique address. The range of address allowed within the MicroM is 0 to 31 allowing for a possible 32 units to be connected in a single multi-drop node. As shipped the default address is 0. The address of the MicroM may be set using two methods. Using the ED510 display, it is necessary is SCRL to the PROGRAM SETUP menu and enter that submenu with the MODE key. SCRL down until the display indicates UNIT ADDRESS with the actual address of the MicroM being displayed on the top

line of the display. Pressing and releasing the RESET key will cause the address to increment. The address after 31 is 0. The second method is to use the local reset located on the plug-in board. It is first necessary to open the operating control (L1-7) to have the MicroM in the IDLE or STANDBY position. Depressing the reset switch for greater than 10 seconds will cause the address of the MicroM to be displayed in a binary format on the LEDs located on the programmer board. Because the default is address 0, and since address 0 would mean no LEDs would be lit; the ALARM LED is made to flash when the address is 0. The OP CTRL LED is the least significant bit while the ALARM relay is the most significant bit. To increment the address counter, depress and release the RESET push button and observe the LED pattern. If the RESET switch is untouched for 30 seconds the current address displayed will be stored to memory and the MicroM will automatically exit the address mode.

TEST JACK VOLTAGE

For all amplifiers, the MicroM provides a uniform 0-10 volt signal to represent the flame signal strength. A signal reading greater than 4 volts is considered sufficient to provide reliable operation. This same signal is also available in a numerical format on the ED510 display. The chart below correlates the test jack voltage to the numerical value. The signal clamps at 10 volts at a numerical value greater than 42 and the numerical value clamps at 80.

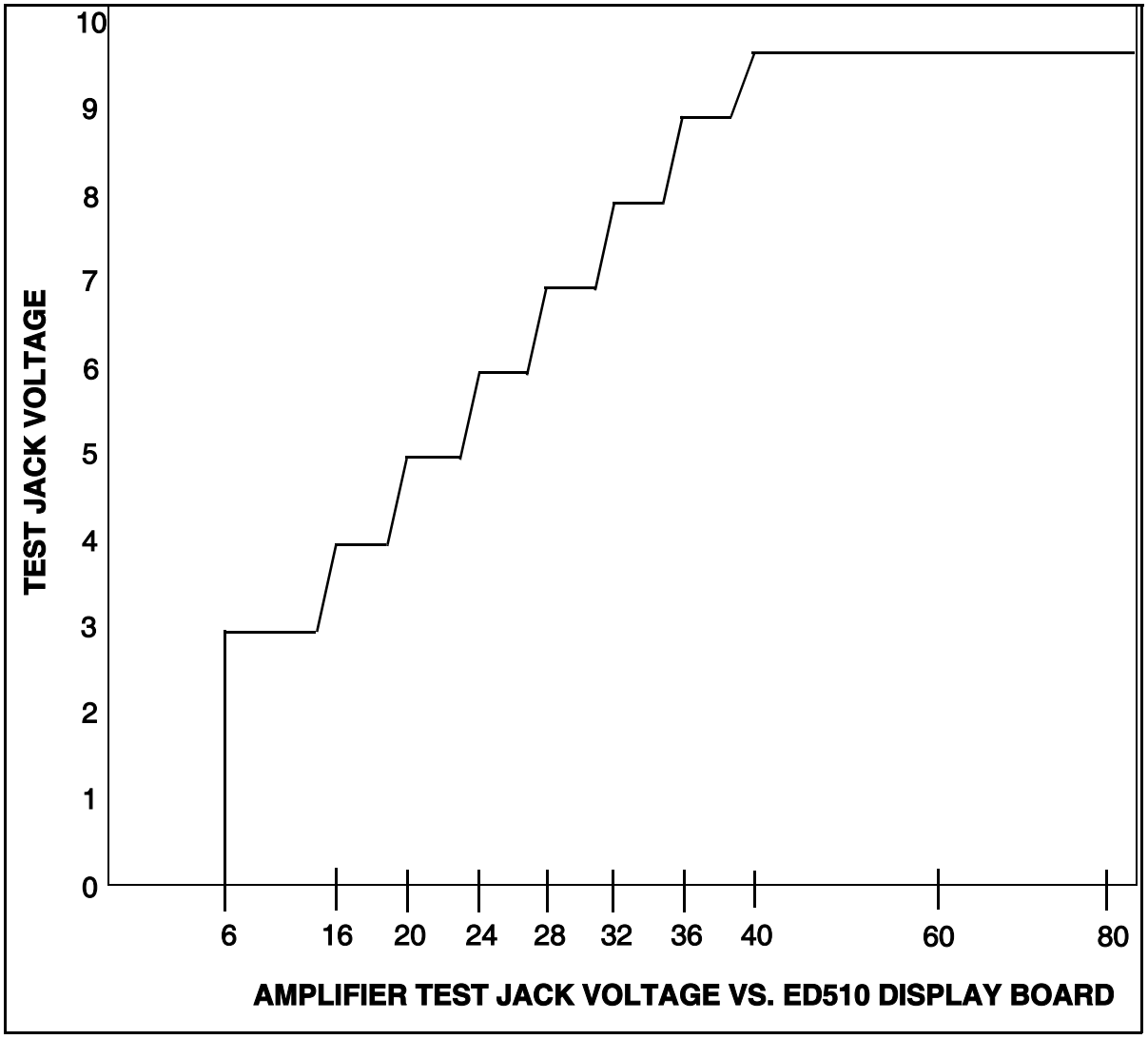

EXTERNAL METER CONNECTIONS

The test jacks are located on the amplifier card. If external access is desired for a panel meter the shown below will assist you in locating the position to drill through on the front cover. The hole sizes should be large enough to accommodate the body of the meter probes. The tests accept meter probes up to .080" or 2mm diameter.

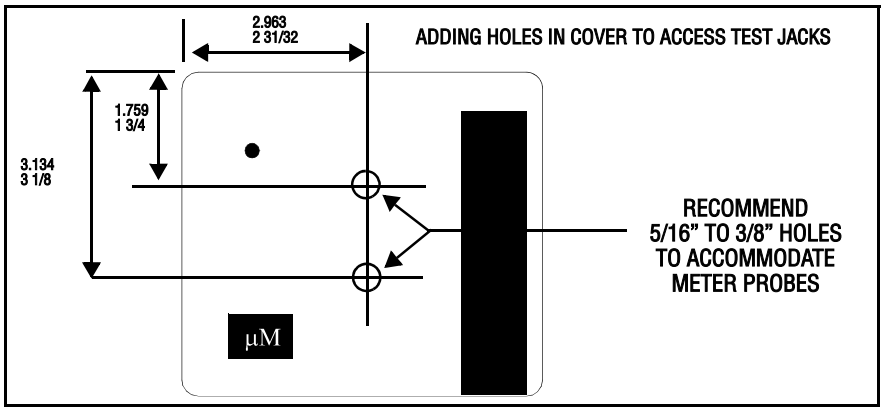

INSTALLATION TESTING

Use of Test Meter (All Controls)

Testing the Fireye MicroM Controls requires the use of a test AC/DC multimeter, with a minimum 1000 ohm/volt AC scale and 20,000 ohm/volt DC scale.

With the test meter on the DC scale, and the test meter leads inserted into the test jacks on the amplifier (Red for positive (+) polarity, Black for minus (-) polarity), a DC voltage reading of 4.0 to 10 volts for all amplifier types should be obtained when the control is detecting flame and 0 volts when no flame is present. Wildly fluctuating readings are an indication of an unstable flame or flame sensor requiring maintenance. Inadequate flame signal may be improved by:

1. Assuring that the flame detector and wiring installations have followed the instructions beginning on page 46.
2. Assuring that the flame detector is clean and within the ambient temperature limits.
3. Assuring that the flame is sufficiently large to detect.
4. Assuring that the flame quality (fuel to air ratio, combustion air velocity) is satisfactory.
5. Trying a shorter sight pipe or increasing the sight pipe diameter. **(The burner manufacturer should be consulted before mechanical changes are made).**

When using a flame rectification amplifier, a micro-ammeter may be connected in series with the wire to Terminal S2. Normal flame will produce a meter reading between 4 and 10 micro-amps.

With the test meter on the AC scale, line and load voltages may be measured at the identified test points on the chassis.

WARNING: Before making a pilot flame test, manually shut off the fuel supply to the main burner.

Normal Pilot Flame Test (Programmers with Run/Check Switch)

1. At pilot trial for ignition (PTFI) place the Run/Check switch in the Check position.
2. During the pilot flame test and adjustment period, if flame is not detected within 30 seconds, the control will lock out and require manual reset to initiate another cycle.

3. Observe the pilot flame signal on the test meter or the ED510 display. If the flame signal is below 4.0 volts DC or a reading of 10 on a remote display, re-adjust the pilot flame or realign the flame detector.

WARNING: DO NOT TOUCH a flame rectification rod with power applied.

4. When using UV detection, a test is required to verify that UV radiation from the ignition spark is not being detected. To accomplish this, manually shut off both the pilot and main fuels. Initiate a normal start-up. Observe the test meter which should read no more than 1/2 volt DC. If higher levels are observed, realign the UV scanner, and/or shield the spark from the scanner's view.
5. Move the Run/Check switch to the Run position, check pilot flame response time by manually shutting off the pilot fuel and initiate a normal start-up. With no pilot flame present, the control will de-energize the pilot assembly at the end of the trial for ignition interval (selectable by dipswitch #4) and go into safety shutdown.

WARNING: The minimum pilot test must be accomplished by a trained and qualified burner technician.

Minimum Pilot Test

This test assures that the flame detector will not sense a pilot flame too small to light a the main flame reliably. It must be made on every new installation as well as following the repositioning or replacement of the flame detector. This procedure should not be used on a direct spark burner.

1. Manually shut off the fuel to the main burner.
2. Place the Run/Check switch in the Check position. (MEP500 Series Programmers only).
3. Connect a test meter to the test jacks on the Amplifier Module or observe the reading on the ED510 display.
4. Initiate a normal start-up.
5. Reduce the fuel to the pilot until the DC voltmeter reads 4.0 volts. This is the minimum pilot. For flame rectification the flame signal for minimum pilot varies depending on the application. See WARNING below.
6. Return the Run/Check switch to the Run position (MEP500 Series Programmers only).
7. Slowly turn on the main fuel and insure the main flame lights off promptly and normally.

WARNING: If light off is delayed, shut off the power to the installation. Realign the flame detector so a larger pilot flame is required before flame is detected. Repeat this test until the main flame lights reliably with minimum pilot.

Flame Failure Test

1. Temporarily connect spark ignition and pilot to Terminal #3.
2. Initiate a normal start-up.
3. Manually shut off all fuel and observe the loss of flame signal on the test meter.
4. If flame signal does not reduce to zero within the flame failure response time of the control (FFRT determined by the selection of the amplifier), verify the UV flame detector is not actuated by the ignition spark. If spark is detected, a metallic shield or relocation of the UV detector is required.

5. **IMPORTANT: When the test is completed, reconnect the spark ignition to Terminal #4.**

MicroM SERVICE GUIDE

SITUATION #1 NORMAL LOCKOUT

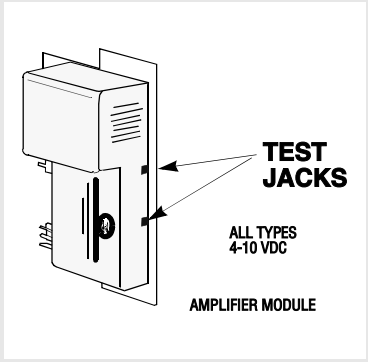

NO HEAT

O.C. ON

ALARM BLINKING

INSTALL DC VOLTMETER IN TEST JACKS

SHUT FUEL SUPPLY COCK

WAIT 5 MIN

RESET CONTROL

IS HEAT BEING CALLED FOR? — NO → MAKE IT CALL FOR HEAT

YES

DID OPERATE CONTROL LED COME ON? — NO → SEE SITUATION #2

YES

DID AIR FLOW LED COME ON? — NO → SEE SITUATION #3

YES

DID PTFI LED COME ON AFTER SUITABLE DELAY? — NO → PROGRAMMER OR MEC120 DEFECTIVE

YES

MP100 4-7 SECONDS

MP230 PREPURGE DELAY TIME

DID FLAME LED COME ON? — NO

PROPER PILOT VOLTAGE (120V) ACROSS 3, 2 — NO → CHECK FUSE IN CHASSIS — YES → CHECK OUTPUT WIRING

YES

PROPER IGNITION VOLTAGE (120V) ACROSS 4, 2 — NO → REPLACE MEC120 — YES → CHECK OUTPUT WIRING

YES

PROPER MAIN VALVE VOLTAGE (120V) ACROSS 5, 2 — NO → REPLACE MEC120 — YES → CHECK OUTPUT WIRING

YES

IS THERE A GOOD FIRE? — NO → MAKE PROPER BURNER ADJUSTMENT

YES

IS SCANNER POSITION OK? — NO → ALIGN SCANNER

YES

IS S1 S2 WIRING & TERM. CONTACT PRESSURE OK? — NO → REPAIR WIRING

YES

IS PROPER VOLTAGE ACROSS S1 & S2 — NO → AMPLIFIER OR MEC120 DEFECTIVE

YES → REPLACE SCANNER

DID FLAME LED COME ON? — YES

DID PTFI LED GO OFF AFTER SUITABLE DELAY? — NO → REPLACE PROGRAMMER

YES

IS SYSTEM RUNNING? — NO → REPEAT SITUATION #1

YES → RESET SUCCESSFUL

TO RESET THE CONTROL THE CONTROL POWER MUST BE ON. (L1-L2)

SITUATION #2

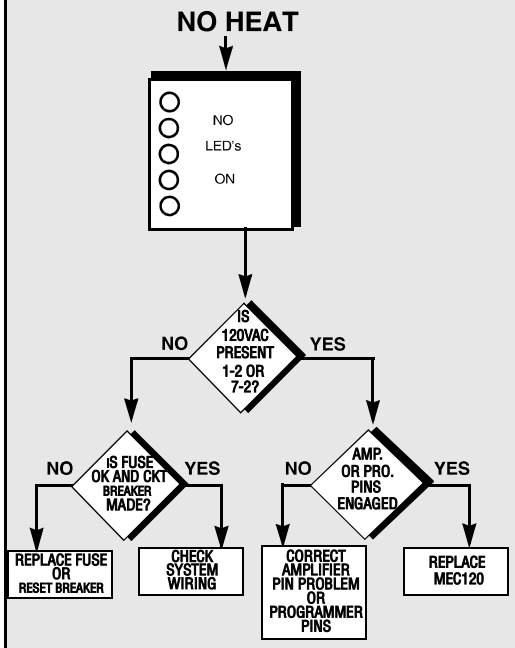

M-Series Fuse 2AG 8 amps.
Fireye Part Number: 23-176
or
Little Fuse Number: 225008

SITUATION #3

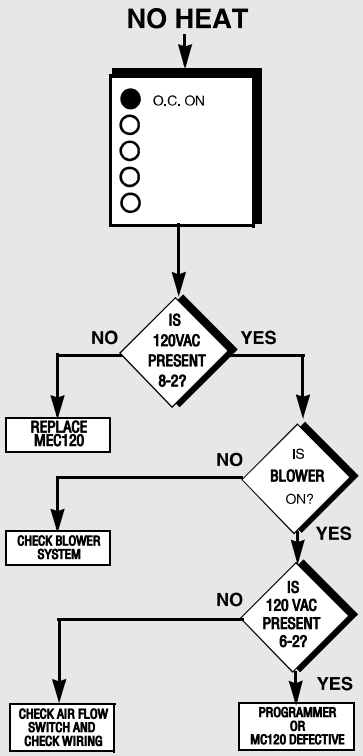

SITUATION #4

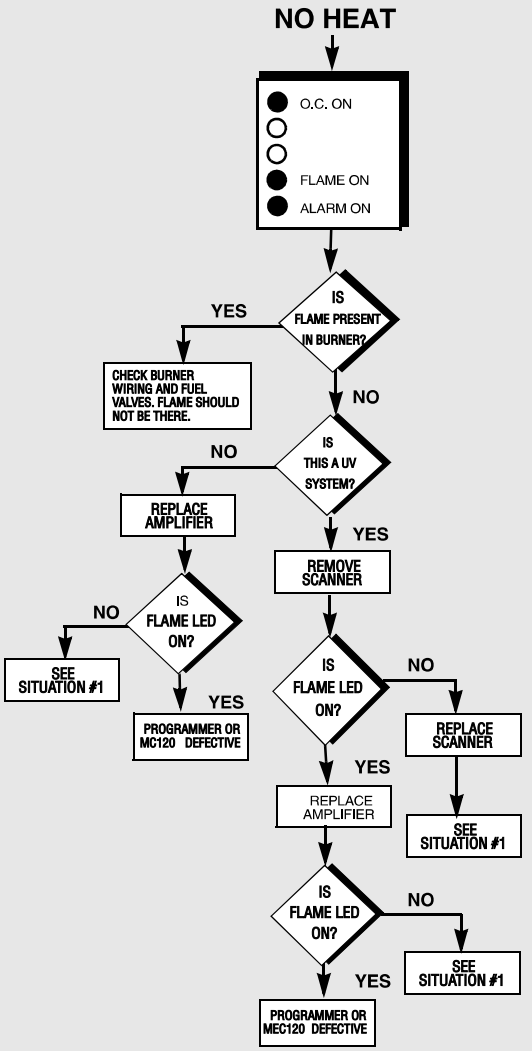

TROUBLESHOOTING TIPS

1. Verify that there is a solid earth ground wire brought to the panel that the Fireye base is mounted to.
2. In a rectification system, verify that terminal S1 is solidly earth grounded, and confirm that the flame rod is aligned so it doesn't droop near the ignition spark.
3. Confirm that there is no measurable voltage present between the ground screw and terminal 2 (neutral).
4. Confirm that the 120 volt AC supply has its neutral leg earth grounded at the supply, (floating isolation transformers can cause problems).
5. Confirm that the ignition transformer's secondary winding is solidly earth grounded. The grounding method is usually through the transformer case. Dirt, paint, loose mounting hardware, etc., can all be factors.
6. There may be a problem with transients in the main power supply. If you think this may be the problem, you may want to run a ground wire directly from the pilot assembly back to the electrical panel where the Fireye control is mounted.

Wiring Arrangements

IMPORTANT: Use moisture resistant wire rated 90°C minimum.

CAUTION: When powered, 560 VAC across S1, S2 with MEUV4, MEUV1, MEUVS4 and MEUVS1; 260 VAC across S1, S2 with MERT4 and MERT1.

CAUTION: Control wiring procedures which deviate from those shown in the diagrams may bypass safety functions designed in the control. Check with the Fireye Representative before deviating from the recommended wiring diagrams.

FIGURE 6. WIRING ARRANGEMENT FOR PILOT IGNITED BURNERS USING MEP100 AND MEP200 SERIES PROGRAMMERS

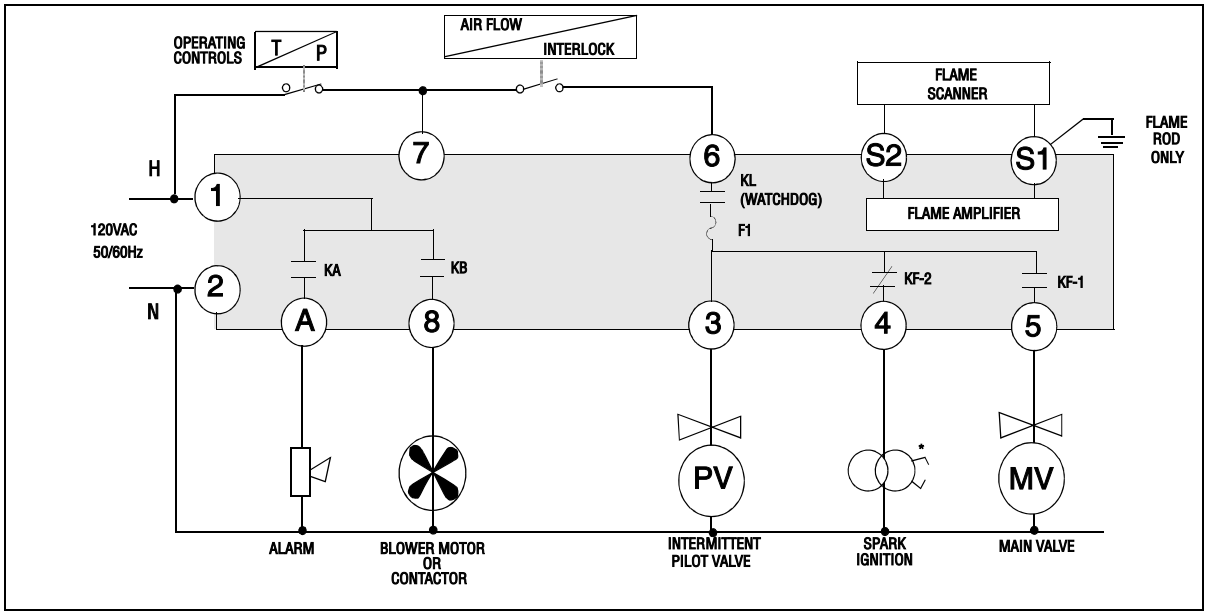

*For intermittent ignition, connect to terminal 3

FIGURE 7. WIRING ARRANGEMENT FOR PILOT IGNITED BURNERS AND PROVISION FOR MAIN FLAME STABILIZATION USING MEP236 SERIES PROGRAMMERS

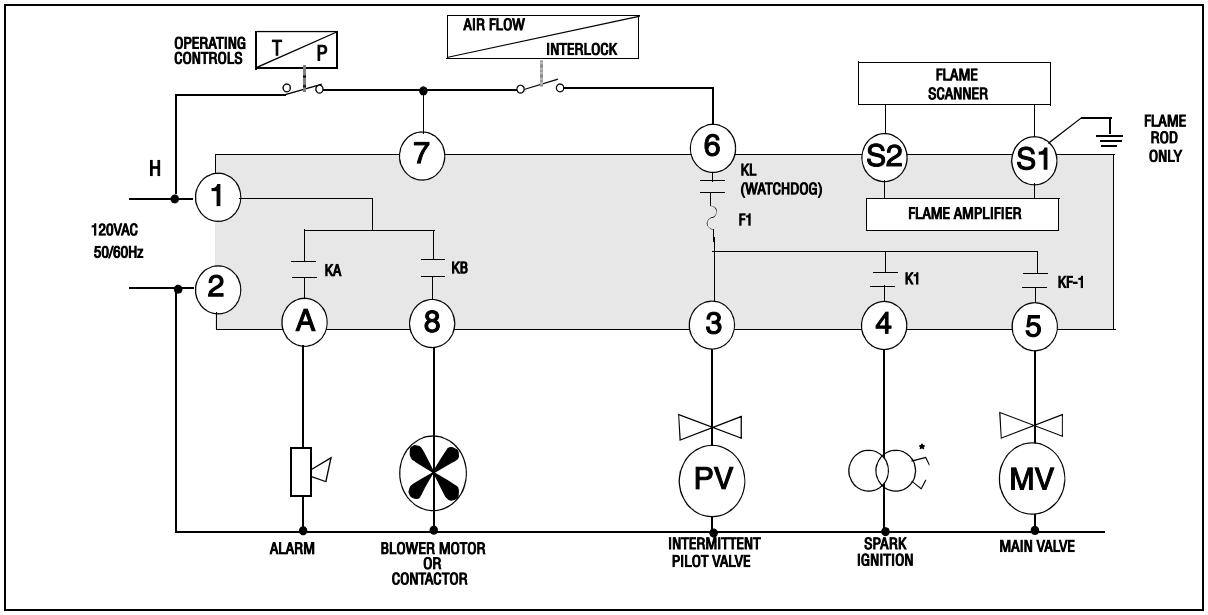

FIGURE 8. WIRING ARRANGEMENT FOR DIRECT SPARK IGNITED BURNERS, TWO STAGE OPERATION USING MEP100 AND MEP200 SERIES PROGRAMMERS

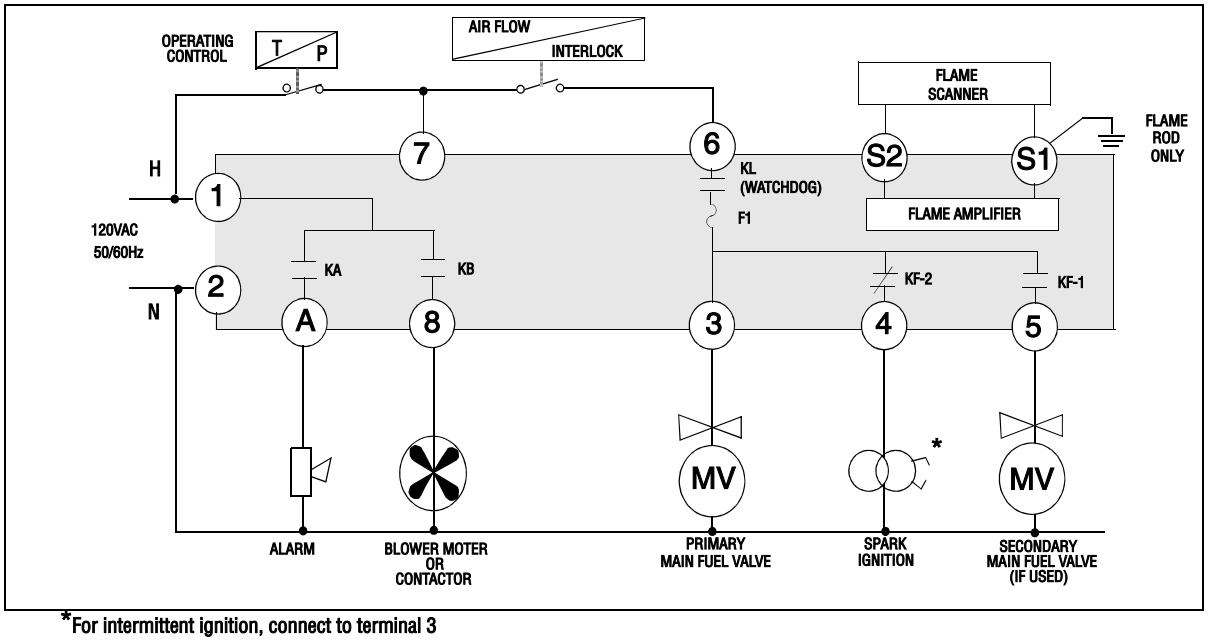

*For intermittent ignition, connect to terminal 3

FIGURE 9. WIRING ARRANGEMENT FOR PILOT IGNITED BURNERS AND INTERRUPTED PILOT USING MEP500 SERIES PROGRAMMERS

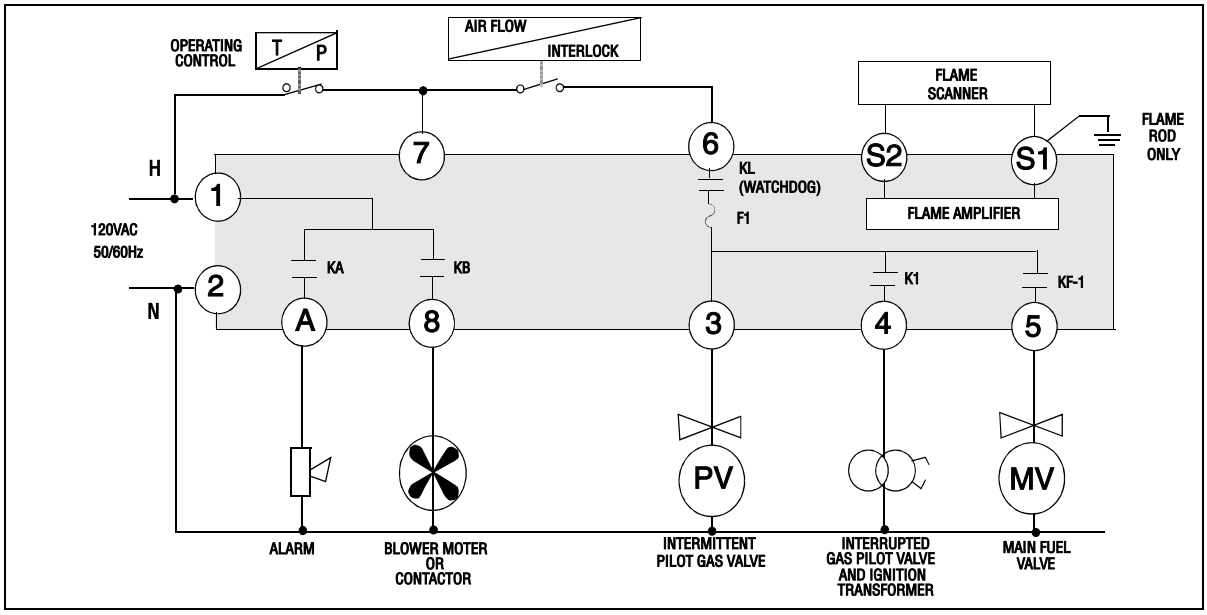

FIGURE 10. WIRING ARRANGEMENT FOR DIRECT SPARK IGNITED BURNERS AND INTERRUPTED IGNITION USING MEP500 SERIES PROGRAMMERS

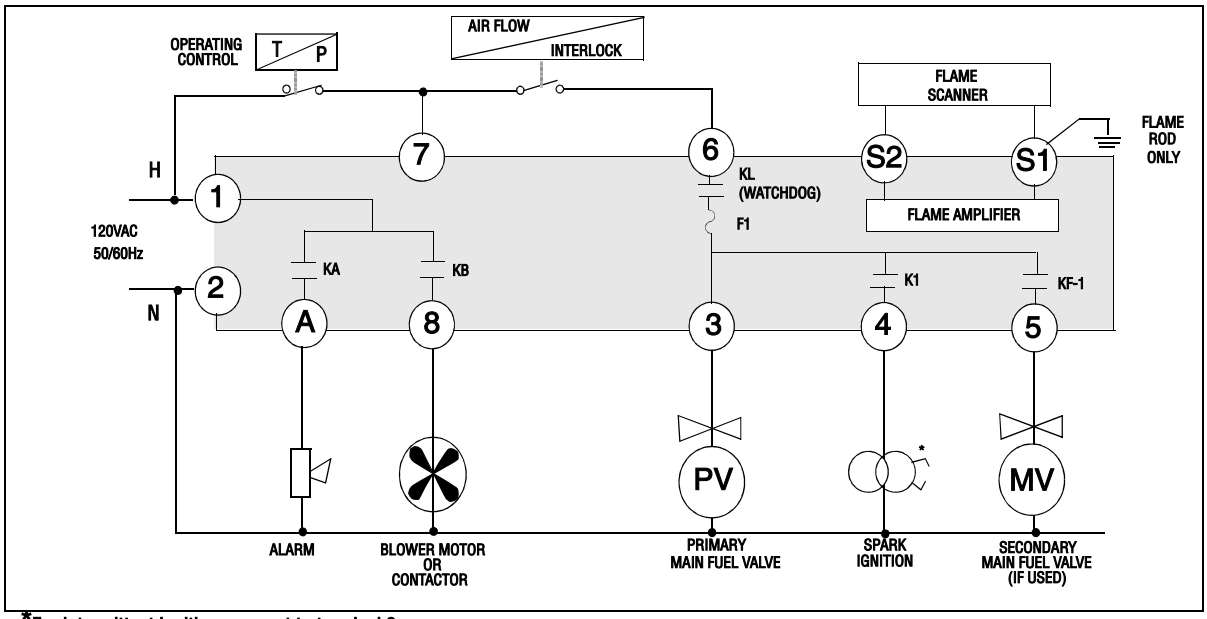

*For intermittent ignition, connect to terminal 3

FIGURE 11. WIRING ARRANGEMENT FOR FLAME SWITCHES USING MEP100 PROGRAMMERS

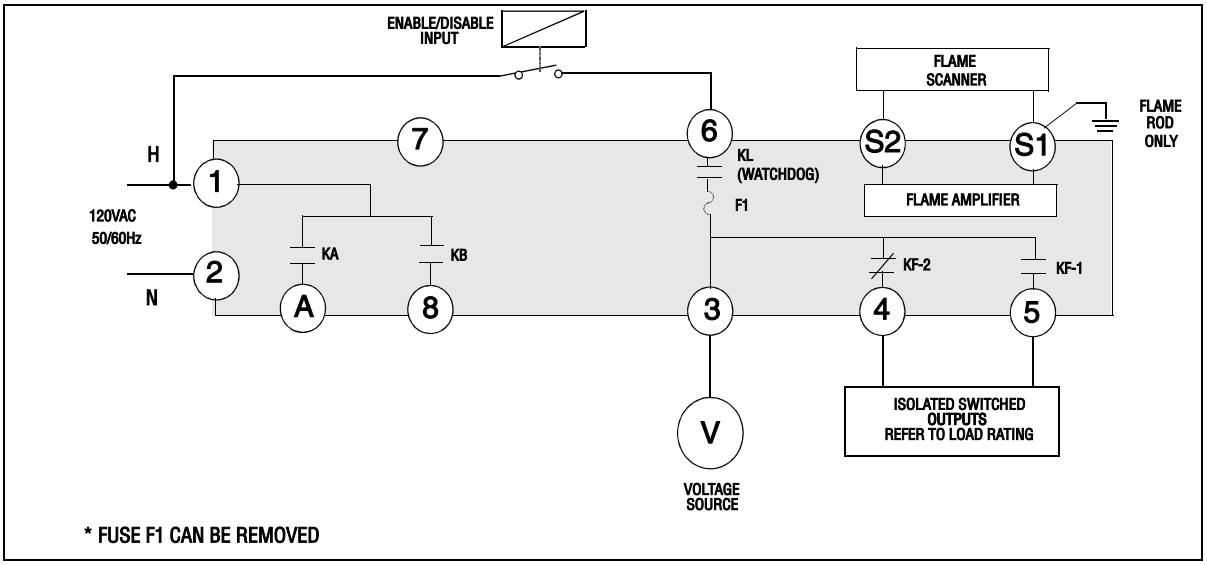

NOTE: Air Flow LED will blink while flame is detected and KF relay is energized.

FIGURE 12. WIRING ARRANGEMENT FOR PILOT IGNITED BURNERS USING MEP300, MEP400 AND MEP600 SERIES PROGRAMMERS.

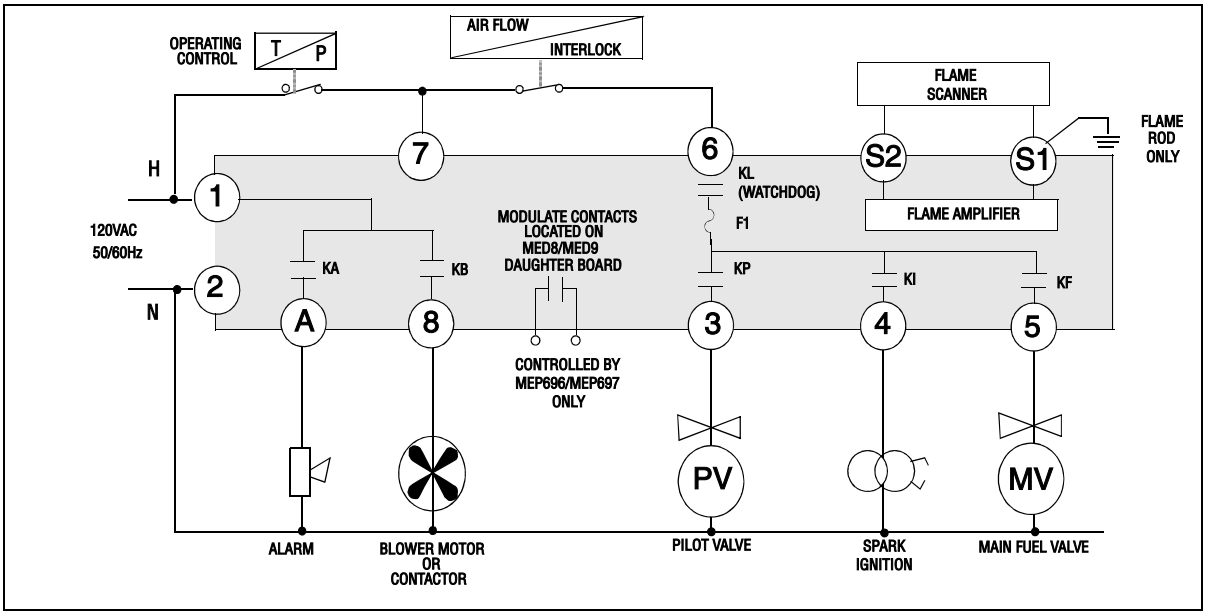

FIGURE 13. ALTERNATE WIRING ARRANGEMENT FOR MEP CONTROLS

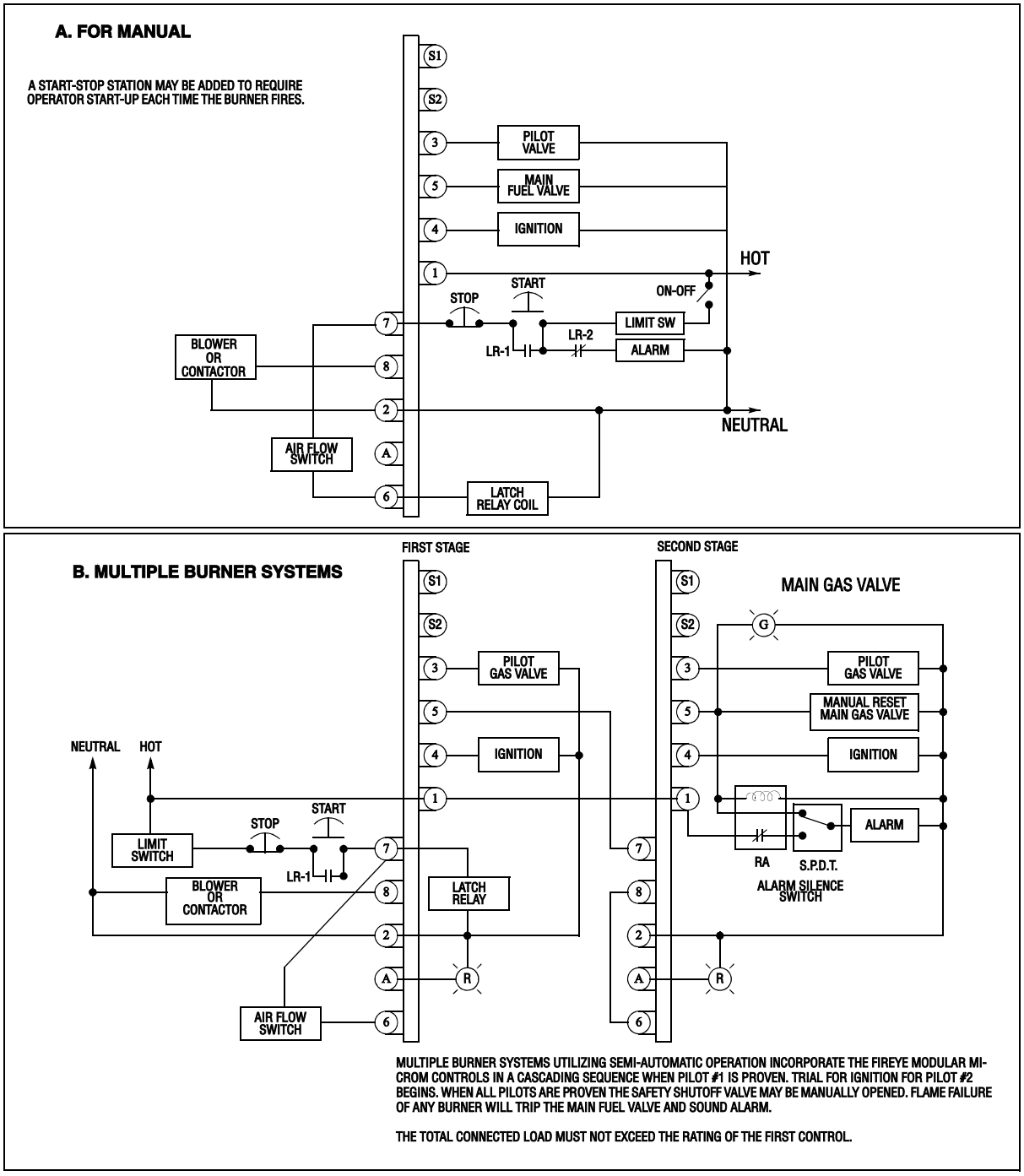

IMPORTANT: Use moisture resistant wire rated 90°C minimum.

FIGURE 14. BACKWARD COMPATIBLE WIRING USING MEP100 AND MEP200 SERIES PROGRAMMERS (PILOT IGNITED BURNERS).

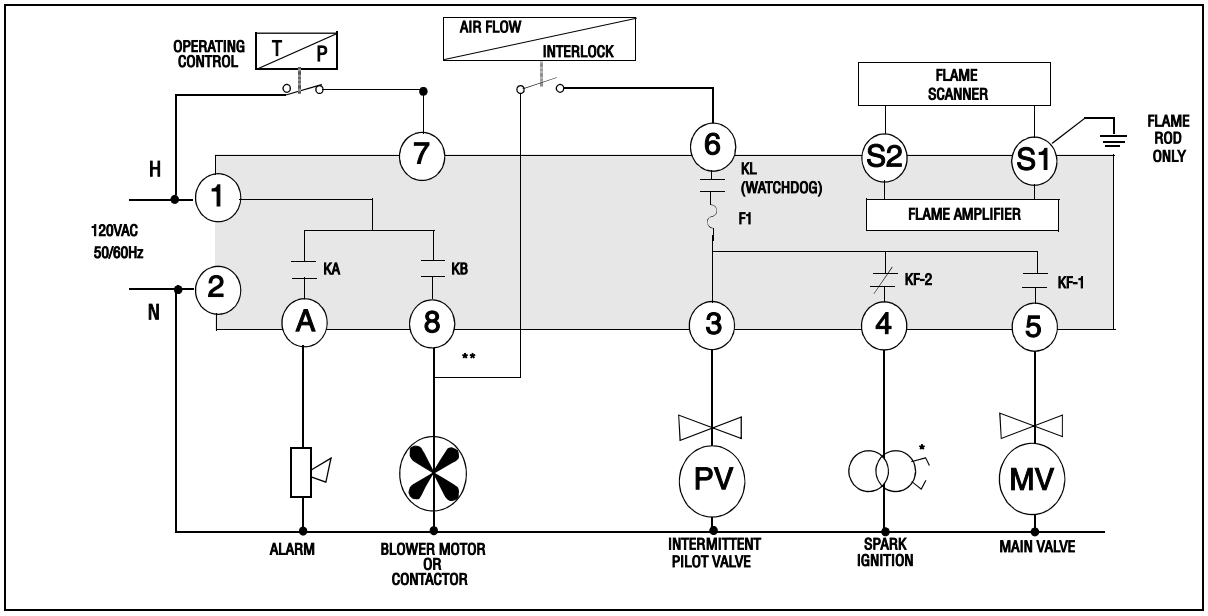

* For intermittent ignition, connect to terminal 3

** Combined current from Terminal 8 must not exceed 9.8 Amps

FIGURE 15. BACKWARD COMPATIBLE WIRING USING MEP500 SERIES PROGRAMMERS (PILOT IGNITED BURNERS)

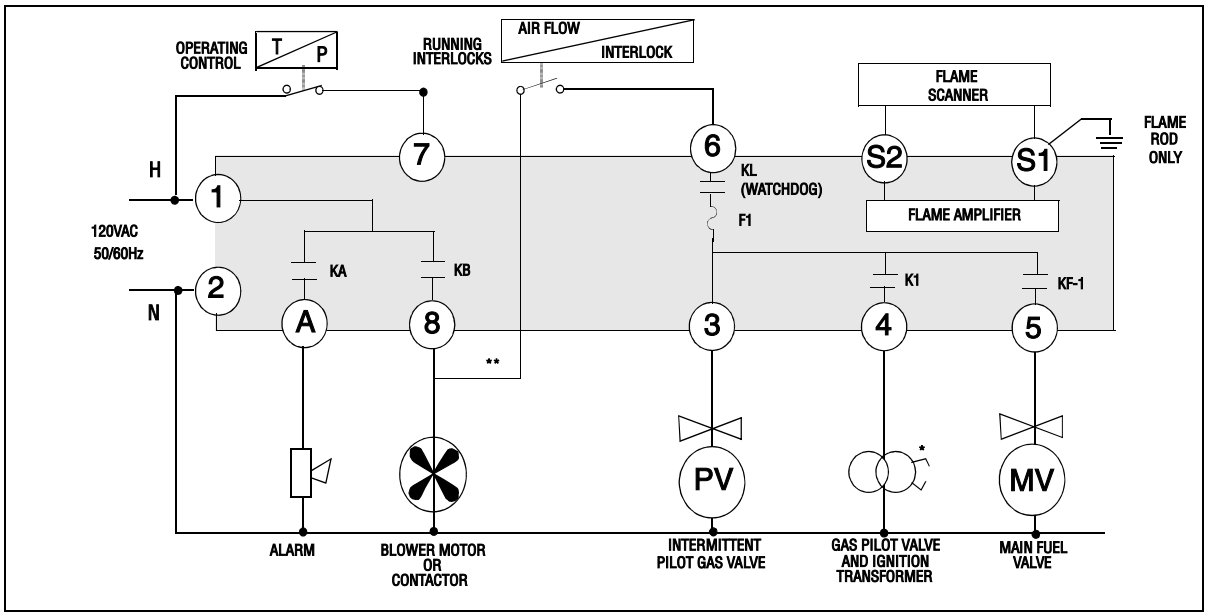

* For intermittent ignition, connect to terminal 3

** Combined current from Terminal 8 must not exceed 9.8 Amps

SUGGESTED GROUNDING RULES

The MicroM system, being microprocessor based, requires a ground system that provides a zero-voltage reference. The voltage measured from L2 to all other terminals except L1 should be 0 volts.

1. The most effective ground is to run the ground wire in the same raceway as the hot and neutral from the main distribution service panel (not intermediate sub-panels) to the burner control panel and insure that this ground wire is well bonded to the control panel.
2. The wiring base of the MicroM must have earth ground providing a connection between the sub-base and the control panel or the burner.
3. The earth ground wire must be capable of conducting the current to blow the 20A fuse in event of an internal short circuit. A number 14 AWG copper conductor is adequate, wide straps or brackets are preferred rather than lead wires.
4. The ground path needs to be low impedance (less than 1 ohm) to the equipment frame which in turn needs a low impedance to earth ground. For a ground path to be low impedance at RF frequencies, the connection must be made with minimum length conductors having maximum surface areas.
5. All connections should be free of nonconductive coatings and protected against rust.
6. Utilizing conduit as a means of providing a ground must be avoided.
7. Installing ground rods at the burner control panel defeats the purpose of a single point ground as described above and could also present a safety hazard.

INSTALLATION

Do not run high voltage ignition transformer wires in the same conduit with flame detection wiring.

Do not run scanner wires in a conduit with line voltage circuits.

Ensure the frame of the ignition transformer is securely connected to control panel frame or preferably the burner frame.

The MicroM chassis (MEC120) contains a transient suppressing device connected internally across hot and neutral and then to the internal bracket. For this to be effective the chassis must be screwed securely into the wiring subbase.

REMOTE DISPLAY

When the ED510 is to be remotely mounted on the front of the control panel, the ED580 cable must contain a ferrite core, currently supplied by Fireye with the cable. The cable end with the ferrite core must be mounted at the control end. High frequency currents flow more to the surface of the conductor. The 60 Hz ground system, properly designed, has sufficient low-impedance at 60 Hz to maintain all metal surfaces at the same ground reference. But, this same system is unable to provide this at higher frequencies, because of the increased impedance caused by the ‘skin effect’. The purpose of the ferrite core is to provide a low-impedance at these higher frequencies and absorb this unwanted energy.

Care must be taken not to route the ED580 cable in close proximity to any starter motor contactors located in the control panel or across any high voltage ignition wires. Refer to Fireye bulletin E-8002 for proper installation.

COMMUNICATIONS

When interfacing Fireye controls to a communication system, be it an E500, PLC or other microprocessor based device, ferrite cores should also be utilized. Proper twisted shielded pair cable must be utilized. In a multi-drop system, the shields should be tied together within a cabinet and not to any ground point. The shield at the source end of the cable of the multi-drop connection can then be terminated to ground. Source end is defined as the originating end of the communication system

Care must be taken not to route communication cables in close proximity to any starter motor contactors located in the control panel or across any high voltage ignition wires. Refer to Fireye bulletin E-8002 for proper installation.

SCANNERS

The armored cable supplied with the Ultra-Violet and Infrared scanners should be connected to equipment by means of a good mechanical connection such as a conduit fitting. It may be necessary to utilize heat insulator (P/N 35-69) to isolate the sensing end of the scanner from boiler ground. Care must be taken not to route the scanner cable across the high voltage ignition cable. The high energy ignition cable should be checked periodically for cracking, connections and aging.

In applications using flame rod units and the MERT amplifier, it may be beneficial to route a separate return wire from the S1 terminal to the flame rod assembly. This will minimize the effects of transient currents flowing into the MicroM.

In all cases, scanner wires should be routed in separate conduit and not joined with any high voltage AC or ignition cables.

MAINTENANCE

Periodically, the spark electrode should be inspected for proper gapping and cracked ceramics. At ignition time, the high energy from the ignition transformer will attempt to conduct to the point of least resistance and with an improper spark gap, where the conduction takes place will no longer be controlled.

The VA rating of the control transformer must be sized to handle the inrush currents of the pilot solenoid and ignition transformer at PTFI and then the inrush currents of the main fuel valve assembly at MTFI time.

Inspect neatness of wiring in junction boxes and cabinets. It is best to have connections short and direct and also not having wires bunched up and tied off. Also, connections should be periodically inspected for tightness and corrosion.

INSTALLATION - UV SCANNERS

Where possible, obtain the burner manufacturer's instructions for mounting the scanner. This information is available for most standard burners. The scanner mounting should comply with the following general instructions:

1. Position the UV1A, UV2 scanner within 30 inches of the flame to be monitored; the 45UV5 within 72 inches, closer if possible.
2. Select a scanner location that will remain within the ambient temperature limits of the UV Scanner. If cooling is required, use an insulating coupling (Fireye P/N 35-69 for UV1A, UV2 Scanners, P/N 35-127-1 for 45UV5) to reduce conducted heat.
3. The UVlA, UV2, 45UV5 Scanners are designed to seal off the sight pipe up to 1 PSI pressure. Higher furnace pressures should be sealed off. To seal off positive furnace pressure up to 100 PSI for UV1A, UV2 Scanners, install a quartz window coupling (#60-1257) For 45UV5 Scanners, use #60-1199 coupling. Add cooling air to reduce the scanner sight pipe temperature.
4. Install the scanner on a standard NPT pipe (UV1A: 1/2", UV2: 3/8", 45UV5: 1") whose position is rigidly fixed. If the scanner mounting pipe sights through the refractory, do not extend it more

than halfway through. Swivel flanges are available if desired (#60-302 for UV1A, UV2 Scanners, #60-1664-3 for 45UV5). The sight pipe must permit an unobstructed view of the pilot and/or main flame, and both pilot and main flames must completely cover the scanner field of view.

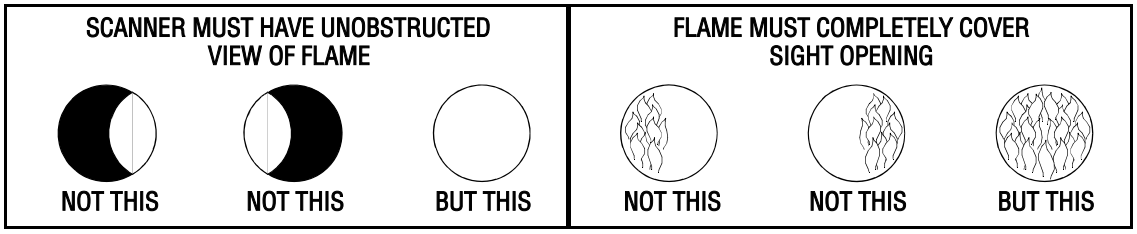

5. Smoke or unburned combustion gases absorb ultraviolet energy. On installations with negative pressure combustion chambers, a small hole drilled in the UV1A, UV2 sight pipe will assist in keeping the pipe clean and free from smoke. For positive pressure furnaces, provide clean air to pressurize the sight pipe, if necessary.
6. Two UV1A or UV2 Scanners may be installed on the burner if it is necessary to view two areas to obtain reliable detection of the flame. They should be wired in parallel. Only one repetitive self- checking 45UV5 Scanner may be installed on a burner.

To increase scanner sensitivity with UV1A, UV2 Scanners, a quartz lens permits location of the scanner at twice the normal distance. Use 1/2" x 1 1/2" pipe nipple between UV1A Scanner and the coupling. Use 3/8" pipe nipple and a 1/2" x 3/8" bushing on UV2 installations.

7. Request the assistance of any Fireye field office for recommendations of a proper scanner installation on a non-standard application.

TYPICAL SCANNER INSTALLATIONS

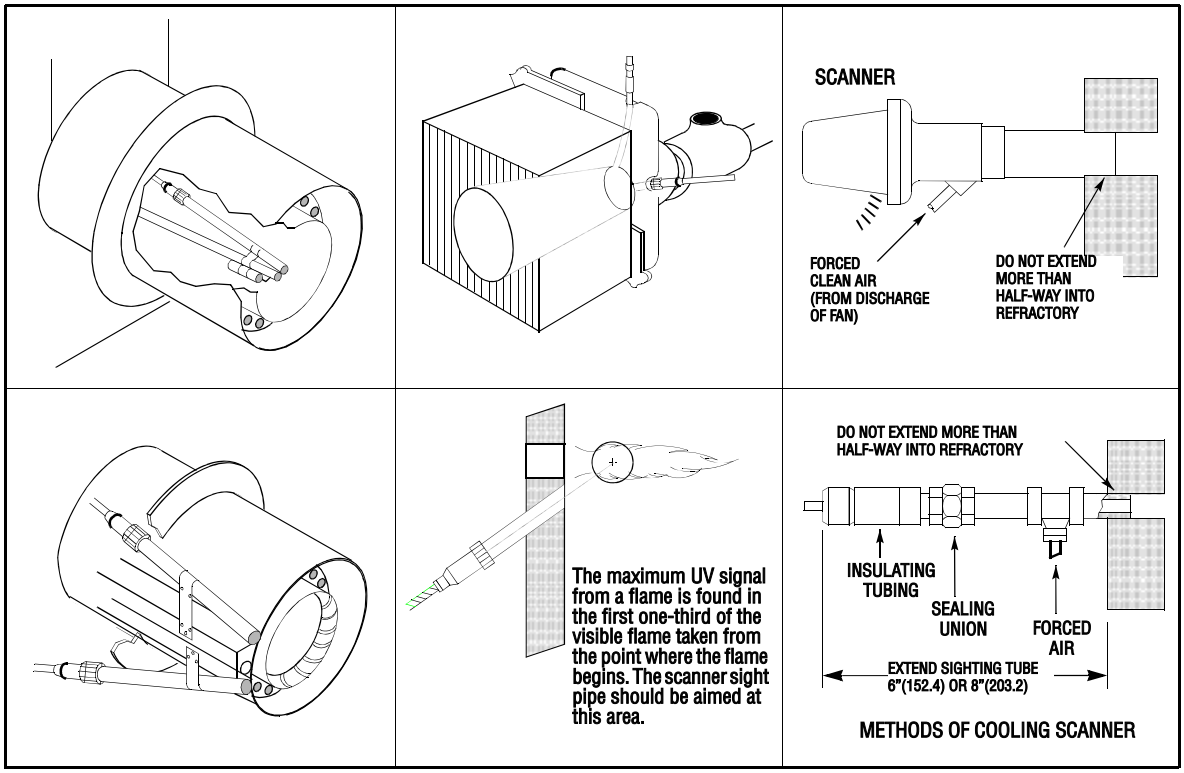

OPERATION — 45UV5 SELF-CHECKING UV SCANNER

Self-checking ultraviolet scanners should be used in applications where burner firing operation is continuous or where the burner is on for long periods of time without recycling. In addition, ultraviolet self-checking systems are mandatory in some locations.

The operation of this type of system consists of maintaining the flame scanning capability at all times while also proving that the ultraviolet tube is firing properly. This is done periodically by mechanically closing off the sight of the UV tube and checking to make sure that the flame signal goes away. A shutter assembly in the 45UV5 scanner performs this function. The diagram below explains the process further.

If the shutter assembly in the scanner fails, the tube is faulty, or there is insufficient power to the scanner, the MicroM will LOCKOUT and display the following message LOCKOUT CHECK SCANNER. The ultraviolet tube is replaceable (P/N 4-314-1).

A lockout will result if a minimum signal is detected for three consecutive shutter closed periods.

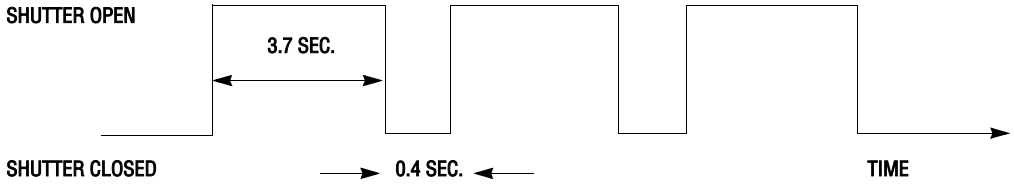

WIRING - UV SCANNERS

To connect the scanner to the control, the UV1A Scanner is supplied with 36” or 72” of flexible cable.

The 45UV5 is supplied with four 72 inch lead wires. Install them in a suitable length of flexible armor cable and connect it to the control. A conduit connector is supplied with the scanner. Connect black wires (shutter) to terminals L1, L2; red wires (UV tube) to terminals S1, S2.

If it is necessary to extend the scanner wiring, the following instructions apply:

Scanner wires should be installed in a separate conduit. The wires from several scanners may be installed in a common conduit.

1. Selection of Wire
   a. Wiring: For extended scanner wiring up to 500 feet, and for shorter lengths to reduce signal loss, use a shielded wire (Belden 8254-RG62 coaxial cable, or equal) for **each scanner wire** of UV1A, UV2 and **each red wire** of the 45UV5. **The ends of the shielding must be taped and not grounded.**
   b. Asbestos insulated wire should be avoided.
   c. Multiconductor cable is not recommended without prior factory approval.
2. High voltage ignition wiring should not be installed in the same conduit with flame detector wires.

INSTALLATION—INFRARED SCANNER TYPE 48PT2

Where possible, obtain the burner manufacturer's instructions for mounting the scanner, otherwise proceed as follows:

A single scanner is used to detect both pilot and main flames. The sight pipe on which the scanner mounts must be aimed so that the scanner sights a point at the intersection of main and pilot flames.

Proper scanner positioning must assure the following:

1. Reliable pilot flame signal.
2. Reliable main flame signal.
3. A pilot flame too short or in the wrong position to ignite the main flame reliably, must not be detected.
4. Scanner must have an unobstructed view of flame being monitored.
5. Flame being monitored must completely cover the scanner field of view.
6. To avoid nuisance shutdowns, it is important to avoid sighting hot refractory and to keep scanner temperature low (below 125° F) (50°C).

When the proper position has been established, drill a hole through the furnace wall and install a 4" to 8" length of threaded 1/2" black iron pipe on which to mount the 48PT2 scanner.

7. When satisfactory sighting position has been confirmed by operating tests, the sight tube should be firmly welded in place.

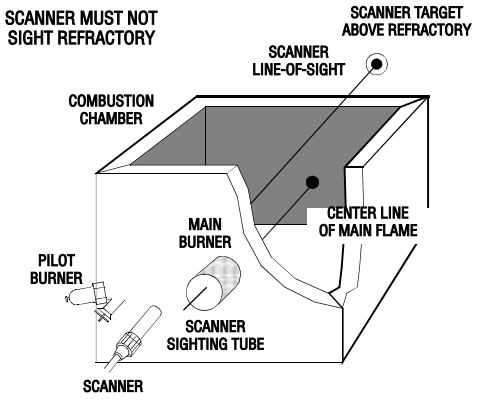

Wiring

Attach the cable supplied with the scanner to a junction box. Splice the cable wires to a pair of wires not smaller than #l8. Install the complete run in a separate conduit to the control. **Continuous conduit bonding between scanner and the control is mandatory!** Scanner may be located up to 100 feet from control. Do not pass scanner wiring through any junction box containing other wires. Do not run other wires through scanner conduit. Asbestos insulated wire should be avoided.

Keeping the Scanner Cool

The Infrared Scanner (Temperature Limit 125° F) should never get too hot to grasp comfortably in the hand. Keep the scanner cool by one or more of the following methods.

1. Use 6" to 8" length of pipe between scanner and hot furnace front plate.
2. Use insulating tube (P/N 35-69) on the end of the iron pipe.
3. Force air into sighting tube. Use Fireye Sealing Union (P/N 60-801).
4. Make sure sighting tube does not extend more than halfway into refractory wall.

INSTALLATION - 69NDI FLAME ROD

The 69NDl flame rod proves a gas pilot flame and/or main gas flame. It is a spark plug type unit consisting of 1/2" NPT mount, a KANTHAL flame rod, a glazed porcelain insulating rod holder and a spark plug connector for making electrical connections. The 69ND1 is available in 12", 18" or 24" lengths.

The flame rod may be located to monitor only the gas pilot flame or both the gas pilot and main gas flames. It is mounted on a 1/2" NPT coupling.

The following instructions should be observed:

1. Keep flame rod as short as possible.
2. Keep flame rod at least 1/2" from any refractory.
3. Flame rod should enter the pilot flame from the side so as to safely prove an adequate pilot flame under all draft conditions.
4. If the flame is nonluminous (air and gas mixed before burning), the electrode tip should extend at least 1/2" into the flame, but not more than halfway through.

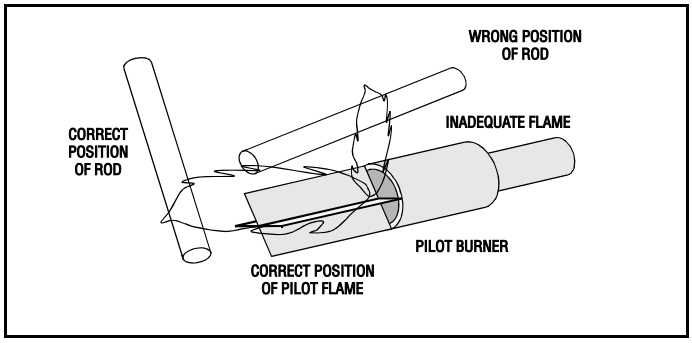

5. If the flame is partly luminous, the electrode tip should extend only to the edge of the flame. It is not necessary to maintain absolutely uninterrupted contact with the flame.
6. It is preferable to angle the rod downward to minimize the effect of sagging and to prevent it from coming in contact with any object.
7. An adequate grounding surface for the flame must be provided. The grounding surface in actual contact with the flame must be at least four times greater than the area of the portion of the flame rod in contact with the flame. It is essential to adjust the flame rod and ground area ratio to provide a maximum signal reading.

NOTE: Interference from the ignition spark can alter the true signal reading by adding to, or subtracting from it. This trend sometimes may be reversed by interchanging the primary wires (line voltage) to the ignition transformer. This interference can also be reduced by the addition of grounded shielding between the flame rod and ignition spark.

8. Proven types of flame grounding adapters, as shown below, may be used to provide adequate grounding surface. High temperature stainless steel should be used to minimize the effect of metal oxidation. This assembly may be welded directly over the pilot or main burner nozzle.

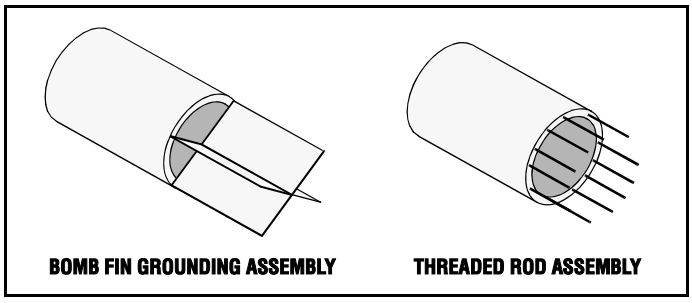

MAINTENANCE

Type 48PT2 Infrared and Type UV1A, UV2 and 45UV5 Ultraviolet Scanners

The viewing area of the scanner must be kept clean. Even a small amount of contamination will reduce the flame signal reaching the detector by a measurable amount. Wipe the viewing area routinely using a soft cloth dampened with concentrated detergent.

— Type 48PT2 Scanners include a replaceable #4-263-1 Firetron cell.

— Type 45UV5 Scanners include a replaceable #4-314-1 UV tube.

Type 69ND1 Flame Rod

The flame rod and its insulator should be kept clean by washing routinely with soap and water. Rods should be routinely replaced as they oxidize.

Flame Signal Strength

Routine observation of the flame signal strength will forewarn any deterioration in the capability of the flame detector or its application.

Contacts

There are no accessible contacts in the MicroM. Where contacts are used, their design assures long trouble-free life when the load circuits are maintained within the published load ratings.

Humidity

In areas of high humidity, the control chassis should be removed and placed in a dry atmosphere when the system is expected to be out of service for an extended period.

Periodic Safety Check

It is recommended that a procedure be established to test the complete flame safeguard system at least once a month,. This test should verify the proper operation of all limit switches and safety interlocks as well as flame failure protection and fuel safety shutoff valve tightness.

Rotation

It is recommended that control and scanner units purchased as spares be installed periodically to ensure proper operation.

FIGURE 16. Mounting 45UV5 Scanner

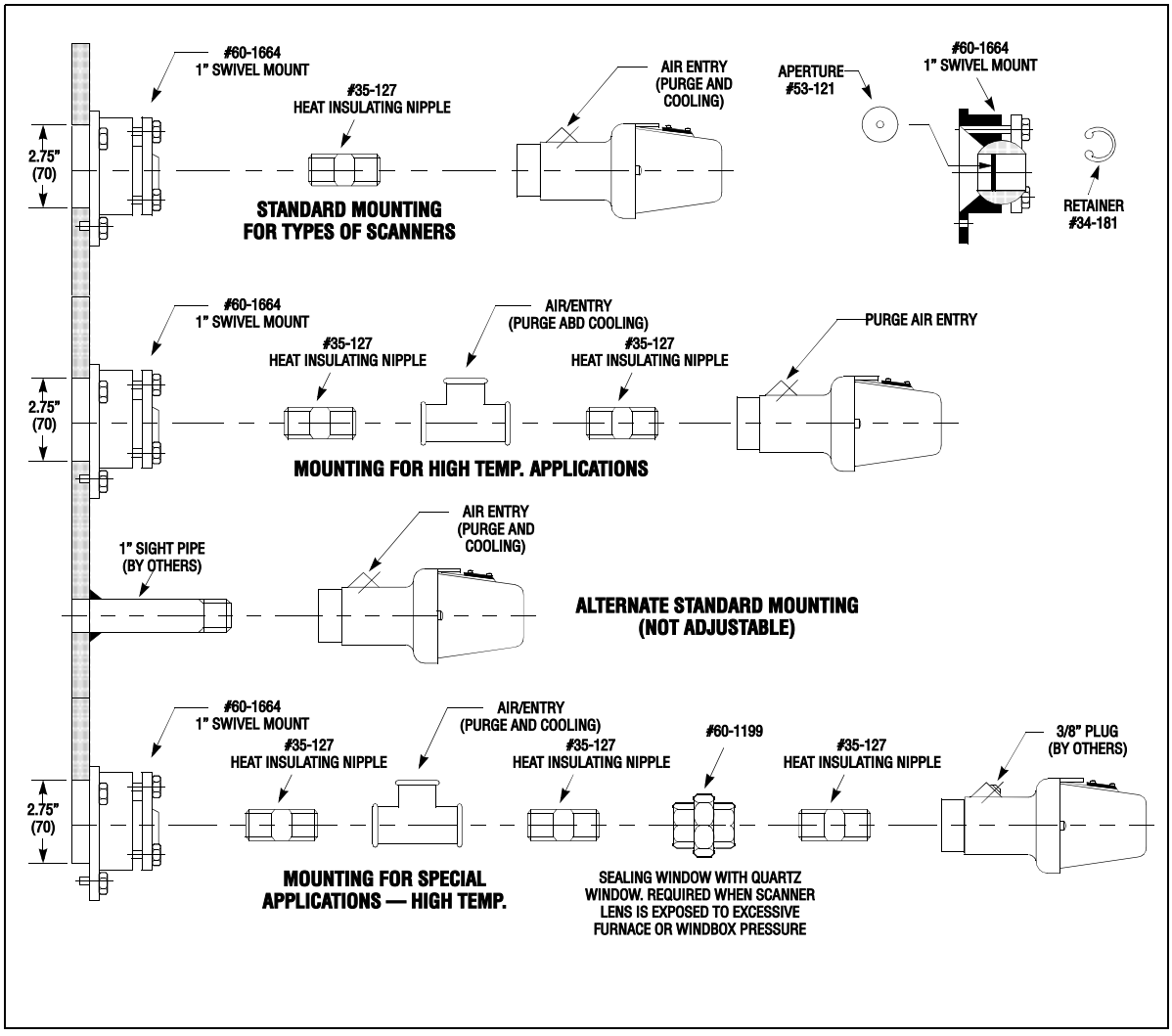

FIGURE 17. UV8A Scanner

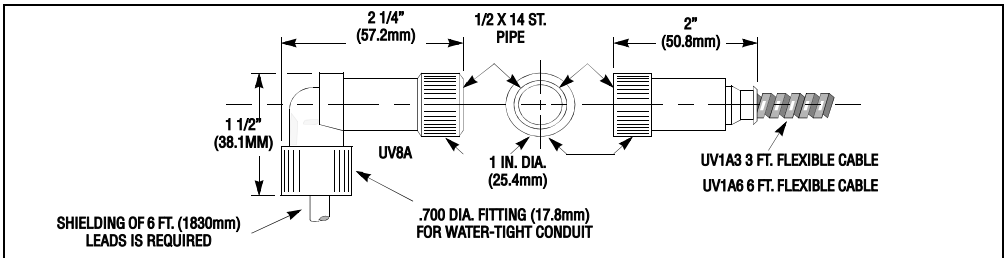

WARNING: The leads from the UV8A Scanner to the control **must be shielded** to prevent electrical noise from generating a false flame signal to the control.

FIGURE 18. Mounting UV1A/UV1B Scanners

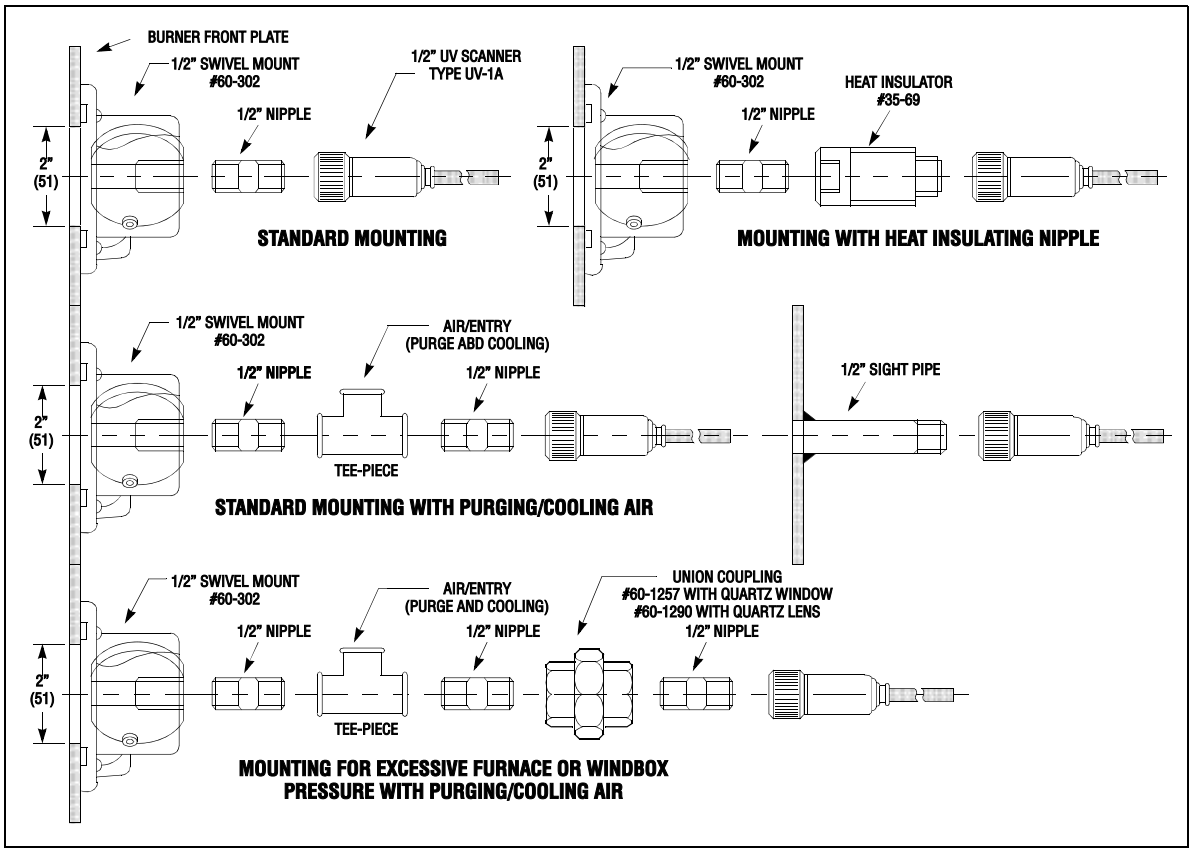

M-SERIES TO M-SERIES II TO MICROM CROSS REFERENCE LISTING

M-SERIES	M-SERIES II REPLACEMENT MODULES				MicroM REPLACEMENT MODULES			
Part Number	Chassis	Amplifier	Programmer	Programmer Dipswitch #8	Chassis	Amplifier	Programmer	Programmer Dipswitch #6
UVM1D	MC120	MAUV1T	MP100	N/A	MEC120	MEUV1	MEP100	N/A
UVM1F	MC120	MAUV1	MP100	N/A	MEC120	MEUV4	MEP100	N/A
TFM1D	MC120	MART1T	MP100	See Note #1	MEC120	MERT1	MEP100	N/A
TFM1F	MC120	MART1	MP100	See Note #1	MEC120	MERT4	MEP100	N/A
UVM2	MC120	MAUV1	MP230	OFF	MEC120	MEUV4	MEP230	C
TFM2	MC120	MART1	MP230	OFF	MEC120	MERT4	MEP230	C
UVM3	MC120	MAUV1	MP230	ON	MEC120	MEUV4	MEP230	O
TFM3	MC120	MART1	MP230	ON	MEC120	MERT4	MEP230	O
UVM3H	MC120	MAUV1	MP230H	ON	MEC120	MEUV4	MEP230H	O
TFM3H	MC120	MART1	MP230H	ON	MEC120	MERT4	MEP230H	O
UVM5	MC120	MAUV1	MP560	ON	MEC120	MEUV4	MEP560	O
UVM6	MC120	MAUV1	MP560	See Note #2	MEC120	MEUV4	MEP560	C
- N/A — Not Applicable - Programmer Dipswitches apply to MP230H, and MP560 only. - Dipswitch #8 sets Recycle / Non-Recycle Operation. - MP560 Programmer Module has “Check-Run” Switch. - Note #1: For Standing Pilot, clip out red jumper on MP100. - Note #2: Dipswitch #8 ON when red jumper of UVM6 is clipped.					- N/A — Not Applicable - Programmer Dipswitches apply to MEP200, and MEP500 Series Programmers - Dipswitch #6 sets Recycle / Non-Recycle Operation. (O = Non-Recycle, C = Recycle) - MEP500 Series Programmer Module has “Check-Run” Switch			

PURGE	PTFI	M-Series II PROGRAMMER DIPSWITCH SETTINGS							MicroM PROGRAMMER DIPSWITCH SETTINGS		
TIME	TIME	#1	#2	#3	#4	#5	#6	#7	#1	#2	#4
7	5	ON	OFF	OFF	OFF	OFF	ON	OFF	C	C	C
7	5	OFF	ON	OFF	OFF	OFF	ON	OFF	C	C	C
30	5	OFF	OFF	ON	OFF	OFF	ON	OFF	O	C	C
7	10	OFF	ON	OFF	OFF	OFF	OFF	ON	C	C	O
90	5	OFF	OFF	ON	ON	OFF	ON	OFF	O	O	C
30	10	OFF	OFF	ON	OFF	OFF	OFF	ON	O	C	O
60	10	OFF	OFF	OFF	ON	OFF	OFF	ON	C	O	O
90	10	OFF	OFF	ON	ON	OFF	OFF	ON	O	O	O
- Dipswitches #1 through #5 set Purge Timing - Dipswitches #6 and #7 set TFI Timing									- Dipswitches #1 through #2 set Purge Timing - Dipswitch #4 sets TFI Timing		

M-SERIES TIMING CARDS	PURGE TIME	PTFI TIME
MT55	5	5
MT74	7	4
MT304	30	4
MT710	7	10
MT904	90	4
MT3010	30	10
MT6010	60	10
MT9010	90	10

NOTICE

When Fireye products are combined with equipment manufactured by others and/or integrated into systems designed or manufactured by others, the Fireye warranty, as stated in its General Terms and Conditions of Sale, pertains only to the Fireye products and not to any other equipment or to the combined system or its overall performance.

WARRANTIES

FIREYE guarantees for *one year from the date of installation or 18 months from date of manufacture* of its products to replace, or, at its option, to repair any product or part thereof (except lamps and photocells) which is found defective in material or workmanship or which otherwise fails to conform to the description of the product on the face of its sales order. **THE FOREGOING IS IN LIEU OF ALL OTHER WARRANTIES AND FIREYE MAKES NO WARRANTY OF MERCHANTABILITY OR ANY OTHER WARRANTY, EXPRESS OR IMPLIED.** Except as specifically stated in these general terms and conditions of sale, remedies with respect to any product or part number manufactured or sold by Fireye shall be limited exclusively to the right to replacement or repair as above provided. In no event shall Fireye be liable for consequential or special damages of any nature that may arise in connection with such product or part.

FIREYE
3 Manchester Road
Derry, New Hampshire 03038 USA
www.fireye.com

MC-5000
OCTOBER 14, 2009
Supersedes January 9, 2009

MULTI-DRIVE™ Solid State DC Motor Speed Control With Adj. Acceleration & Deceleration

Installation and Operating Instructions

See SAFETY WARNING on page 4.

Model KBMD-240D



KB Part No. 9370A

- Dual Voltage Input (120V or 240V)
- Up to 1HP-120V & 2HP-240V with Auxiliary Heatsink* (P/N 9861)
- Multiple Horsepower capability with Plug-In Horsepower Resistor® (Supplied Separately)
- Forward-Brake-Reverse Switch (P/N 9860) (Optional)
- Rugged NEMA I enclosure
- Contains AC Line and Armature Fusing**
- Patented KBMM Speed Control Module
- Current Limit LED Indicator

* Rating without Heatsink is 3/4HP at 120V and 1-1/2HP at 240V.
** Armature Fuse supplied separately.

PENTA KB POWER™

A COMPLETE LINE OF MOTOR DRIVES

© 1997 KB ELECTRONICS, INC.

IMPORTANT

Read these simplified instructions before operating control.
(Remove (2) 6-32 screws and slide off front cover.)

- Set the Dual Voltage Switch to the correct AC line input voltage, "115" or "230."
- Install the correct Plug-In Horsepower Resistor® according to input voltage and motor horsepower (see chart)—Table 3, page 3.
- Install proper size Armature Fuse—(see Fuse Selection Chart).
- Install Auxiliary Heatsink on controls used with motors rated above 3/4 HP on 120 volts and 1-1/2 HP on 240 volts.
- Recheck connections: AC line to L1 and L2; armature to A+ and A−; and field (Shunt motor only) to F+ and F−. Connect ground via ground screw. (Note if motor runs in improper direction reverse armature leads.)
- Nominal trimpot settings are as follows (expressed in % of full CW rotation):

Table 1

MIN (minimum speed):	15%
MAX (maximum speed):	60%
IR (IR compensation):	15%
CL (current limit/torque):	65%
ACCEL (acceleration start):	20%
DECEL (deceleration):	20%

- (For detailed instructions see Selection IV, pages 9 & 10.)

FOR TECHNICAL ASSISTANCE CALL TOLL FREE (OUTSIDE FLORIDA ONLY) 1-800-221-6570.

LIMITED WARRANTY

For a period of 18 months from date of original purchase KB will repair or replace without charge devices which our examination proves to be defective in material or workmanship. This warranty is valid if the unit has not been tampered with by unauthorized persons, misused, abused, or improperly installed and has been used in accordance with the instructions and/or ratings supplied. The aforegoing is in lieu of any other warranty or guarantee expressed or implied, and we are not responsible for any expense (including installation and removal), inconvenience, or consequential damage, including injury to any person, caused by items of our manufacture or sale. Some states do not allow certain exclusions or limitations found in this warranty so that they may not apply to you. In any event, KB's total liability, under all circumstances, shall not exceed the full purchase price of this unit. (Rev. 10/84)

The information contained in this brochure is intended to be accurate. However, the manufacturer retains the right to make changes in design which may not be included herein.

Multi-Drive® is versatile.

- **DUAL AC VOLTAGE**

1. The basic Model KBMD-240D has dual AC line voltage input capability** which provides 0-full speed capability on DC motors from 1/100th–3/4 HP at 120 VAC and 1/50th–1-1/2 HP at 240 VAC (set the Dual Voltage Switch to the corresponding input voltage "115" or "230").

- **HORSEPOWER EXTENDER**

2. Add the KB Auxiliary Heatsink to increase the horsepower capability to 1/100th–1 HP at 120 VAC and 1/50–2 HP at 240 VAC. KB Part No. SC-9861.

- **ALL MOTOR SIZES**

3. Multi-Drive® adapts to a complete range of motor horsepower by selecting and installing the proper Plug-In Horsepower Resistor® (see chart).

- **REVERSIBLE**

4. A FWD-BRK-REV Switch Kit is available as an option.



KBMD-240D



KBMD-240D
With Auxiliary
Heatsink
& FWD-BRK-REV Switch



KB Part No.
SC-9860

Forward Brake
Reverse Switch



Plug-In
Horsepower
Resistor®

NOTE: An optional FORWARD-BRAKE-REVERSE Switch is available.

TABLE 2. ELECTRICAL RATINGS*

MODEL NUMBER	AC LINE VOLTAGE (VAC)**	MOTOR VOLTAGE (VDC)***	AC LOAD CURRENT (RMS AMPS)	DC LOAD CURRENT (AVG. AMPS)	MAX. HP
KBMD-240D Without Auxiliary Heatsink	120	90-130	12.0	8.0	3/4
	240	180	12.0	8.0	1-1/2
KBMD-240 With Auxiliary Heatsink	120	90-130	16.0	11.0	1
	240	180	16.0	11.0	2

* The Multi-Drive can be converted to the higher rating by installing KB's Auxiliary Heatsink.

** The Multi-Drive must be set for either 120 V or 240 VAC line voltage input by setting the Dual Voltage Switch to "115" or "230". When the control is set for "115" use only 90-130 VDC rated motors. When the control is set for "230" use only 180 VDC rated motors.

*** The Multi-Drive also supplies field voltage for shunt motors as follows:
On 120 VAC line, field voltage is 100 VDC using F–, F+ and 50 VDC using L_1, F–
On 240 VAC line, field voltage is 200 VDC using F–, F+ and 100 VDC using L_1, F–

TABLE 3. PLUG-IN HORSEPOWER RESISTOR CHART***

PLUG-IN HORSEPOWER RESISTOR® CHART		
AC LINE VOLTAGE		PLUG-IN HORSEPOWER RESISTOR* (Resistance Value-OHMS) **
120 VAC	240 VAC	
MOTOR HORSEPOWER RANGE		
ARMATURE VOLTAGE 90-130 VDC	ARMATURE VOLTAGE 180 VDC	
1/100-1/50	1/50-1/25	1.0
1/50-1/30	1/25-1/15	51
1/30-1/20	1/15-1/10	35
1/20-1/12	1/10-1/6	25
1/12-1/8	1/6-1/4	18
1/8-1/5	1/4-1/3	1
1/4	1/2	05
1/3	3/4	035
1/2	1	025
3/4	1 1/2	015
1*	2*	01

Motor horsepower and armature voltage must be specified when ordering so that proper Horsepower Resistor* will be supplied.

* Use with Auxiliary Heatsink.

** For overlapping motor horsepower range use lower value Plug-In Horsepower Resistor.

*** Customer choice use PHR and avoid recalibration or select one resistor and recalibrate for different motors.

TABLE OF CONTENTS

Section		Page
	Simplified Instructions	
	Warranty	2
	MULTI-DRIVE® Versatility	
	Electrical Ratings	3
	Introduction	6
I	**Application Information**	6
	A. Motor Type	6
	B. Torque Requirements	6
	C. Acceleration Start	6
	D. Limitations in Use	6
II	**Installation Instructions**	7
	A. Location and Mounting	7
	B. Initial Setup	7
	C. Wiring	7
	D. Fusing	8
III	**Operation**	9
IV	**Adjustments and Control Functions**	9
	A. Acceleration Start (ACCEL)	9
	B. Maximum Speed (MAX) Adjustment	9
	C. Minimum Speed (MIN) Adjustment	10
	D. Current Limit (CL)/ Torque-Adjustment	10
	E. IR-Comp (IR) Adjustment	10
V	**Trouble Shooting Guide**	11
VI	**Internal Wiring Diagrams**	13

LIST OF ILLUSTRATIONS

Figure		Page
1.	MULTI-DRIVE® Versatility	3
2.	Location of Features and Functions	5
3.	Mounting Dimensions	7
4.	Connection Diagram	8
5.	ACCEL/DECEL Trimpot Adjustment	9

LIST OF TABLES

Table		Page
1.	Nominal Trimpot Settings	2
2.	Electrical Ratings	3
3.	Plug-In Horsepower Resistor Chart	3
4.	General Performance Specifications	5
5.	Minimum Supply Wire Size Requirements	8

SAFETY WARNING—PLEASE READ CAREFULLY

This product should be installed and serviced by a qualified technician, electrician or electrical maintenance personnel familiar with its operation and the hazards involved. Proper installation which includes wiring, mounting in proper enclosure, fusing or other overcurrent protection and grounding, can reduce the chance of electric shocks, fires or explosion in this product or products used with this product, such as electric motors, switches, coils, solenoids and/or relays. Eye protection must be worn and insulated adjustment tools must be used when working with control under power. This product is constructed of materials (plastics, metals, carbon, silicon, etc.) which may be a potential hazard. Individual material safety data sheets (MSDS) are available upon request. Proper shielding, grounding and filtering of this product can reduce the emission of radio frequency interference (RFI) which may adversely affect sensitive electronic equipment. If information is required on this product, contact our factory. It is the responsibility of the equipment manufacturer and individual installer to supply this safety warning to the ultimate user of this product. (SW effective 7/89)

TABLE 4. GENERAL PERFORMANCE SPECIFICATIONS

Speed range (ratio)	50:1
Load regulation (% base speed) (0–full load; 50:1 speed range)	1*
Line voltage regulation (% base speed) (at full load; 100–130 VAC)	1/2*
Control linearity (% speed vs. dial rotation)	2
CL/torque range (% full load)	0–200
ACCEL/DECEL time period (0–full speed) (secs.)	.2–10
Min. speed trimpot range (% full speed)	0–30*
Max. speed trimpot range (% full speed)	50–110*
IR compensation trimpot range (at specified full load) (volts)	0–24
Maximum allowable ambient temperature at full rating (°C/°F)	50/122

*Performance is for SCR rated PM motors only. Lower performance can be expected with other motor types. Factory setting is for 3% load regulation. To obtain superior regulation, see Sec. IV E. (page 10). Other factory trimpot settings are as follows: CL-150% FL, ACCEL-2 secs., DECEL-2 secs., MIN-(0)-speed, MAX-full speed & IR-6 volts.

FIG. 2 LOCATION OF FEATURES AND FUNCTIONS

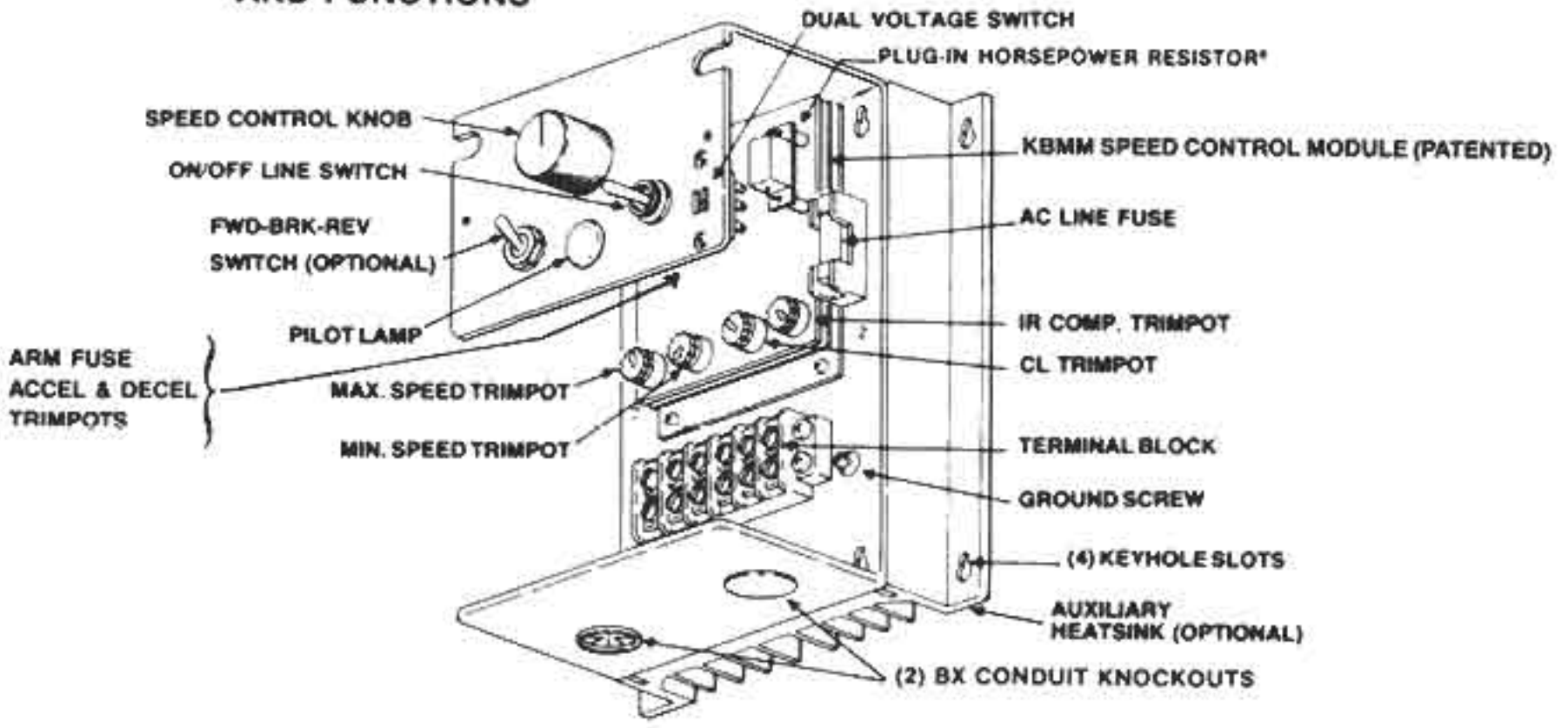

INTRODUCTION

The New Multi-Drive® Full Wave Solid State DC Motor Speed Control with the patented KBMM Speed Control Module represents the latest state-of-the-art design achievable through modern technology.

Features Include: Short circuit protection, CL LED indicator, Auto Inhibit.

- ***Integrated Circuitry***
  Used to control and amplify command and reference levels with both closed and open loop feedback to provide superior motor regulation. (Speed changes due to load, line voltage, or temperature variations are held to minimum levels).
- ***High Quality Components***
  Selected and tested for proven dependability.
- ***Transient Protection***
  Used to prevent failure of the power bridge circuit caused by voltage spikes on the AC line.
- ***High Reliability***
  When used in accordance with the instructions included in this manual, the Multi-Drive® will provide years of trouble-free operation.

SECTION I. APPLICATION INFORMATION

A. ***Motor Type.*** Multi-Drive® is designed for Permanent Magnet (PM) and Shunt Wound D.C. motors. Controls operated on 120 volt AC inputs are designed for 90 volt SCR rated motors. Controls operated on 240 volt AC inputs are designed for 180 volt SCR rated motors. Use of higher voltage motors will result in degradation of full speed performance. Also, if motor is not an SCR rated type, the actual AC line amperage at full load should not exceed the motor's DC nameplace rating.

B. ***Torque Requirements.*** When replacing an AC induction motor with a DC motor and speed control, consideration must be given to the maximum torque requirements. The full load torque rating of the DC motor must be equal to, or greater than, that of the AC motor.

C. ***Acceleration Start.*** The Multi-Drive® contains an adjustable acceleration start feature which allows the motor to smoothly accelerate from 0–full speed over a time period of .2–10 seconds. The "ACCEL" is factory set at 2 seconds.

D. ***Limitations in Use.*** Multi-Drive® controls are designed for use on machine applications.

CAUTION: Consult factory before using on constant horsepower applications such as saws or drill presses. Do not use in explosive atmosphere.

CAUTION: Be sure the Multi-Drive® is used within its max. ratings. Follow all installation instructions carefully. (Refer to Section II.)

SECTION II. INSTALLATION INSTRUCTIONS

A. *Location and Mounting.* The Multi-Drive® control should be mounted on a flat surface and located in an area where it will not be exposed to contaminants such as water, metal chips, solvents, or excessive vibration.

When mounting in an airtight enclosure, the air space should be large enough to provide adequate heat dissipation. The maximum allowable ambient temperature at full rating is 50°C (122°F). Consult your factory representative if more information is required.

NOTE: Adequate clearance must be allowed to permit motor and power cables to enter through BX knockouts on bottom of control.

FIG. 3 MOUNTING DIMENSIONS (INCHES, MM)

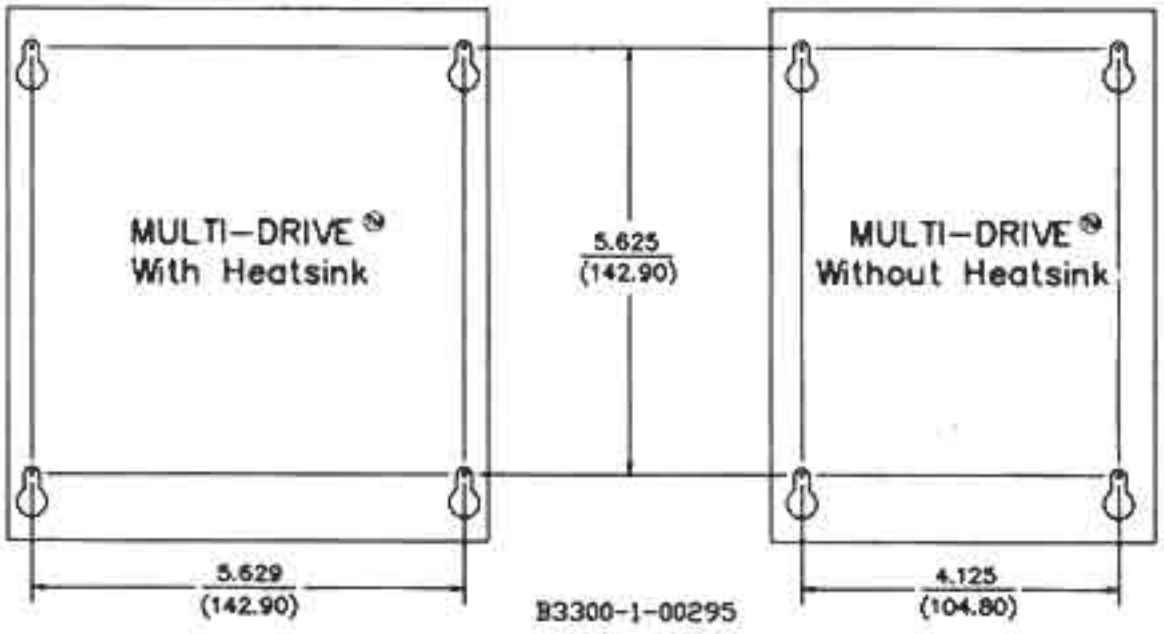

B. *Initial Setup.* WARNING: To prevent electrical shock turn power off before wiring.

(1) Slide open front cover by removing two 6-32 screws.
(2) Install Plug-In Horsepower Resistor® corresponding to motor voltage and horsepower. (See chart Table 3, page 3)
(3) Set the Dual Voltage Switch to proper position "115" or "230" which corresponds to the nominal AC input line voltage 120 or 240 VAC.
(4) Install proper Armature fuse according to Fuse Selection Chart. (Table 6, page 8)
(5) Trimpots have been factory adjusted. If readjustment is required see section IV pages 9 & 10.
(6) Install Auxiliary Heatsink if motor is larger than 3/4 HP on 120 VAC and 1-1/2 HP on 240 VAC. (Use (6) No. 10–32 screws)

C. *Wiring.* (See Fig. 4 for terminal arrangement and wiring information.)

(1) Connect the Multi-Drive® to a standard 120 V or 240 V 50/60 Hz power source. [Be sure the DVS is set to the proper voltage "115" or 230" and motor voltage corresponds to the line voltage. (e.g. 90–130 VDC motor on 115–120 VAC and 180 VDC motor 230–240 VAC)]
(2) Follow the recommended supply wire sizes as per Table 5. (For Stepdown operation see note on page 8.)
(3) Follow the NEC and other appropriate electrical codes. **CAUTION:** Separate branch protection must be provided on 240 V circuits.
(4) Replace front cover and the two 6–32 screws.

TABLE 5. MINIMUM SUPPLY WIRE SIZE REQUIREMENTS.

MAX. MOTOR AMPS (DC AMPS)	MAX. MOTOR HP 90 V	MAX. MOTOR HP 180 V	MINIMUM WIRE SIZE (AWG) Cu Only	
			MAX. 50 FOOT RUN	MAX. 100 FOOT RUN
8.0	3/4	1-1/2	16	14
11.0	1	2	14	12*

*Maximum recommended wire size

Application Note: Stepdown operation: The control can be set up for stepdown operation (e.g.: 90 VDC motors used with 240 VAC line input). If stepdown operation is required, the following procedure is used.

1. Place dual voltage switch in "115" position.
2. Cut out and remove the resistor R308 (large blue body) from the back of the dual voltage switch. For shunt wound motors only—connect motor field wires to F + and L_1 terminals.

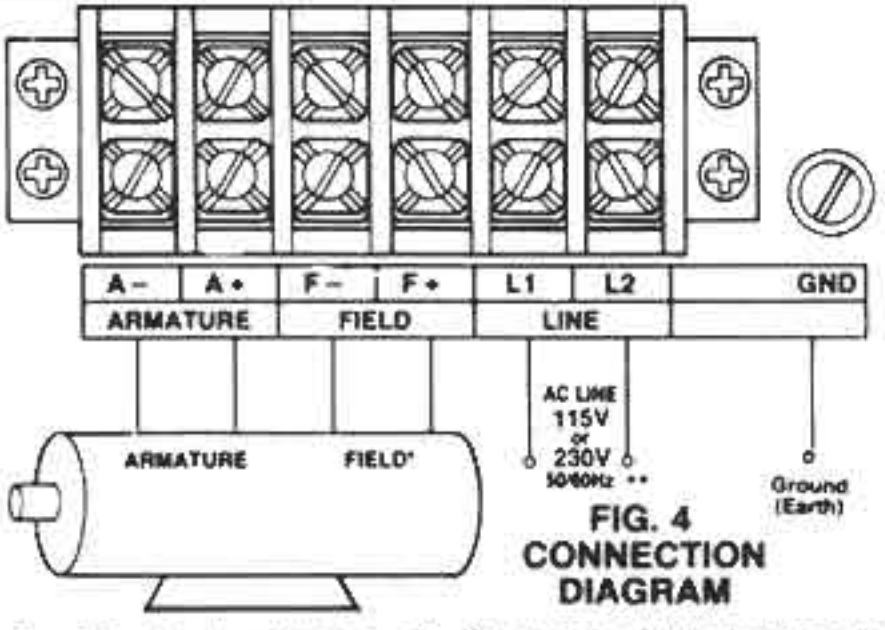

FIG. 4 CONNECTION DIAGRAM

* Use F– & F+ for shunt motors only. On motors with half voltage fields (e.g. 50 V field with 100 V rated armature) use L_1 & F+ terminals.
** Be sure to set the Dual Voltage Switch to the proper position "115" or "230".

TABLE 6. FUSE SELECTION CHART

90 VDC MOTOR	180 VDC MOTOR	APPROX. DC MOTOR CURRENT (AMPS)	FUSE RATING (AC AMPS) ARM	RECOM. RATING (AC AMPS) LINE
HORSEPOWER				
1/30	1/15	.33	1/2	12
1/20	1/10	.5	3/4	12
1/15	1/8	.65	1	12
1/12	1/6	.85	1-1/4	12
1/8	1/4	1.3	2	12
1/6	1/3	1.7	2-1/2	12
1/4	1/2	2.5	4	12
1/3	3/4	3.3	5	12
1/2	1	5.0	8	12
3/4	1-1/2	7.5	12	12
1	2	10.0	15	25

CAUTION: If control is wired to a transformer, it is advisable to switch the secondary to disconnect power. If the primary is switched, additional snubber capacitors may have to be added across the transformer output to prevent damage to the power bridge.

WARNING: Do not wire switch or relay in series with armature or catastrophic failure will result.

D. *Fusing.*

(1) The Multi-Drive® contains a built-in replaceable AC line fuse rated 20A-240 VAC. (Use Buss type MDA or equiv.) The AC line fuse protects the control against catastrophic failure. If the fuse blows, the control is miswired, the motor is shorted or grounded, or the Speed Control Module is defective. (**Note:** jumping of fuse will void warranty)

(2) Armature Fuse—Provides motor overload protection. Armature fuses are available from your distributor. Fuse at approximately 1.7 times the D.C. amperage rating of the motor. (See Fuse Selection Chart)

SECTION III. OPERATION

1. Set ON/OFF power switch to "OFF".
2. Set speed control knob to "0".
3. Set FWD-BRK-REV switch (if installed) to "FWD".
4. Turn power switch to "ON" gradually increase speed control knob setting. Motor should come up to speed smoothly and remain stable. (**NOTE:** If control fails to operate, see Troubleshooting Guide, Section V, p. 11, 12)

SECTION IV. ADJUSTMENTS AND CONTROL FUNCTIONS

The Multi-Drive® has been factory adjusted to provide 0 to full speed range using the speed control knob. Minimum and maximum speed trimpots are provided to change the speed from other than 0 to full speed. An acceleration start trimpot is factory set to provide motor acceleration from 0 to full speed over a time period of 2 seconds (approx.) each time the AC power is applied. The current limiting (CL, or torque output) adjustment is factory set to approximately one and a half times the motor rating. The IR Compensation (IR) is factory adjusted to provide excellent motor regulation under normal operation.

NOTE: In order for the IR comp and CL trimpot settings to be correct, the proper Plug-In Horsepower Resistor® must be installed for the particular motor and input voltage being used. Do not attempt to change the settings of the trimpots unless absolutely necessary since they are factory adjusted to near optimum settings.

The following procedure, presented in order of adjustment sequence, should be used when readjusting all trimpot functions:

FIG. 5

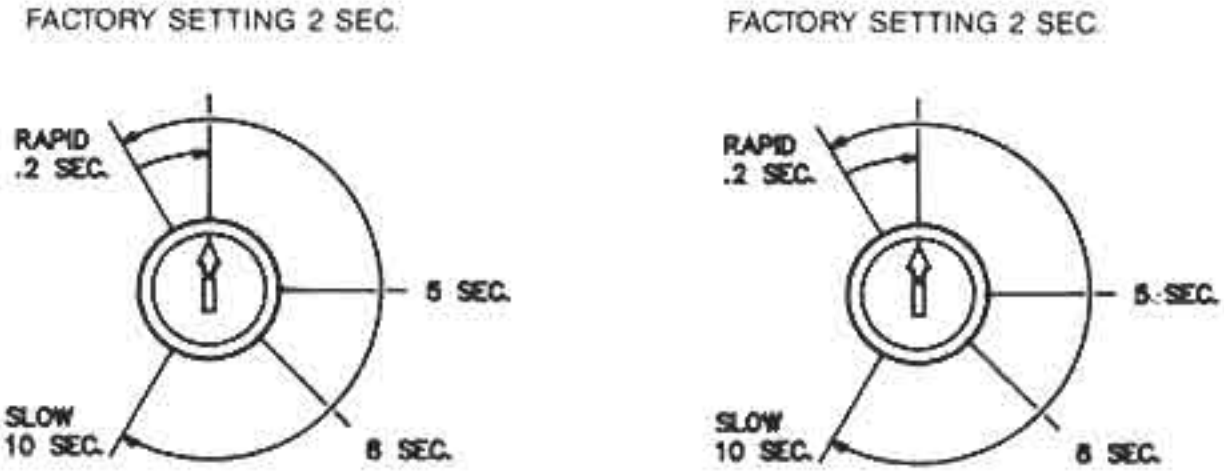

A. ***Acceleration Start and Deceleration.*** ACCEL and DECEL trimpots are located on the left side of the speed control module. If the ACCEL and/or DECEL are to be readjusted to different times, adjust trimpots according to Figure 5.

B. ***Maximum Speed Adjustment.*** Turn Speed Control Knob to full speed (maximum CW position). Adjust max. speed trimpot to new desired setting.

NOTE: Do not attempt to adjust the max. speed above the rated motor RPM since unstable motor operation may occur. For moderate changes in the max. speed, there will be a slight effect on the min. speed setting when the min. speed is set at zero. There may be significant variation in the min. speed setting if the min. speed is at a higher than zero setting.

C. ***Minimum Speed Adjustment.*** If a higher than zero minimum speed is desired, readjust the minimum speed by turning the speed control knob to zero setting (full CCW position). Then adjust the Min. Speed Trimpot to the desired setting.

> **NOTE:** The min. speed adjustment will affect the max. speed setting. Therefore, it is necessary to re-adjust the max. speed after the min. speed, and it may be necessary to repeat the sequence until both the min. and max. speeds are set to the desired levels.

D. ***Current Limit (CL/Torque Adjustment).*** CL circuitry is provided to protect the motor and control against overloads. The CL also limits the inrush current to a safe level during startup. The CL is factory set to approximately 1.5 times the full load rating of the motor. (CL trimpot is nominally set to approx. 75% of full CW rotation.) CL LED will light when control is in current limit.

> **NOTE:** The correct value Plug-In Horsepower Resistor® must be installed in order for the CL and IR comp. to operate properly.

To set the CL to factory specifications adjust as follows:

1. Set speed control knob at approximately 30–50% CW rotation. Set CL trimpot to full CCW position.
2. Connect a DC ammeter in series with the armature lead.
3. Lock shaft of motor (be sure CL pot is in full CCW position). Apply power and rotate CL pot CW slowly until DC ammeter reads 1.5 times motor rating (do not exceed 2 times motor rating).

E. ***IR Compensation Adjustment.*** IR compensation is provided to substantially improve load regulation. If the load presented to the motor does not vary substantially, the IR adjustment may be set at a minimum level (approximately 1/4 of full setting). The control is factory adjusted to approximately 3% regulation if superior performance is desired (less than 1% speed change of base speed from 0 to full load), then the IR comp should be adjusted as follows:

> **NOTE:** Excessive IR comp. will cause control to become unstable, which causes motor cogging.

1. Set IR comp. trimpot at approximately 25% of CW rotation. Run motor unloaded at approximately 1/3 speed and record RPM.
2. Run motor with maximum load and adjust IR comp. trimpot so that the motor speed under load equals the unloaded speed per step 1.
3. Remove load and recheck unloaded RPM. If unloaded RPM has shifted, repeat procedure for more exact regulation.

The MULTI-DRIVE™ is now compensated to provide minimal speed change under large variations of applied load.

SECTION V. TROUBLESHOOTING GUIDE

The following Troubleshooting Guide is intended for use by a qualified technician. The Guide is designed to isolate common malfunctions of the MULTI-DRIVE® and/or motor. It should be used with the parts lists and schematics contained in this manual.

SYMPTOM	POSSIBLE CAUSE	CORRECTIVE ACTION
1. Motor does not run; power ON indicator not lit.	1. Power switch in OFF position, or AC voltage not brought to L_1, L_2 terminals.	1. Move power switch to ON position. Correct wiring to control.
	2. Blown line fuse.	2. Replace line fuse with 20A rated 3AB-type fuse. If fuse blew due to miswiring, speed control module may be defective.
	3. Defective power switch.	3. Replace power switch.
2. Motor does not run; power ON indicator lit.	1. Speed control knob set to 0.	1. Turn knob CW to start motor.
	2. Defective motor.	2. Check for defective motor, worn brushes, etc. Replace motor.
	3. Plug-in Horsepower Resistor® not installed.	3. Install proper Plug-in Horsepower Resistor®
	4. Blown armature fuse.	4. Replace fuse with proper value.
3. Motor hums, or runs at very low speed (with control knob set at high number) or motor slows down substantially when load is applied.	1. Low voltage.	1. Check line voltage at control and rewire as required.
	2. Overload condition; control in current limit mode (CL trimpot not set correctly). (CL LED lit)	2. Reduce loading; CL trimpot setting may have to be increased. See Section IV.
	3. Plug-in Horsepower Resistor® not correct size.	3. Install proper size Plug-In Horsepower Resistor®
	4. Incorrect wiring. Armature and shunt connections interchanged (shunt motor only).	4. Correct wiring (armature has lower resistance than field).

SECTION V. TROUBLESHOOTING GUIDE

SYMPTOM	POSSIBLE CAUSE	CORRECTIVE ACTION
4. Erratic motor performance.	1. Defective motor, worn brushes, etc.	1. Repair motor.
	2. Overload condition.	2. Remove overload.
	3. Plug-in Horsepower Resistor® wrong size.	3. Replace Plug-in Horsepower Resistor® with proper size.
	4. IR comp and/or CL trimpots not set properly.	4. Readjust trimpots as per Section IV.
	5. Defective speed control module.	5. Replace module.
	6. Dual Voltage Switch set in wrong position.	6. Recheck line voltage and set Dual Voltage Switch to proper position "115" or "230".
5. Motor continues to run when speed control knob is set to 0.	1. Min. speed trimpot not set to full CCW position.	1. Readjust min. trimpot.
	2. IR comp trimpot set too high.	2. Lower IR comp trimpot setting.
6. Motor runs in wrong direction.	1. Armature leads reversed.	1. Reconnect armature leads.

The following portion of the Troubleshooting Guide refers only to controllers that have the FWD-BRK-REV switch option.

SYMPTOM	POSSIBLE CAUSE	CORRECTIVE ACTION
1. Motor will not run in either forward or reverse direction.	1. Faulty wiring or loose connections to reversing switch.	1. Correct wiring (see internal wiring diagram).
	2. Defective FWD-BRK-REV switch.	2. Replace switch assembly.
2. No braking action in brake mode.	1. Faulty wiring or loose connection.	1. Correct wiring.
	2. Faulty FWD-BRK-REV switch.	2. Replace switch assembly.
	3. Defective Brake Resistor.	3. Replace resistor.

SECTION VI. (A) INTERNAL WIRING DIAGRAMS

1. BASIC MULTI-DRIVE®

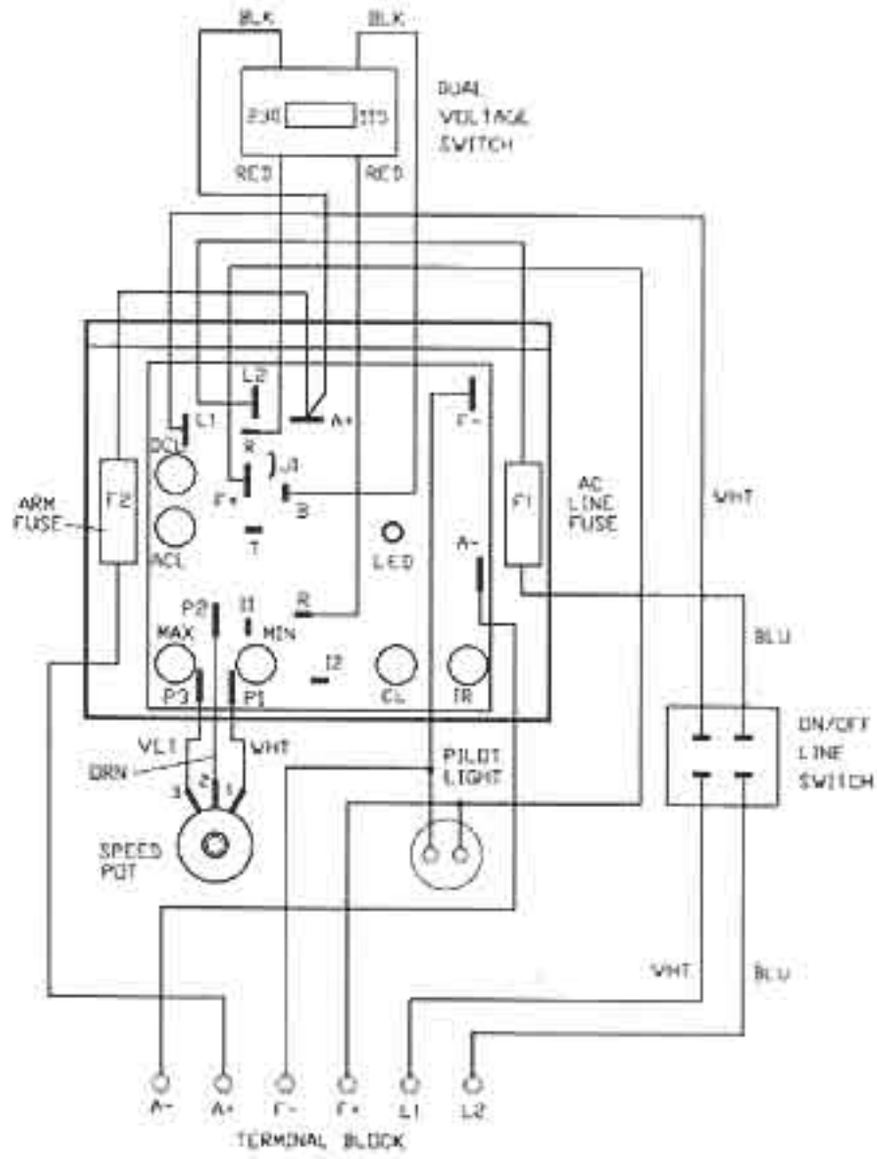

2. FORWARD-BRAKE-REVERSE SWITCH (OPTIONAL)

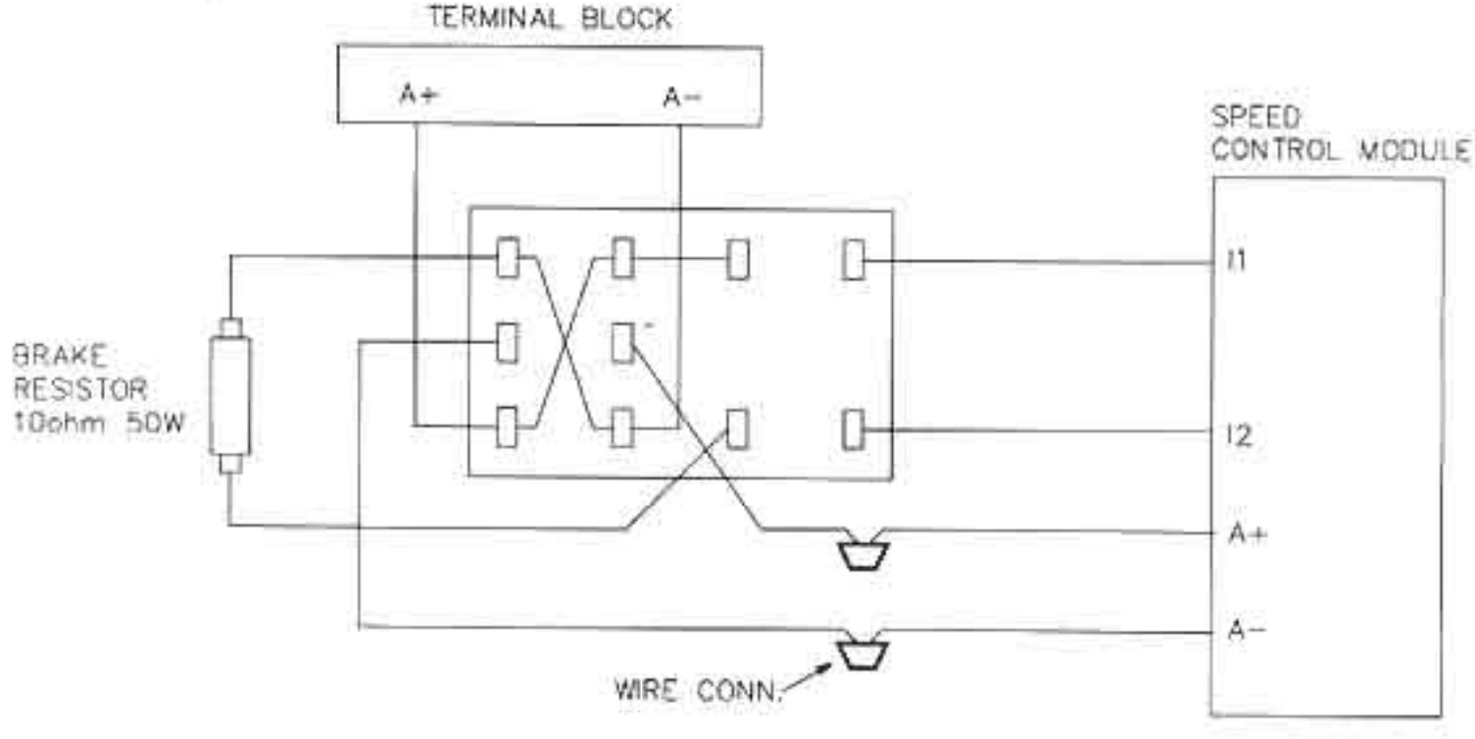

Honeywell

S437A,B, S637A Sail Switches

PRODUCT DATA

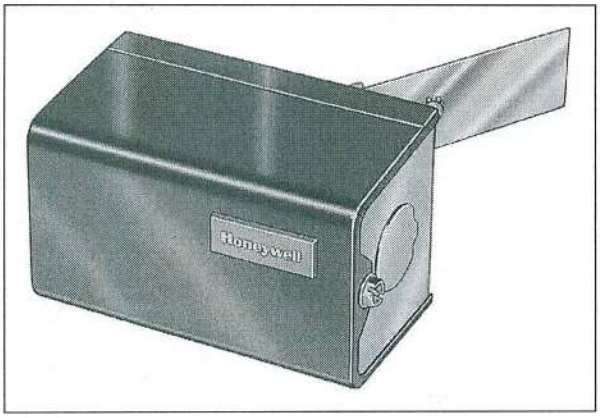

APPLICATION

The S437 and S637 Sail Switches respond to the air velocity in heating or warm air ducts, such as used in farm crop dryers. The switch completes a 24 V or line voltage burner control circuit only when the blower or fan has produced a predetermined air velocity.

FEATURES

- **Micro Switch snap switch is operated by metal sail inserted in an air stream. (S437 switch is spst, S637 switch is spdt.)**
- **S637 has a set of normally closed contacts which can be used to energize a signal or warming circuit when the velocity drops off.**
- **Sail can be trimmed to one-half the original size to double the velocity required to close the snap switch contacts.**
- **Switch differential can be manually adjusted by turning a knurled knob on the snap switch.**
- **A conduit knockout is located on each end of the case for wiring convenience.**

SPECIFICATIONS

Mounting Position: Velocity characteristics listed apply when standard size sail is inserted in a horizontal air stream with the sail pivot in a vertical position. Vertical mounting with air movement upward is satisfactory; however, characteristics will change. Device cannot be vertically mounted with downward air movement.

Mounting Means: Case screw-mounts to duct wall with sail inserted through wall into air stream.

Mounting Dimensions: Refer to Fig 1.

Sail Size: Standard - 1 x 3 in. (25 x 76 mm).
Large - 1 1/2 x 4 in. (38 x 102 mm).

Contents

Application 1
Features 1
Specifications 1
Ordering Information 2
Installation 3
Wiring 3
Checkout 3

60-2186—2

MODEL NO.	INCLUDES CASE AND COVER	SWITCHING ACTION ON INCREASING VELOCITY	SWITCHING ACTION ON DECREASING VELOCITY	SWITCH DIFFERENTIAL
S437A	YES	Spst. Normally open contacts close at 1900-2250 fpm (9.7 - 11.4 m/s). Varies directly with differential setting.	Switch de-energizes at 1350 fpm (6.9 m/s). Not adjustable.	Adjustable, 550-900 fpm (2.8 - 4.6 m/s)
S437B	NO			
S637A	YES	Spst. One set of contacts opens, one set closes at 1900-2250 fpm (9.7 - 11.4 m/s). Varies directly with differential setting	One set of contacts opens to de-energize blower, one set closes to energize warming circuit at 1350 fpm (6.9 m/s). Not adjustable.	

Maximum Ambient Temperature: 150° F (66° C).

Insertion Length: Standard - 3 1/2 in.(89 mm).
Large - 4 1/2 in. (114 mm).

Switch Contact Rating (amperes):

	120 Vac	240 Vac
Full Load	8	5.1
Locked Rotor	48	30.6

2 A at 24 Vac.
15 A at 6 Vac.
7.5 A at 12 Vdc.

Cover Finish: Red enamel.

Underwriters Laboratories Inc. Listed:
S437A, S637A - File No. MP2169, Vol. 2 dated 5-11-59; Guide No. MFHX.
S437B - File No. MP2168, Vo. 2 dated 5-11-59; Guide No. MFHX2 (Component Recognized).

Canadian Standards Association Certification: Listed S, File No. LR95329, Class 481302.

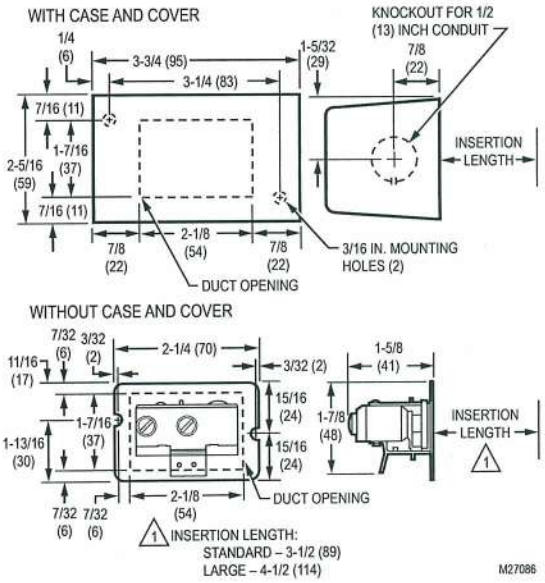

Fig. 1. S437 Dimensions in in. [mm in Brackets].

ORDERING INFORMATION

When purchasing replacement and modernization products from your TRADELINE® wholesaler or distributor, refer to the TRADELINE® Catalog or price sheets for complete ordering number.

If you have additional questions, need further information, or would like to comment on our products or services, please write or phone:

1. Your local Honeywell Automation and Control Products Sales Office (check white pages of your phone directory).
2. Honeywell Customer Care
   1885 Douglas Drive North
   Minneapolis, Minnesota 55422-4386

In Canada—Honeywell Limited/Honeywell Limitée, 35 Dynamic Drive, Toronto, Ontario M1V 4Z9.
International Sales and Service Offices in all principal cities of the world. Manufacturing in Australia, Canada, Finland, France, Germany, Japan, Mexico, Netherlands, Spain, Taiwan, United Kingdom, U.S.A.

INSTALLATION

When Installing this Product...

1. Read these instructions carefully. Failure to follow them could damage the product or cause a hazardous condition.
2. Check the ratings given in the instructions and on the product to make sure the product is suitable for your application.
3. Installer must be a trained, experienced service technician.
4. After installation is complete, check out product operation as provided in these instructions.

⚠ CAUTION

Disconnect power supply before connecting wiring to prevent electrical shock and equipment damage.

Mounting

Plan the location so that the sail will be in the direct path of an unrestricted air stream. A horizontal duct run is best because the sail will then move horizontally. In a vertical duct, the effect of gravity on the linkage changes the operating characteristics somewhat.

1. At the desired location, cut a rectangle hole 1-1/2 x 2 in. See dotted lines in dimension drawing.
2. Note direction of air stream and position chassis as a template to make the two mounting hole locations.
3. Center punch and drill mounting holes. Secure device with sheet metal screws.

WIRING

Disconnect power supply before making wiring connections to avoid possible electrical shock or equipment damage. All wiring must agree with local codes and ordinances.

Wire the sail switch in series with the load to act as an air velocity limit switch.

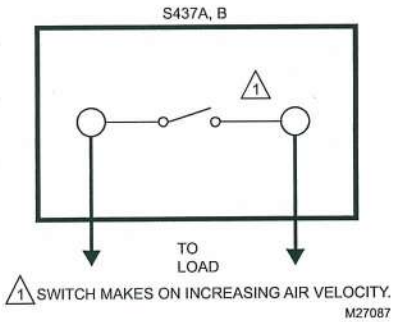

Fig. 2. S437 Schematic and Typical Connections

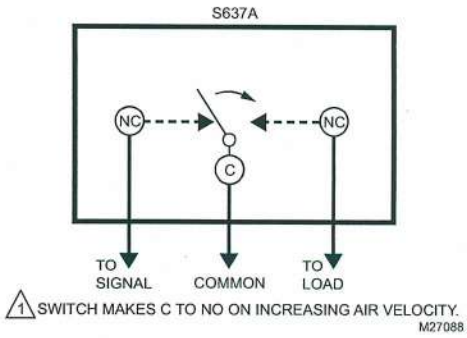

Fig. 3. S637 Schematic and Typical Connections.

Set Differential

The knurled wheel at the base of the switch is marked with the letters A, B, C, D to indicate relative differentials from minimum to maximum. Follow instructions of system manufacturer, if available, or adjust to suit actual operation.

A minimum differential setting (position A) of approximately 550 fpm (2.8 m/s) results in a make velocity of approximately 1900 fpm (9.7 m/s). The break velocity is 1350 fpm (6.9 m/s) for any setting of the differential.

Sail Size

All velocities given above are for a standard size sail. The large sail operates the switch at reduced velocities.

To control at higher velocities, the size of the sail must be reduced in inverse proportion.

Example: 2 x velocity = 1/2 sail size.

CHECKOUT

Operate the system through at least one complete cycle to make certain all equipment is controlled properly.

Automation and Control Solutions

Honeywell International Inc.
1985 Douglas Drive North
Golden Valley, MN 55422
customer.honeywell.com

Honeywell Limited-Honeywell Limitée
35 Dynamic Drive
Toronto, Ontario M1V 4Z9

® U.S. Registered Trademark
© 2007 Honeywell International Inc.
60-2186—2 J.I. Rev. 10-07

Printed in U.S.A. on recycled paper containing at least 10% post-consumer paper fibers.

Honeywell

Honeywell

Series 71, 72, and 76 Modutrol IV™ Motors

PRODUCT DATA

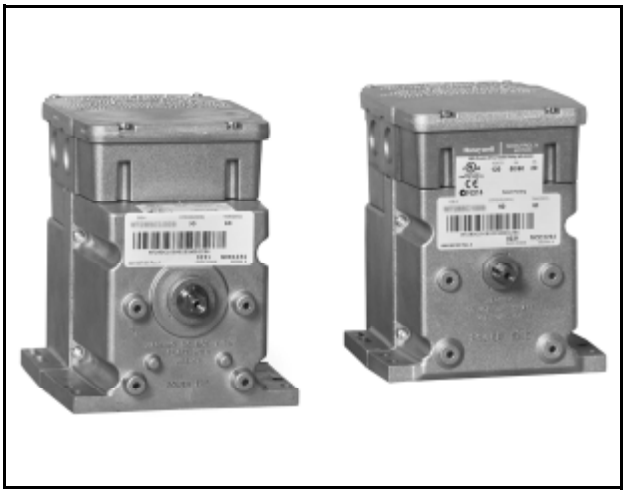

APPLICATION

The Series 71, 72 and 76 Modutrol IV Motors are spring return and non-spring return motors used to control dampers and valves. The motors accept a current or voltage signal from an electronic controller to position a damper or valve at any point between open and closed.

FEATURES

- **Replaces M734H,J,; M744S,T,Y; and M745L,S,T,Y Motors.**
- **M7164, M7261, M7284, and M7294 are non-spring return motors; M7282, M7285, M7286 and M7685 are spring return motors.**
- **Integral spring return returns motor to normal position when power is interrupted.**
- **Integral junction box provides NEMA 3 weather protection.**
- **Motor and circuitry operate from 24 Vac. Models available with factory installed transformer, or a field added internal transformer.**
- **Quick-connect terminals are standard—screw terminal adapter is available.**
- **Adapter bracket for matching shaft height of older motors is available.**
- **Most motors have field adjustable stroke (90° to 160°).**
- **Die-cast aluminum housing.**
- **Integral auxiliary switches are available factory mounted, or can be field added.**
- **Nominal timing standard of 30 seconds (90° stroke), and 60 seconds (160° stroke). Other timings available.**
- **Spring return motors can operate valve linkages from power end or auxiliary end shafts for normally closed or normally open valve applications.**
- **All models have dual shafts (slotted and tapped on both ends).**
- **All models have auxiliary switch cams.**
- **Fixed torque throughout the entire voltage range.**
- **Motors are designed for either normally open or normally closed valves and dampers.**
- **Models available with adjustable start (zero) and span.**
- **Models available with 4 to 20 mA input signal.**
- **Models available with 2 to 10 Vdc input signal.**

Contents

Application 1
Features 1
Specifications 2
Ordering Information 2
Installation 5
Settings and Adjustments 8
Operation and Checkout 11

63-2640-08

SPECIFICATIONS

Models: TRADELINE models are selected and packaged to provide ease of stocking, ease of handling and maximum replacement value. TRADELINE model specifications are the same as those of standard models unless specified otherwise.

IMPORTANT

The specifications given in this publication do not include normal manufacturing tolerances. Therefore, an individual unit may not exactly match the listed specifications. Also, this product is tested and calibrated under closely controlled conditions and some minor differences in performance can be expected if those conditions are changed.

Modutrol IV Order Number Guide: See Table 4.

Dimensions: See Fig. 2.

Lifetime
60,000 Full Stroke Cycles
Repositions: 1.5 Million

Controller: These motors can be used with any electronic controller that provides a stable noise-free proportional current output as specified in Electrical Ratings, Input Range below.

Electrical Ratings:
Power Consumption: See Table 1.
Input Range:
- Current, Nonadjustable: 4 to 20 mA nominal, 25 mA maximum.
- Current, Adjustable: 4 to 20 mA adjustable, 50 mA maximum.
- Zero/Null (Motor Closed): 0.0 to 18 mA.
- Span: 1.8 to 20 mA.
- Voltage, Nonadjustable: 2 to 10 Vdc.

Input Impedance:
- 4 to 20 mA Input: 100 ohms.
- 2 to 10 Vdc Input: 400K ohms.

Auxiliary Switch Ratings (in Amps): See Table 2.

Stroke: Most models available with field adjustable strokes from 90° to 160°. Stroke adjusted by means of potentiometers located in the wiring compartment.

Timing: Nominal 30 seconds for 90° stroke and 60 seconds for 160° stroke.

Dead Weight Load On Shaft: 200 lb (91 kg) on motor power or auxiliary end; maximum combined load of 300 lb (136 kg).

Ambient Temperature Ratings: -40 to 150°F (-40 to 66°C).

Shaft: 3/8 in. (9.5 mm) square.

Motor Rotation:
Closed: Counterclockwise rotation limit as viewed from motor power end.
Mechanically Normally Closed: Spring return. Normally closed motors rotate to closed position on power loss.
Electrically Normally Closed: Both spring return and non-spring motors return to closed position on minimum signal.

Table 1. Series 72 Modutrol IV Motor Power Consumption Ratings (at 120 Vac, 50/60 Hz).

Model	Power Consumption	
	VA	Watts
M7261	15	13
M7282	20	18
M7284	15	13
M7285	20	18
M7286	20	18
M7294	15	13

Table 2. Auxiliary Switch Ratings (in Amps).

One Contact Rating[a]	120V	240V
Full Load	7.2	3.6
Locked Rotor	43.2	21.6

[a] 40 VA pilot duty, 120/240 Vac on opposite contact.

Approvals:
Underwriters Laboratories Inc. Listed: File No. E4436; Guide No. XAPX for USA and Canada.
U.S. Patents: pending

Table 3. Primary 50017460-001 Color Code

Lead Color	Primary Voltage
Brown	24 VAC
White	120 VAC
Blue	230 VAC
Black	Common

ORDERING INFORMATION

When purchasing replacement and modernization products from your TRADELINE® wholesaler or distributor, refer to the TRADELINE® Catalog or price sheets for complete ordering number. If you have additional questions, need further information, or would like to comment on our products or services, please write or phone:

1. Your local Honeywell Environmental and Combustion Controls Sales Office (check white pages of your phone directory).
2. Honeywell Customer Care
   1885 Douglas Drive North
   Minneapolis, Minnesota 55422-4386
3. http://customer.honeywell.com or http://customer.honeywell.ca

International Sales and Service Offices in all principal cities of the world. Manufacturing in Belgium, Canada, China, Czech Republic, Germany, Hungary, Italy, Mexico, Netherlands, United Kingdom, and United States.

Fig. 1. Stroke

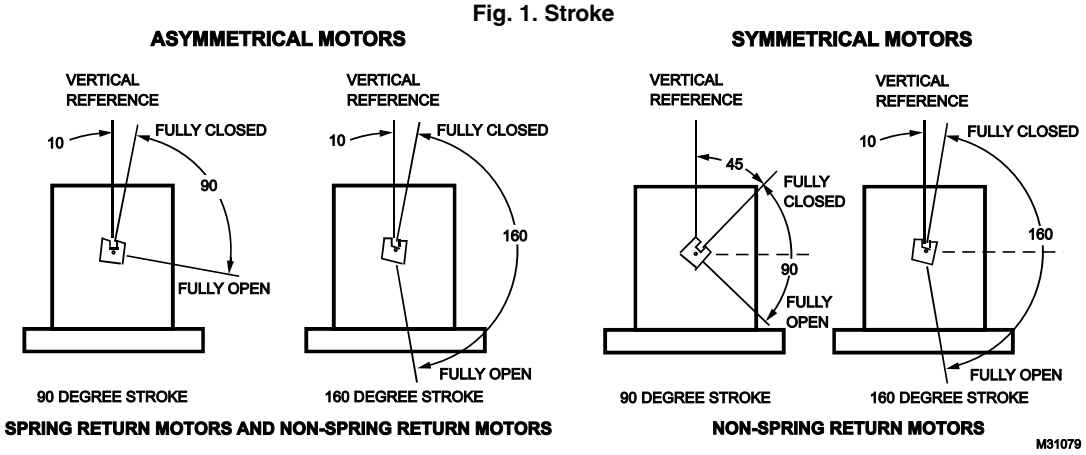

Table 4. Modutrol IV Motors Series 2 and 3 Model Number Guide.

M	Motor						
	71	10.5 - 13.5 Vdc voltage input					
	72	4-20 mA or 2-10 Vdc Control					
	76	14-17 dc voltage control with minimum position capability					
		6	—		35 lb-in. Non-Spring Return		
		7	—		75 lb-in. Non-Spring Return		
		8	60 lb-in. Spring Return		150 lb-in. Non-Spring Return		
		9	—		300 lb-in. Non-Spring Return		
			2	Dual-ended shaft		Normally Closed Spring Return	
			4			Non-Spring Return	
			5			Normally Closed Spring Return	
				A	0 Auxiliary Switches	Adjustable Stroke *	Normally Closed
				B	1 Auxiliary Switch		
				C	2 Auxiliary Switches		
				D	0 Auxiliary Switch		
				Q[a]	2 Auxiliary Switches		

M	**72**	**8**	**4**	**A**	**XXXX**	See Tradeline Catalog for Complete Model Number

[a] Adjustable zero and span.
* Fixed stroke on M7284C1083, M7284C1091, M7284Q1082, and M7284Q1090

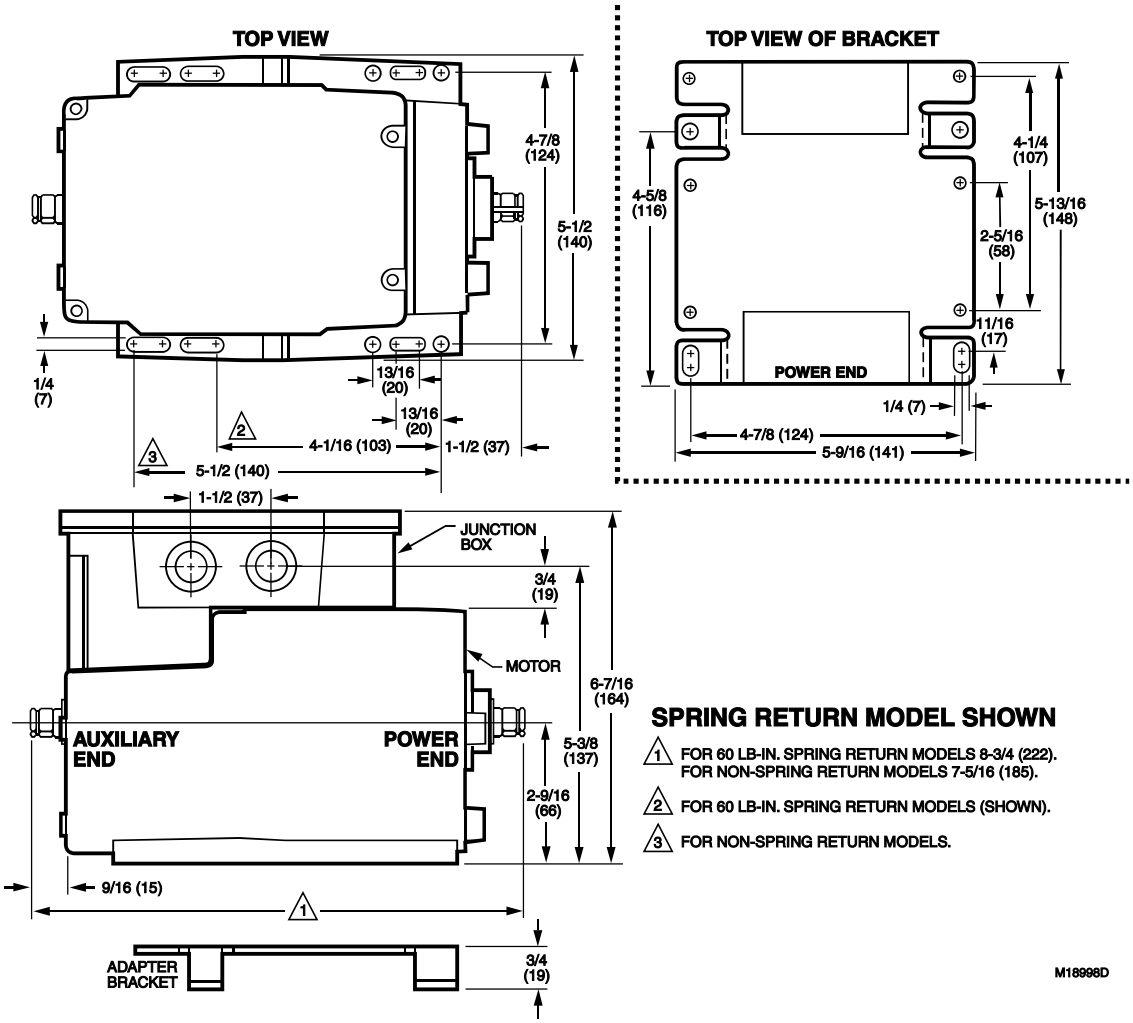

Fig. 2. Series 72 Modutrol IV Motor dimensions in inches (mm).

Accessories:

220736A Internal Auxiliary Switch Kit; one switch. Can be field-installed.

220736B Internal Auxiliary Switch Kit; two switches, can be field-installed on TRADELINE models.

220738A Adapter Bracket raises motor shaft height by 3/4 in (19 mm) to match that of previous Modutrol Motor models.

220741A Screw Terminal Adapter converts the standard quick-connect terminals to screw terminals.

221455A Infinitely Adjustable Crank Arm, can rotate through downward position and clear motor base without requiring an adapter bracket.

4074ERU Weatherproofing Kit provides NEMA 3 rating for Modutrol IV Motors mounted in position other than upright.

50017460-001 Internal Transformer; 24/120/230 Vac 50/60 Hz primary, 24 Vac secondary, quick connect terminals.

50017460-003 Internal Transformer; 120 Vac 50/60 Hz primary, 24 Vac secondary, quick connect terminals.

7617ADW Crank Arm, can rotate through downward position and clear motor base without requiring an adapter bracket.

Q100 Linkage connects Modutrol Motor to V51 Butterfly Valve. Requires the 220738A Adapter Bracket.

Q181 Auxiliary Potentiometer for sequence or unison control of 1 to 4 additional modulating (Series 90) motors.

Q209E,F Manual Potentiometer for Modutrol Motors

Q5001 Bracket and Linkage Assembly connects Modutrol IV Motor to water or steam valve.

Q605 Damper Linkage connects motor to damper. Includes motor crank arm.

Q607 External Auxiliary Switch controls auxiliary equipment as a function of motor position.

ES650-117 Explosion-Proof Housing encloses motor for use in explosive atmospheres. Also required, a 7617DM coupling assembly from Honeywell to use with the cover. Not for use with Q5001 (or any other valve linkages). To order ES650-117, contact EGS Enclosures at (281) 449-6271, ask for the sales department and for distribution in your area.

INSTALLATION

When Installing this Product...

1. Read these instructions carefully. Failure to follow them could damage the product or cause a hazardous condition.
2. Check the ratings given in the instructions and on the product to make sure the product is suitable for your application.
3. Installer must be a trained, experienced service technician.
4. After installation is complete, check out product operation as provided in these instructions.

⚠ CAUTION

Electrical Shock or Equipment Damage Hazard.
Can shock individuals or short equipment circuitry.
Disconnect all power supplies before installation. Motors with auxiliary switches can have more than one disconnect.

⚠ CAUTION

Equipment Damage Hazard.
Can damage the motor beyond repair.
Never turn the motor shaft by hand or with a wrench. Forcibly turning the motor shaft damages the gear train and stroke limit contacts.

IMPORTANT

Always conduct a thorough checkout when installation is complete.

Location

Allow enough clearance for accessory installation and motor servicing when selecting a location (see Fig. 2). If located outdoors, use liquid-tight conduit connectors with the junction box to provide NEMA 3 weather protection. If mounted outdoors in a position other than upright, install a 4074ERU Weatherproofing Kit and liquid-tight connectors to provide NEMA 3 protection.

⚠ CAUTION

Motor Damage Hazard.
Deteriorating vapors and acid fumes can damage metal parts.
Install motor in areas free of acid fumes and other deteriorating vapors.

In excessive salt environments, mounting base and screws should be zinc or cadmium plated, not stainless steel or brass. Use the 220738A Adapter Bracket for mounting on these surfaces.

Mounting

Use the following guidelines for proper motor mounting:

- Always install motors with the crankshaft horizontal.
- Mounting flanges extending from motor housing base are drilled for 1/4 inch (6.4 mm) machine screws or bolts.
- Non-Spring Return Motors are shipped from the factory in the closed position (at the counterclockwise rotation limit, as viewed from the motor power end).
- Spring Return Motors are shipped from the factory in their normal position.
- Normally closed models are shipped at the counterclockwise rotation limit, as viewed from the motor power end.

Adapter Bracket

The 220738A Adapter Bracket, positioned between the motor and the equipment, raises motor shaft height by 0.75 in. (19 mm) to match that of previous Modutrol Motor models.

The following applications require this bracket:

- Q607 External Auxiliary Switch.
- Damper linkage applications requiring added clearance to allow:
  - — Crank arm rotation through the downward position.
  - — Sufficient damper linkage to reach the motor shaft.
- All valve linkages except the Q5001.

NOTE: When the bracket is not used in a replacement application, the damper linkage requires adjustment for the new shaft position.

To mount the motor with the bracket:

1. Mount the bracket to the equipment with existing or standard bolts.
2. Using the provided bolts, mount the motor to the bracket threaded holes. See Fig. 3.

For valve linkage applications (other than the Q5001):

1. Mount the bracket to the linkage.
2. Position the motor on the bracket to align the motor shaft with the linkage.

3. Attach the motor to the bracket with the four bolts provided. See Fig. 4.

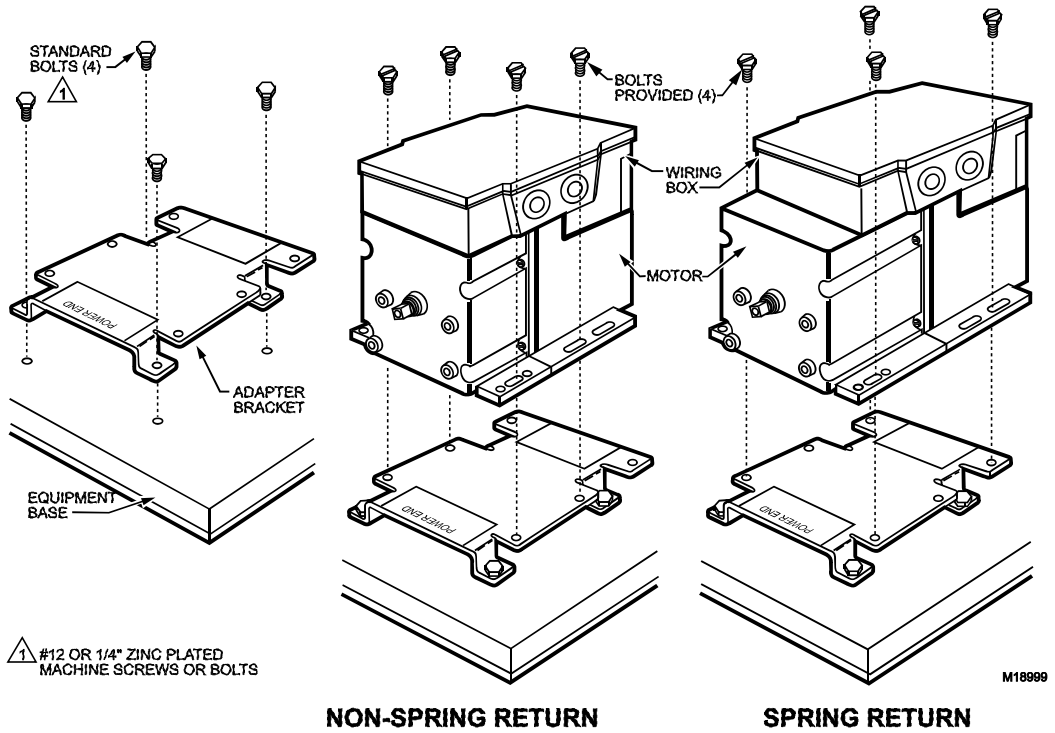

Fig. 3. Mounting the motor with an adapter bracket.

Damper Linkages

The motor does not include a crank arm. Order the crank arm separately (see Accessories in the Specifications section). For detailed instructions on the assembly of specific linkages, refer to the Installation Instructions packed with the linkage.

CAUTION

Equipment Damage Hazard.
Stalling a motor can damage the drive shaft.
Ensure installation of motors and linkages allows the motor to drive through full stroke without obstruction.

Valve Linkages

The Q100 Linkage requires a 220738A Adapter Bracket for all valve applications. Applications with the Q5001 Valve Linkage do not require the 220738A Adapter Bracket (see Fig. 4).

For detailed instructions on specific linkage assemblies, refer to the instruction sheet packed with the linkage. In general, check the following points when installing a motor and linkage:

- Adjust valve and louver-type damper linkages so the damper or valve moves through only the maximum required distance while the motor moves through its full stroke.
- With modulating control, maximum damper opening should be no more than 60 degrees. Little additional airflow is provided beyond this point.
- Do not exceed load and torque ratings in any application.

Junction Box

When used with liquid-tight conduit connectors, the junction box provides NEMA 3 weather protection for the motor. The junction box, standard with replacement motors, encloses the terminals and provides knockouts for wiring conduits. Housing an internal transformer or internal auxiliary switches requires using a junction box.

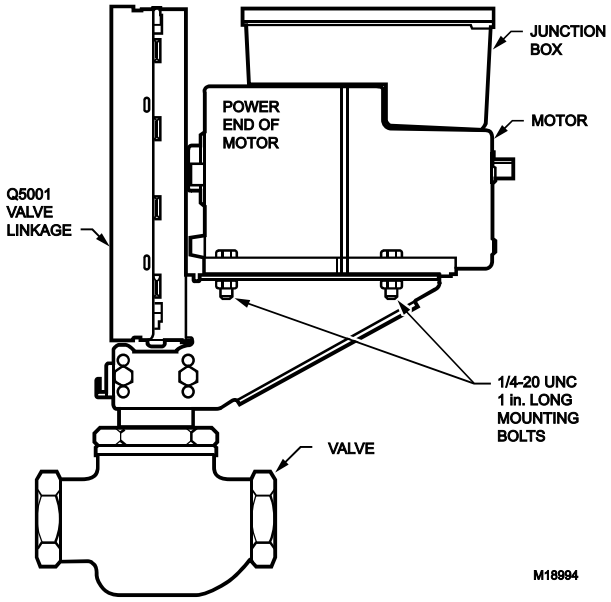

Fig. 4. Mounting the motor on a Q5001 Valve Linkage.

Wiring

CAUTION

Electrical Shock or Equipment Damage Hazard.
Can shock individuals or short equipment circuitry.
Disconnect all power supplies before installation.
Motors with auxiliary switches can have more than one disconnect.

IMPORTANT

All wiring must agree with applicable codes, ordinances and regulations.

1. Ensure that the voltage and frequency stamped on the motor correspond with the power supply characteristics.
2. When connecting several motors in parallel, ensure that the power supply VA rating is large enough to provide power to all motors used without overloading.
3. Fig. 10 shows that motor terminals are quick-connects located on top of the printed circuit board.
4. To access the wiring compartment:
   a. Remove the four screws from the junction box top.
   b. Lift off the cover.
5. Refer to Fig. 5 through 8 for wiring.

Wire the motor as follows:

1. Remove the wiring box cover by removing the four screws holding the cover to the motor.
2. Wire motor to system using quick-connect terminals in wiring box.
3. Replace wiring box cover.

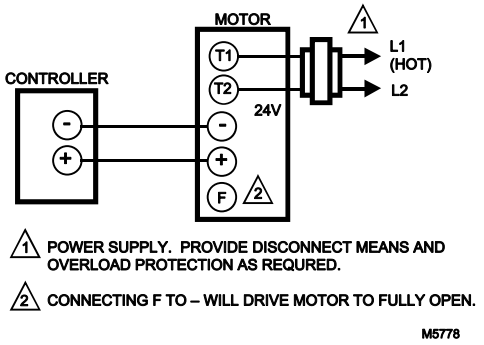

Fig. 5. Typical system wiring.

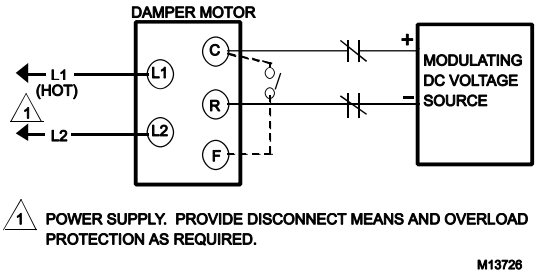

Fig. 6. Series 71 optional override switches to drive motor open or closed.

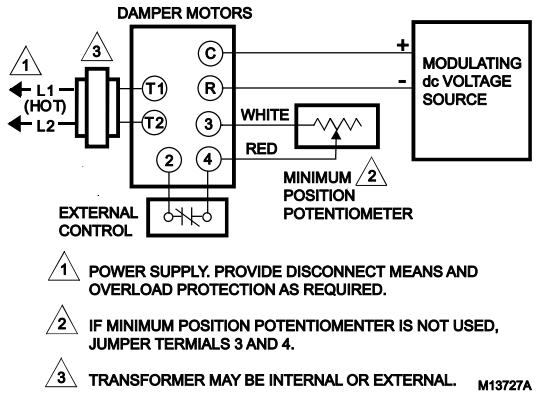

Fig. 7. M7685 Typical application wiring.

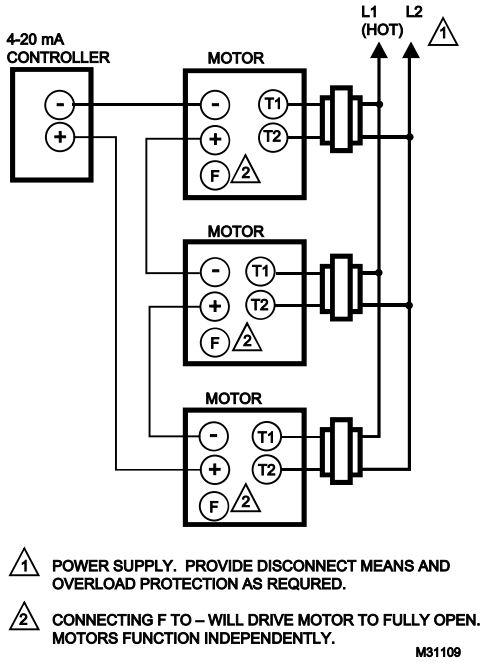

Fig. 8. Driving up to six motors from one 4 to 20 mA controller.

SETTINGS AND ADJUSTMENTS

Before Setting Stroke

1. Remove the top cover from the motor.
2. Disconnect the controller from the motor.
3. For models with an internal transformer (line voltage motors), ensure that power (and nothing else) remains connected to the motor.

IMPORTANT

Detach linkage from motor before adjusting stroke.

CAUTION

Careless Installation Hazard.
Use of excessive force while adjusting cams damages the motor.
To avoid damaging motor end switches, set cams by moving only the screwdriver top.

CAUTION

Equipment Damage Hazard.
Can damage the motor beyond repair.
Never turn the motor shaft by hand or with a wrench. Forcibly turning the motor shaft damages the gear train and stroke limit contacts.

Adjustable Stroke

All models except for M7284C1083, M7284C1091, M7284Q1082, and M7284Q1090.

When viewing from the power end of the motor, the stroke potentiometer is to the far left. To set the stroke to 160° (maximum position) turn the potentiometer fully clockwise , using a 1/8 in. straight-blade screwdriver. To set the stroke at 90° (minimum position) turn the potentiometer fully counter-clockwise . Setting the potentiometer anywhere between fully clockwise and fully counter-clockwise will set the stroke between 160° and 90°.

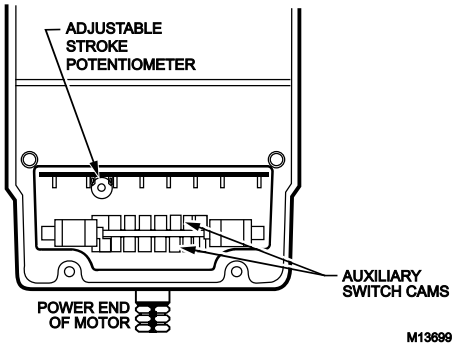

Fig. 9. Stroke adjustment setup

Zero and Span Adjustment for M7284Q, M7285Q, and M7294Q

M7284Q, M7285Q, and M7294Q actuators have the capability of adjustable zero and span. Fig. 10 shows the module with the zero and span potentiometers.

Zero: Sets input voltage to define the 0% angle of rotation. It is factory set to minimum position and can be adjusted to the maximum position of 20mA or 10V.

Span: Adjusts motor response to travel a full stroke through the selected input span. It is factory set to maximum position, and is adjustable from 4-20mA or 2-10Vdc.

1. Adjust the start potentiometer fully clockwise (maximum zero) and the span potentiometer fully counterclockwise (minimum span). See Fig. 10.
2. Set the controller current to the value required to drive the motor to the closed position.
3. Turn the start potentiometer slowly counterclockwise until the motor begins to open. This is defined as the start or zero setting.
4. Set the controller current to the value required to drive the motor to the fully open position. The motor will open.
5. Turn the span potentiometer clockwise until the motor starts to close. The difference between the fully open span position current and the zero position current is defined as the operating span.
6. Recheck the start and readjust the span potentiometer if necessary. Turn the start potentiometer clockwise to increase the zero position.
7. Recheck the span and readjust the span potentiometer if necessary. Turn it clockwise to increase the full span position.
8. For sequential operation, as shown in Fig. 11, repeat the above steps for each motor.

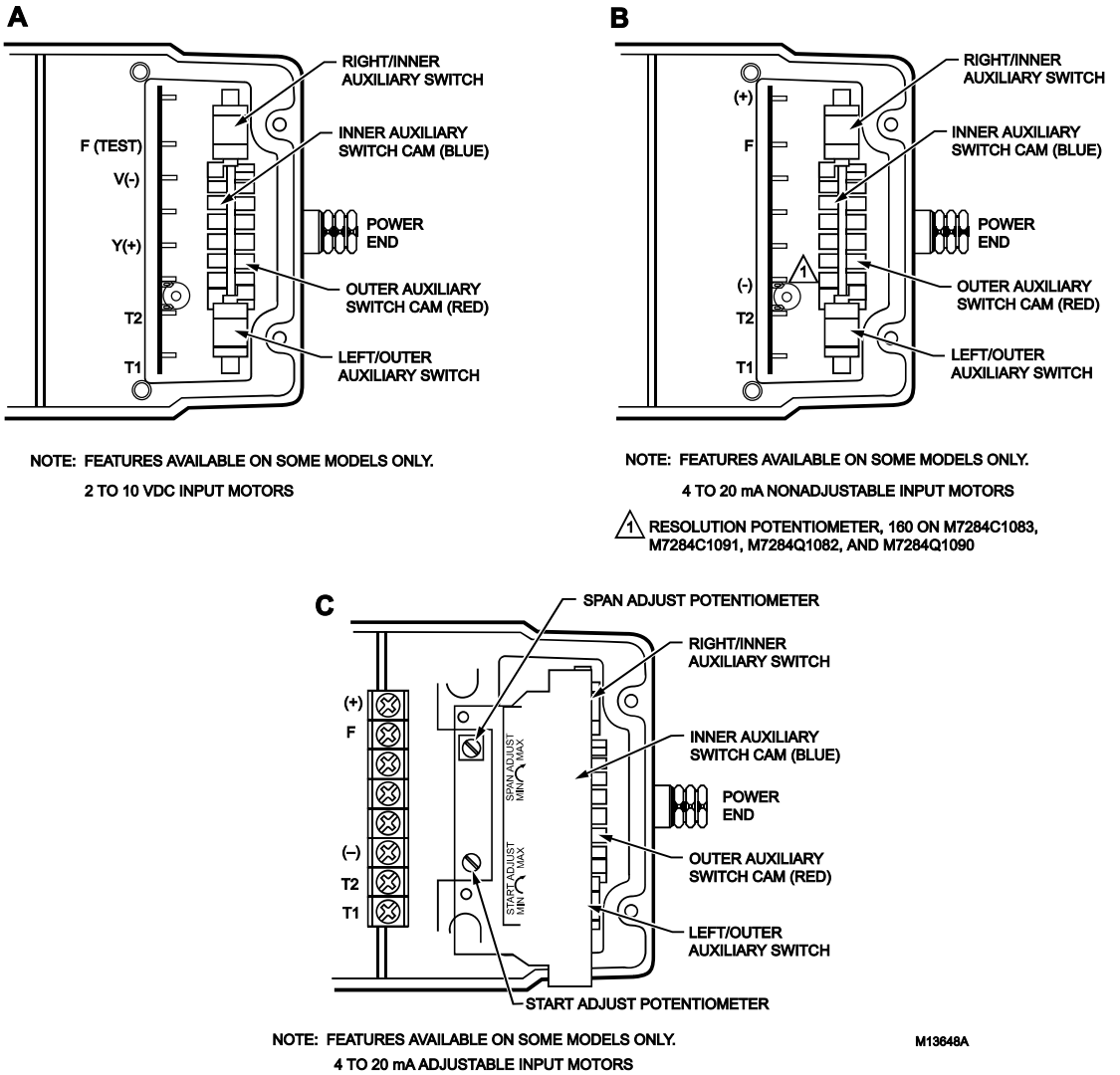

Fig. 10. Terminals and adjustments.

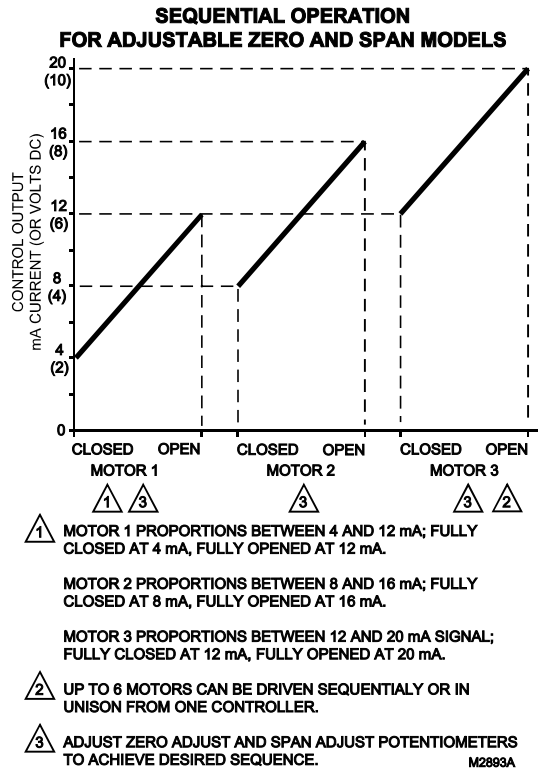

Fig. 11. Sequential operation of motors.

Enhanced Resolution M7284C1083, M7284C1091, M7284Q1082, and M7284Q1090

These four motors have enhanced resolution with 160 repositions (steps) from 90 degrees to 160 degrees stroke.

Auxiliary Switches

CAUTION
Electrical Shock or Equipment Damage Hazard. Can shock individuals or short equipment circuitry.
Disconnect all power supplies before installation. Motors with auxiliary switches can have more than one disconnect.

CAUTION
Equipment Damage Hazard.
Can damage the motor beyond repair.
Never turn the motor shaft by hand or with a wrench. Forcibly turning the motor shaft damages the gear train and stroke limit contacts.

Adjustable cams actuate the auxiliary switches. These cams can be set to actuate the switches at any angle within the motor stroke. Select switch differential of 1° or 10°.

Motors with factory added auxiliary switches are shipped in the closed position (fully counterclockwise, as viewed from the motor power end) with auxiliary cams set to actuate switches 30° from the closed position and to provide 1° degree differential. With the motor in the closed (fully counterclockwise) position, the auxiliary switch breaks contacts R-B. See Fig. 12 for auxiliary switch wiring.

Series 2 Motors are shipped with auxiliary switch cams that permit acceptance of 220736A,B Internal Auxiliary Switch Kits. Refer to form 63-2228 for 220736A,B Installation Instructions.

Auxiliary Switch Adjustment

IMPORTANT

When adjusting the auxiliary switch cams use the following procedure:

1. *Insert 1/8 in. screwdriver blade into a slot on cam and move the screwdriver top as far as possible in the required direction. See Fig. 12.*
2. *Repeat step 1 in successive cam slots until the cam is in the required position.*

NOTE: Series 2 Motors are shipped with auxiliary switch cams that permit acceptance of 220736A,B Internal Auxiliary Switch Kits. Refer to Form no. 63-2228 for 220736A,B Installation Instructions.

Use the following procedure to obtain the desired auxiliary switch settings:

1. Remove the top cover from the motor to gain access to the motor terminals and auxiliary cams.
2. Disconnect the controller from the motor.
3. Connect a current source to the positive and negative terminals.
4. Drive the motor to the position where the auxiliary equipment is to be switched by increasing or decreasing the current.
5. For a switch differential of 1°, check continuity of auxiliary switch contacts R-B and rotate the cam as follows:
   a. If the contacts are open, rotate the cam clockwise until the R-B contacts close.
   b. If the contacts are closed, rotate the cam counterclockwise until the R-B contacts open.
6. For a switch differential of 10° rotate the cam approximately 180° so the slow-rise portion of the cam actuates the switch.
7. Check continuity of the auxiliary switch contacts R-B.
8. Rotate the cam as follows:
   a. If the contacts are open, rotate the cam counterclockwise until the R-B contacts close.
   b. If the contacts are closed, rotate the cam clockwise until the R-B contacts open.
   c. Make final adjustment in the proper direction to obtain contact make or break at the desired position.
9. Check for the proper differential and switching of the auxiliary equipment by driving the motor though the full stroke in both directions.
10. Disconnect power, remove current source, reconnect the controller, and replace the top cover on the motor.

NOTE: Changing the differential from 1° to 10° reverses the switching action. For example, with a 10° differential, switch contacts R-B make and R-W break on a counterclockwise (closed) rotation. With a 1° differential, switch contacts R-W make and R-B break on a counterclockwise (closed) rotation.

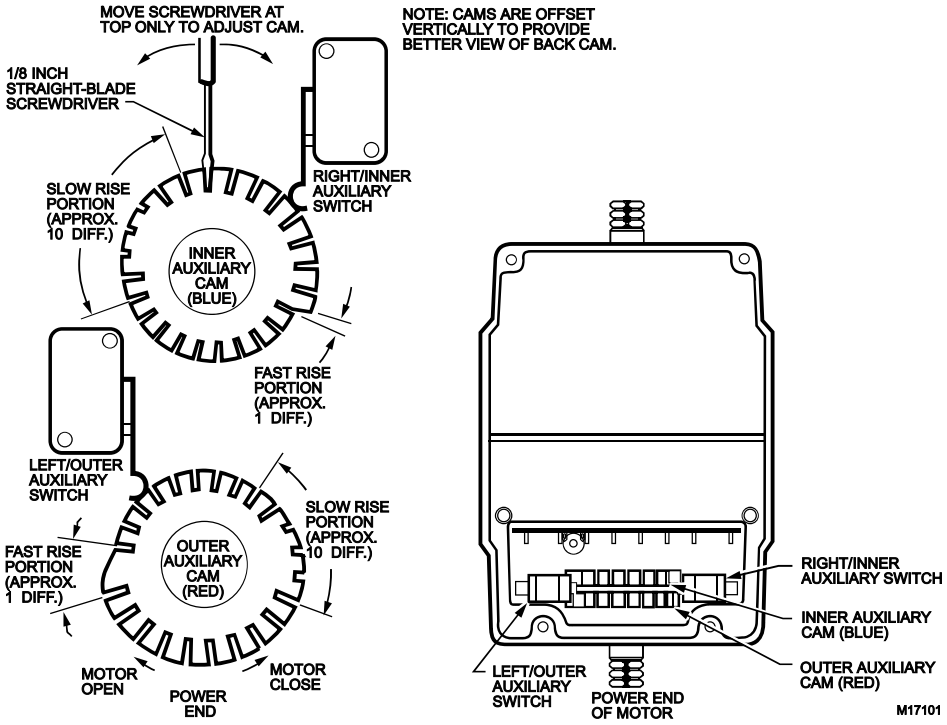

Fig. 12. Auxiliary switch adjustment.

OPERATION AND CHECKOUT

Operation

The internal shaft position feedback potentiometer in conjunction with the actuator microprocessor and modulating input circuit form a control loop. When the external controller's output remains at a fixed amplitude the actuator's shaft position is held at a position proportional to that input amplitude. When the value of the external controllers output changes the actuator responds by initiating movement of the motor to proportionately compensate for the change in input amplitude. When the motor reaches the control loop balance point the system is again in a static state and the actuator holds position until the next change of input from the external controller.

M7685 motor also have a minimum position feature. An external 130 ohm potentiometer wired to terminals 3 and 4 establishes a position beyond which the control input cannot close the motor. If power to the T1-T2 is interrupted the M7685 motor will spring close.

Checkout

After installation and linkage adjustment, operate the motor through the controller. Make sure that:

- The motor properly operates the damper or valve.
- The motor responds properly as the input is varied.
- The auxiliary switch, if used, operates at the desired point of motor rotation.

Inspect the motor, linkage, and valve or damper to see that all mechanical connections are correct and secure.

In damper installations, the pushrod should not extend more than a few inches past the ball joints. Check to see that there is adequate clearance for the linkage to move through its stroke without binding or striking other objects.

See controller or system instructions for additional checkout procedures.

Motor Operation Checkout

For motors with F, + and - terminals:
To close the motor, open terminals +, -, and F.
To open the motor connect terminal F to positive (+) or negative (-).
NOTE: DO NOT SHORT + to -

M7164A1017 and M7164G1030 do not have + or – terminals, and operate as follows:
The motor closes if it does not receive an input to F.
To open the motor, short F to C.

M7685A1025 is a normally open motor, and operates as follows:
To close the motor, short 3 to 4 or short 3 to C.
The motor opens if it does not have an input to 3.

Automation and Control Solutions
Honeywell International Inc.
1985 Douglas Drive North
Golden Valley, MN 55422
customer.honeywell.com

® U.S. Registered Trademark
© 2012 Honeywell International Inc.
63-2640—08 M.S. Rev. 10-12
Printed in United States

Valve model number description

Every MAXON gas electro-mechanical valve can be accurately identified by the model number shown on the valve nameplate. The example below shows a typical gas electro-mechanical valve model number, along with the available choices for each item represented in the model number.

Configured item number						Valve body					Actuator					
Valve size	Flow capacity	Valve type	Normal position	Area classification		Body connection	Body seals & bumper material	Body material	Internal trim package		Solenoid OR circuit board voltage	Motor voltage OR handle side plate	Motor timing (automatic valves only)	Switch options	Enclosure rating	Instruction language
300	C	MA	1	1	-	A	A	1	1	-	B	B	2	0	A	0

Valve size
075 - 3/4" (DN20)
100 - 1" (DN25)
125 - 1-1/4" (DN32)
150 - 1-1/2" (DN40)
200 - 2" (DN50)
250 - 2-1/2" (DN65)
300 - 3" (DN80)
400 - 4" (DN100)
600 - 6" (DN150)

Flow capacity
S - Standard
C - CP body construction
H - High capacity

Valve reset type
MA - MAXON automatic (motorized) valve
MM - MAXON manual valve

Normal position
1 - Normally closed shut-off valve
2 - Normally open vent valve

Area classification
1 - General purpose
2 - Non-incendive, Class I, II and III Division 2
4 - Valve body only (400 & 600 high capacity valves only)

Body connection
A - ANSI (NPT) threaded
B - ANSI flanged (PN20)
C - ISO 7/1 threaded
D - DIN PN16 flanged
E - Socket welded nipple
F - Socket welded nipple w/Class 150 flange (ISO 7005 PN20)
H - EN1092-1 PN16 flanged (ISO 7005-1 PN16)

Body seals & bumper material
A - Buna o-rings/Buna bumper
B - Viton o-rings/Buna bumper
C - Viton o-rings/Viton bumper [1]
D - Ethylene Propylene o-rings/Ethylene Propylene bumper [1]
E - Omniflex o-rings/Buna bumper
F - Omniflex o-rings/Viton bumper [1]

Body material
1 - Cast iron
2 - Carbon steel
5 - Stainless steel
6 - Low temp carbon steel

Internal trim package
1 - Trim package 1
2 - Trim package 2
4 - Trim package 2, oxy clean [1]

Solenoid OR circuit board voltage
A - 115VAC 50 Hz
B - 115VAC 60 Hz
C - 230VAC 50 Hz
D - 230VAC 60 Hz
E - 208VAC 50 Hz
F - 24VDC
G - 120VDC

Motor voltage
A - 115VAC 50 Hz
B - 115VAC 60 Hz
C - 230VAC 50 Hz
D - 230VAC 60 Hz
E - 24VDC

OR

Handle side plate
A - Standard handle
B - Tandem main
C - Tandem blocking
D - Tandem overhead
E - Wheel and chain

Motor timing
1 - 2.5 second
2 - 6 second
3 - 12 second
* - N/A with manual valves

Switch options

Automatic valves
0 - VOS1/none
1 - VOS1/VCS1
2 - VOS2/VCS2
3 - VOS2/VCS1
4 - VOS1HC/VCS1HC

Manual valves
0 - None
1 - VOS1/VCS1
2 - VOS2/VCS2
3 - VOS2/VCS1

Enclosure rating
A - NEMA 4
B - NEMA 4X

Instruction language
0 - English

[1] -18°C minimum ambient temperature limit

Maxon reserves the right to alter specifications and data without prior notice.
© 2009 Copyright Maxon Corporation. All rights reserved.

Valve model cross reference

MAXON valve model numbers have changed to intelligent coded model numbers for easy identification and specification. Valves manufactured prior to October 1, 2008 will contain an older model number system which can be easily cross referenced with the chart below.

Normally-closed (shut-off) valves General purpose, NEMA 4 or 4X	
Model number (prior to October 1, 2008)	**New model designation**
808 808 CP 5000 5000 CP 7000	SMM11 CMM11 SMA11 CMA11 HMA11
Normally-open (vent) valves General purpose, NEMA 4 or 4X	
Model number (prior to October 1, 2008)	**New model designation**
STO-M STO-A STO-A-CP	SMM21 SMA21 CMA21
Normally-closed (shut-off) valves Hazardous area classification	
Model number (prior to October 1, 2008)	**New model designation**
808 NI 808 NI CP 5000 NI 5000 NI CP	SMM12 CMM12 SMA12 CMA12
Normally-open (vent) valves Hazardous area classification	
Model number (prior to October 1, 2008)	**New model designation**
STO-M-NI STO-M-NI-CP STO-A-NI STO-A-NI-CP	SMM22 CMM22 SMA22 CMA22

Maxon reserves the right to alter specifications and data without prior notice.
© 2009 Copyright Maxon Corporation. All rights reserved.

Valve body assembly options & specifications

Normally-closed shut-off valves							
Nominal pipe size	Flow capacity	Body connections available	Body material	Trim package options	Cv rating	MOPD rating (mbar)	Special service MOPD rating (mbar) [1]
3/4" (DN20)	S	A, C	1, cast iron	1, 2, 4	19	8618	2068
1" (DN25)	S	A, C	1, cast iron	1, 2, 4	20	8618	2068
		A, C, E, F	2, 6, carbon steel				
			5, stainless steel				
1-1/4" (DN32)	S	A, C	1, cast iron	1, 2, 4	45	6895	2068
1-1/2" (DN40)	S	A, C	1, cast iron	1, 2, 4	53	4826	1379
		A, C, E, F	2, 6, carbon steel				
			5, stainless steel				
2" (DN50)	S	A, B, C, D, H	1, cast iron	1, 2, 4	86	4826	1034
		A, C, E, F	2, 6, carbon steel				
			5, stainless steel				
2-1/2" (DN65)	S	A, B, C, D	1, cast iron	1	127	2758	689
	CP		1, cast iron	1, 2, 4	304	3447	1034
		B, D, H	2, 6, carbon steel				
			5, stainless steel				
3" (DN80)	S	A, C	1, cast iron	1	173	2068	345
	CP	A, B, C, D, H	1, cast iron	1, 2, 4	423	2758	689
		B, D, H	2, 6, carbon steel				
			5, stainless steel				
4" (DN100)	CP	B, D, H	1, cast iron	1, 2, 4	490	2758	689
			2, 6, carbon steel				
			5, stainless steel				
	HC		1, cast iron		719	4137	689
			2, carbon steel				
			5, stainless steel				
6" (DN150)	S	B, D, H	1, cast iron	1, 2, 4	869	1379	Not available
			2, carbon steel				
			5, stainless steel				
	HC		1, cast iron		1172	3447	689
			2,carbon steel				
			5, stainless steel				

[1] Special service fuels (see page 10-30.1-12): Valve maximum operating pressure differential (MOPD) to be reduced

Body connections:
A - NPT
B - ANSI flanged (ISO 7005 PN20)
C - ISO 7-1 threaded
D - DIN PN16 flanged
E - Socket welded nipple
F - Socket welded nipple w/Class 150 flange (ISO 7005 PN20)
H - EN1092-1 PN16 (ISO 7005-1 PN16)

Body material:
1 - Cast iron
2 - Carbon steel
5 - Stainless steel
6 - Low temp carbon steel

Trim package options and typical material:
1 - 400 series stainless steel seat, hardened ductile iron disc, PEEK follower ring
2 - 316SS seat, 316SS disc, PEEK follower ring
4 - Oxy clean, trim 2

Body seals and bumper:
- Buna o-rings/Buna bumper
- Viton o-rings/Buna bumper
- Viton o-rings/Viton bumper
- Ethylene Propylene o-rings/Ethylene Propylene bumper
- Omniflex o-rings/Buna bumper
- Omniflex o-rings/Viton bumper

Refer to valve body assembly gas compatibility for proper elastomer selection.

Maxon reserves the right to alter specifications and data without prior notice.
© 2009 Copyright Maxon Corporation. All rights reserved.

Normally-open vent valves							
Nominal pipe size	Flow capacity	Body connections available	Body material	Trim package options	Cv rating	MOPD rating (mbar)	Special service MOPD rating (mbar) [1]
3/4” (DN20)	S	A, C	1, cast iron	1, 2, 4	19	8618	2068
1” (DN25)	S	A, C	1, cast iron	1, 2, 4	20	8618	2068
		A, C, E, F	2, 6, carbon steel				
			5, stainless steel				
1-1/2” (DN40)	S	A, C	1, cast iron	1, 2, 4	53	4826	1379
		A, C, E, F	2, 6, carbon steel				
			5, stainless steel				
2” (DN50)	S	A, B, C, D, H	1, cast iron	1, 2, 4	86	4826	1034
		A, C, E, F	2, 6, carbon steel				
			5, stainless steel				
2-1/2” (DN65)	CP	A, B, C, D	1, cast iron	1, 2, 4	304	3447	1034
		B, D, H	2, 6, carbon steel				
			5, stainless steel				
3” (DN80)	CP	A, B, C, D, H	1, cast iron	1, 2, 4	423	2758	689
		B, D, H	2, 6, carbon steel				
			5, stainless steel				
4” (DN100)	CP	B, D, H	1, cast iron	1, 2, 4	490	2758	689
			2, 6, carbon steel				
			5, stainless steel				

[1] Special service fuels (see page 10-30.1-12): Valve maximum operating pressure differential (MOPD) to be reduced

Body connections:
A - NPT
B - ANSI flanged (ISO 7005 PN20)
C - ISO 7-1 threaded
D - DIN PN16 flanged
E - Socket welded nipple
F - Socket welded nipple w/Class 150 flange (ISO 7005 PN20)
H - EN1092-1 PN16 (ISO 7005-1 PN16)

Body material:
1 - Cast iron
2 - Carbon steel
5 - Stainless steel
6 - Low temp carbon steel

Trim package options and typical material:
1 - 400 series stainless steel seat, hardened ductile iron disc, PEEK follower ring
2 - 316SS seat, 316SS disc, PEEK follower ring
4 - Oxy clean, trim 2

Body seals and bumper:
- Buna o-rings/Buna bumper
- Viton o-rings/Buna bumper
- Viton o-rings/Viton bumper
- Ethylene Propylene o-rings/Ethylene Propylene bumper
- Omniflex o-rings/Buna bumper
- Omniflex o-rings/Viton bumper

Refer to valve body assembly gas compatibility for proper elastomer selection.

Maxon reserves the right to alter specifications and data without prior notice.
© 2009 Copyright Maxon Corporation. All rights reserved.

Valve actuator options

Automatic reset valves							
Nominal pipe size	Flow capacity	Normal position	Area classification	Solenoid OR circuit board voltage	Motor voltage	Motor timing	Switch options
3/4” (DN20)	S	1, 2	1 2	A, B, C, D, E, F, G A, B, C, D, F, G	A, B C, D, E A, B, C, D	1, 2 1, 2	0, 1, 2, 3, 4 0 , 1, 2, 3
1” (DN25)	S	1, 2	1 2	A, B, C, D, E, F, G A, B, C, D, F, G	A, B, C, D, E A, B, C, D	1, 2 1, 2	0, 1, 2, 3, 4 0, 1, 2, 3
1-1/4” (DN32)	S	1	1 2	A, B, C, D, E, F, G A, B, C, D, F, G	A, B, C, D, E A, B, C, D	1, 2 1, 2	0, 1, 2, 3, 4 0, 1, 2, 3
1-1/2” (DN40)	S	1, 2	1 2	A, B, C, D, E, F, G A, B, C, D, F, G	A, B, C, D, E A, B, C, D	1,2 1,2	0, 1, 2, 3, 4 0, 1, 2, 3
2” (DN50)	S	1, 2	1 2	A, B, C, D, E, F, G A, B, C, D, F, G	A, B, C, D, E A, B, C, D	1, 2 1, 2	0, 1, 2, 3, 4 0, 1, 2, 3
2-1/2” (DN65)	S	1	1 2	A, B, C, D, E, F, G A, B, C, D, F, G	A, B, C, D, E A, B, C, D	1, 2 1, 2	0, 1, 2, 3, 4 0, 1, 2, 3
3” (DN80)	S	1	1 2	A, B, C, D, E, F, G A, B, C, D, F, G	A, B, C, D, E A, B, C, D	1, 2 1, 2	0, 1, 2, 3, 4 0, 1, 2, 3
2-1/2” (DN65)	C	1, 2	1 2	A, B, C, D, E, F, G A, B, C, D, F, G	A, B, C, D, E A, B, C, D	2 2	0, 1, 2, 3, 4 0, 1, 2, 3
3” (DN80)	C	1, 2	1 2	A, B, C, D, E, F, G A, B, C, D, F, G	A, B, C, D, E A, B, C, D	2 2	0, 1, 2, 3, 4 0, 1, 2, 3
4” (DN100)	C	1, 2	1 2	A, B, C, D, E, F, G A, B, C, D, F, G	A, B, C, D, E A, B, C, D	2 2	0, 1, 2, 3, 4 0, 1, 2, 3
4” (DN100)	H	1	1	A, B, C, D, G	A, B, C, D	3	0, 1, 2, 3
6” (DN150)	H	1	1	A, B, C, D, G	A, B, C, D	3	0. 1, 2, 3

Flow capacity
S - Standard
C - CP body construction
H - High capacity

Normal position
1 - Normally-closed shut-off valve
2 - Normally-open vent valve

Area classification
1 - General purpose
2 - Non-incendive, Class I, II and III, Division 2

Solenoid OR circuit board voltage
A - 115VAC 50 Hz
B - 115VAC 60 Hz
C - 230VAC 50 Hz
D - 230VAC 60 Hz
E - 208VAC 50 Hz
F - 24VDC
G - 120VDC

Motor voltage
A - 115VAC 50 Hz
B - 115VAC 60 Hz
C - 230VAC 50 Hz
D - 230VAC 60 Hz
E - 24VDC

Motor timing
1 - 2.5 second
2 - 6 second
3 - 12 second

Switch options
0 - VOS1/None
1 - VOS1/VCS1
2 - VOS2/VCS2
3 - VOS2/VCS1
4 - VOS1HC/VCS1HC

Maxon reserves the right to alter specifications and data without prior notice.
© 2009 Copyright Maxon Corporation. All rights reserved.

Manual reset valves						
Nominal pipe size	Flow capacity	Normal position	Area classification	Solenoid voltage	Handle side plate options	Switch options
3/4” (DN20)	S	1	1 2	A, B, C, D, E, F, G A, B, C, D, F, G	A, B, C, D, E A, B, C, D, E	0, 1, 2, 3 0, 1, 2, 3
		2	1 2	A, B, C, D, E, F, G A, B, C, D, F, G	A, E A, E	0, 1, 2, 3 0, 1, 2, 3
1” (DN25)	S	1	1 2	A, B, C, D, E, F, G A, B, C, D, F, G	A, B, C, D, E A, B, C, D, E	0, 1, 2, 3 0, 1, 2, 3
		2	1 2	A, B, C, D, E, F, G A, B, C, D, F, G	A, E A, E	0, 1, 2, 3 0, 1, 2, 3
1-1/4” (DN32)	S	1	1 2	A, B, C, D, E, F, G A, B, C, D, F, G	A, B, C, D, E A, B, C, D, E	0, 1, 2, 3 0, 1, 2, 3
1-1/2” (DN40)	S	1	1 2	A, B, C, D, E, F, G A, B, C, D, F, G	A, B, C, D, E A, B, C, D, E	0, 1, 2, 3 0, 1, 2, 3
		2	1 2	A, B, C, D, E, F, G A, B, C, D, F, G	A, E A, E	0, 1, 2, 3 0, 1, 2, 3
2” (DN50)	S	1	1 2	A, B, C, D, E, F, G A, B, C, D, F, G	A, B, C, D, E A, B, C, D, E	0, 1, 2, 3 0, 1, 2, 3
		2	1 2	A, B, C, D, E, F, G A, B, C, D, F, G	A, E A, E	0, 1, 2, 3 0, 1, 2, 3
2-1/2” (DN65)	S	1	1 2	A, B, C, D, E, F, G A, B, C, D, F, G	A, B, C, D, E A, B, C, D, E	0, 1, 2, 3 0, 1, 2, 3
3” (DN80)	S	1	1 2	A, B, C, D, E, F, G A, B, C, D, F, G	A, B, C, D, E A, B, C, D, E	0, 1, 2, 3 0, 1, 2, 3
2-1/2” (DN65)	C	1	1 2	A, B, C, D, E, F, G A, B, C, D, F, G	A, B, C, D, E A, B, C, D, E	0, 1, 2, 3 0, 1, 2, 3
		2	2	A, B, C, D, F, G	A, E	0, 1, 2, 3
3” (DN80)	C	1	1 2	A, B, C, D, E, F, G A, B, C, D, F, G	A, B, C, D, E A, B, C, D, E	0, 1, 2, 3 0, 1, 2, 3
		2	2	A, B, C, D, F, G	A, E	0, 1, 2, 3
4” (DN100)	C	1	1 2	A, B, C, D, E, F, G A, B, C, D, F, G	A, B, C, D, E A, B, C, D, E	0, 1, 2, 3 0, 1, 2, 3
		2	2	A, B, C, D, F, G	A, E	0, 1, 2, 3
6” (DN150)	S	1	1 2	A, B, C, D, E A, B, C, D	A, B, C, D, E A, B, C, D, E	0, 1, 2, 3 0, 1, 2, 3

Flow capacity
S - Standard
C - CP body construction
H - High capacity

Normal position
1 - Normally-closed shut-off valve
2 - Normally-open vent valve

Area classification
1 - General purpose
2 - Non-incendive, Class I, II and III, Division 2

Solenoid voltage
A - 115VAC 50 Hz
B - 115VAC 60 Hz
C - 230VAC 50 Hz
D - 230VAC 60 Hz
E - 208VAC 50 Hz
F - 24VDC
G - 120VDC

Handle side plate options
A - Standard handle
B - Tandem main
C - Tandem blocking
D - Tandem overhead
E - Wheel and chain

Switch options
0 - None
1 - VOS1/VCS1
2 - VOS2/VCS2
3 - VOS2/VCS1

Maxon reserves the right to alter specifications and data without prior notice.
© 2009 Copyright Maxon Corporation. All rights reserved.

Valve body assembly specifications

1) Body
2) Bonnet
3) Seat
4) Disc
5) Follower ring
6) Seat o-ring
7) Body o-ring
8) Wavy spring
9) Stem
10) Spring pin
11) Stem o-ring
12) Striker plate
13) Bumper
14) Flow direction
15) Typical stem/disc connection used with smaller sized valves

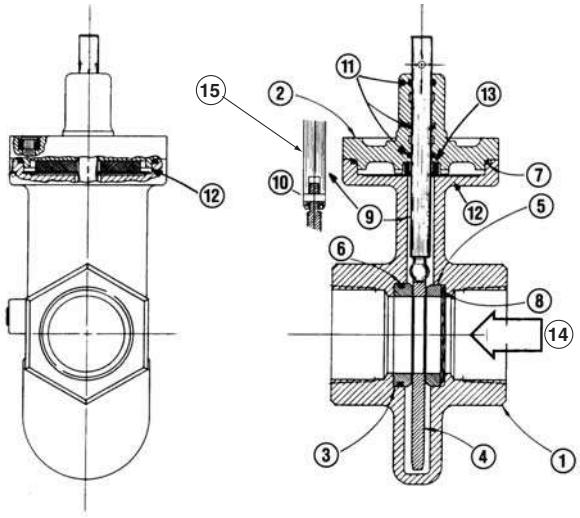

Threaded CP body design shown

Body and bonnet materials					
Item number	Description	Material code			
		1	2	5	6
1	Body	Cast iron ASTM A126, Class B	Carbon steel ASTM A216, Gr. WCB	Stainless steel ASTM A351 Gr. CF8M	Low temp carbon steel ASTM A352 Gr. LCB
2	Bonnet				

Body seals and bumper material		
Item number	Description	Material
6	Seat o-ring	Buna o-rings/Buna bumper Viton o-rings/Buna bumper Viton o-rings/Viton bumper Ethylene Propylene o-rings/Ethylene Propylene bumper Omniflex o-rings/Buna bumper Omniflex o-rings/Viton bumper
7	Body o-ring	
11	Stem o-ring	
13	Bumper	

Trim package materials			
Item number	Description	Internal trim package	
		1	2
3	Seat	400 series stainless steel	316 stainless steel
4	Disc	Hardened ductile iron	316 stainless steel
5	Follower ring	PEEK	PEEK
8	Wavy spring	300 series stainless steel	
9	Stem	17-4 PH stainless steel	
10	Spring pin (when required)	Carbon steel	400 series stainless steel
12	Striker plate	17-7 PH stainless steel	

Maxon reserves the right to alter specifications and data without prior notice.
© 2009 Copyright Maxon Corporation. All rights reserved.

Valve body assembly - gas compatibility

Gas	Gas code	Suggested material options			MOPD rating	Agency approvals and certifications				
		Body seals & bumper	Body & bonnet	Trim package		FM	CSA [3]	CE [4]		UL [3]
								GAD	MD	
Air	AIR	A, B, C, E, F	1, 2, 5, 6	1, 2	Std.	X	X		X	X
Ammonia	AMM	A, D, E	1, 2, 5, 6	1, 2	Std.	X	X		X	
Butane gas	BUT	A, B, C, E, F	1, 2, 5, 6	1, 2	Std.	X	X	X	X	X
Coke oven gas	COKE	C, F	1, 2, 5, 6	2	[5]	X	X		X	
Delco	DEL	A, B, C, E, F	1, 2, 5, 6	1, 2	Std.	X	X		X	X
Digester [1]	DIG	Analysis required	5	2	[5]	X	X		X	
Endothermic AGA	ENDO	A, B, C, E, F	1, 2, 5, 6	1, 2	Std.	X	X		X	X
Exothermic gas	EXO	A, B, C, E, F	1, 2, 5, 6	1, 2	Std.	X	X		X	X
Hydrogen gas	HYD	A, B, C, E, F	1, 2, 5, 6	1, 2	[2]	X	X		X	
Manufactured [1]	MFGD	Analysis required	5	2	Std.	X	X		X	
Natural gas	NAT	A, B, C, E, F	1, 2, 5, 6	1, 2	Std.	X	X	X	X	X
Nitrogen	NIT	A, B, C, E, F	1, 2, 5, 6	1, 2	Std.	X	X		X	X
No. 1 fuel oil [6]	NO1OIL	A, B, C, E, F	1, 2, 5, 6	1, 2	Std.	X	X		X	X
No. 2 fuel oil [6]	NO2OIL	A, B, C, E, F	1, 2, 5, 6	1, 2	Std.	X	X		X	X
Oxygen high	OXYH	C, D, F	2, 5, 6	4	8.62 barg max	X	X		X	
Oxygen low	OXYL	C, D, F	1, 2, 5, 6	4	2.07 barg max	X	X		X	
Propane	PROP	A, B, C, E, F	1, 2, 5, 6	1, 2	Std.	X	X	X	X	X
Refinery [1]	REF	Analysis required	5	2	[5]	X	X		X	
Sour natural [1]	SOUR	Analysis required	5	2	[5]	X	X		X	
Town gas [1]	TOWN	Analysis required	5	2	Std.	X	X	X	X	
Land fill gas [1]	LAND	Analysis required	5	2	[5]	X	X		X	

[1] Other body and trim packages may be acceptable pending fuel analysis. For pricing inquiries, Viton or Omniflex o-rings should be used. Contact MAXON for details.
[2] Valve maximum operating pressure differential (MOPD) to be reduced by 25% from standard ratings.
[3] ISO connections are not recognized by CSA or UL standards
[4] SMA11, CMA11, SMM11, CMM11, SMA21, CMA21, SMM21 Series electro-mechanical valves meet the essential requirements of the Low Voltage (73/23/EEC), EMC (2004/108/EC) and Gas Appliance - GAD (90/396/EEC) Directives. The Gas Appliance Directive only covers the use of commercially available fuels (natural gas, butane, town gas and LPG). MD stands for Machinery Directive (98/37/EC).
[5] Special service fuels: Valve maximum operating pressure differential (MOPD) to be reduced from standard ratings
[6] All electro-mechanical valves except HMA11 Series are approved for use with No. 1 and No. 2 fuel oils. Swinging gate style valves are preferable for liquid service.

Body seals & bumper:
A - Buna o-rings/Buna bumper
B - Viton o-rings/Buna bumper
C - Viton o-rings/Viton bumper
D - Ethylene propylene o-rings/Ethylene propylene bumper
E - Omniflex o-rings/Buna bumper
F - Omniflex o-rings/Viton bumper

Body & bonnet:
1 - Cast iron
2 - Carbon steel
5 - Stainless steel
6 - Low temp carbon steel

Trim package:
1 - Trim package 1
2 - Trim package 2
4 - Trim package 2, oxy clean

Maxon reserves the right to alter specifications and data without prior notice.
© 2009 Copyright Maxon Corporation. All rights reserved.

Electrical data

General

MAXON shut-off valves are electrically actuated from a power source. Standard assemblies include an internal holding solenoid or clutch and printed circuit board.

Position switch wiring diagrams (reproduced below) are part of each valve assembly, summarizing electrical data and wiring for a valve equipped with terminal block and a full complement of optional switches.

Good practice normally dictates that auxiliary switches in valves should be used for signal duty only, not to operate additional safety devices.

Valve position switches are offered in SPDT (single pole/double throw). Recommended packages include one open switch and one closed switch (VOS1/VCS1). Additional auxiliary switches are designated by VOS2/VCS2.

VCS (valve closed switch) is actuated at the end of the closing stroke. VOS (valve open switch) is actuated at the end of the opening stroke.

Switch amperage ratings are shown on the schematic wiring diagrams below. DO NOT EXCEED rated amperage or total load shown. Diagrams show valve with a full complement of switches. For normally-closed valves, the wiring diagram illustrates the switch contact positions with the valve closed. For normally-open valves, the wiring diagram illustrates the switch contact position with the valve open.

Figure 1: Normally-closed shut-off valves

Standard and CP valves

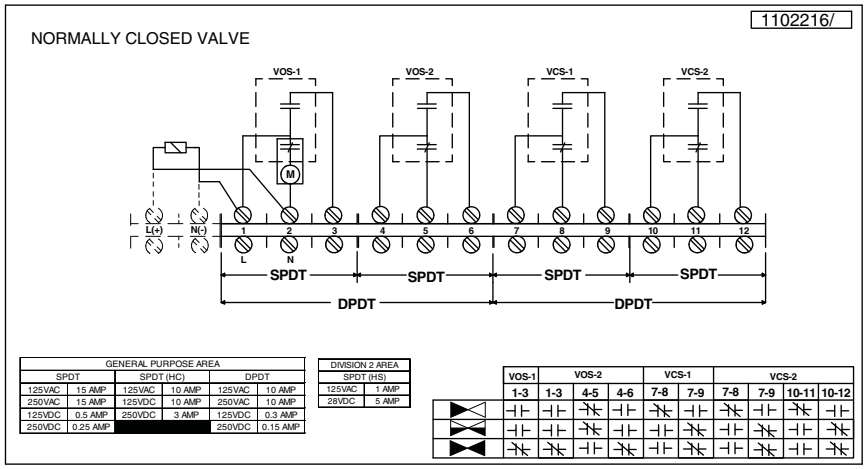

GENERAL PURPOSE AREA					
SPDT		SPDT (HC)		DPDT	
125VAC	15 AMP	125VAC	10 AMP	125VAC	10 AMP
250VAC	15 AMP	125VDC	10 AMP	250VAC	10 AMP
125VDC	0.5 AMP	250VDC	3 AMP	125VDC	0.3 AMP
250VDC	0.25 AMP			250VDC	0.15 AMP

DIVISION 2 AREA	
SPDT (HS)	
125VAC	1 AMP
28VDC	5 AMP

	VOS-1	VOS-2		VCS-1		VCS-2			
	1-3	1-3	4-5	4-6	7-8	7-9	7-8	7-9	10-11	10-12

High capacity valves (4” & 6” sizes only)

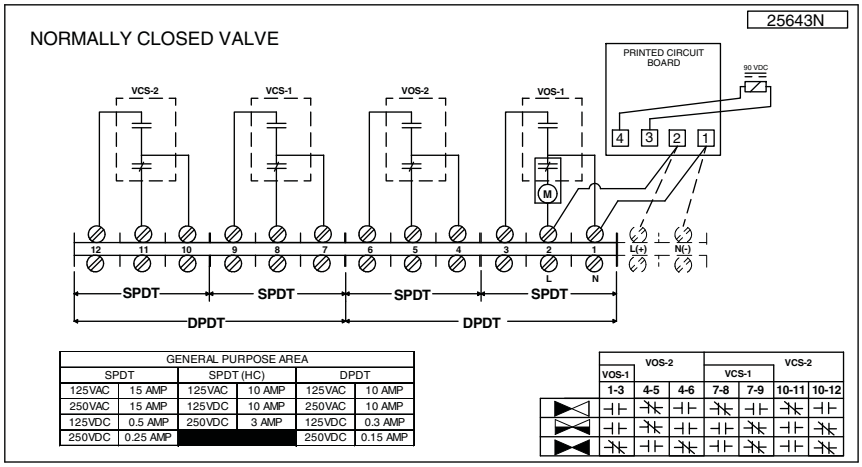

GENERAL PURPOSE AREA					
SPDT		SPDT (HC)		DPDT	
125VAC	15 AMP	125VAC	10 AMP	125VAC	10 AMP
250VAC	15 AMP	125VDC	10 AMP	250VAC	10 AMP
125VDC	0.5 AMP	250VDC	3 AMP	125VDC	0.3 AMP
250VDC	0.25 AMP			250VDC	0.15 AMP

	VOS-1	VOS-2		VCS-1		VCS-2	
	1-3	4-5	4-6	7-8	7-9	10-11	10-12

Maxon reserves the right to alter specifications and data without prior notice.
© 2009 Copyright Maxon Corporation. All rights reserved.

Figure 2: Normally-open valves

Standard and CP valves

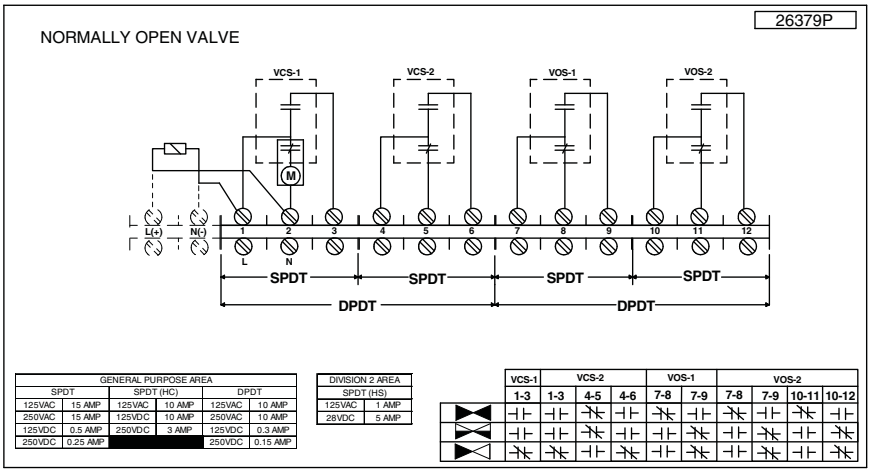

GENERAL PURPOSE AREA					
SPDT		SPDT (HC)		DPDT	
125VAC	15 AMP	125VAC	10 AMP	125VAC	10 AMP
250VAC	15 AMP	125VDC	10 AMP	250VAC	10 AMP
125VDC	0.5 AMP	250VDC	3 AMP	125VDC	0.3 AMP
250VDC	0.25 AMP			250VDC	0.15 AMP

DIVISION 2 AREA	
SPDT (HS)	
125VAC	1 AMP
28VDC	5 AMP

	VCS-1	VCS-2			VOS-1		VOS-2			
	1-3	1-3	4-5	4-6	7-8	7-9	7-8	7-9	10-11	10-12
▶◀	⊣⊢	⊣⊢	⫞⫟	⊣⊢	⫞⫟	⊣⊢	⫞⫟	⊣⊢	⫞⫟	⊣⊢
▶◀	⊣⊢	⊣⊢	⫞⫟	⊣⊢	⊣⊢	⫞⫟	⊣⊢	⫞⫟	⊣⊢	⫞⫟
▶◀	⫞⫟	⫞⫟	⊣⊢	⫞⫟	⊣⊢	⫞⫟	⊣⊢	⊣⊢	⫞⫟	⊣⊢

Maxon reserves the right to alter specifications and data without prior notice.
© 2009 Copyright Maxon Corporation. All rights reserved.

Dimensions and weights

Valve bodies: 3/4” (DN20) to 3” (DN80)

1) (2) 1/4” NPT test connection

Body connection A & C

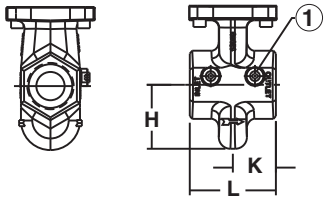

Body connection B, D & H

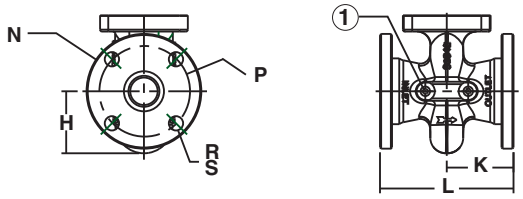

Body connection E

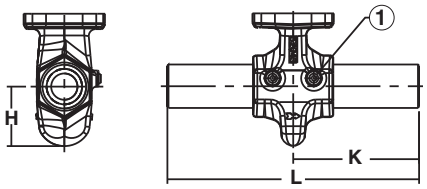

Body connection F

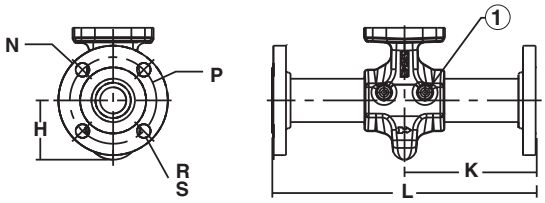

Valve size	Flow capacity	Body Connection	Body/ bonnet material	Approximate dimensions (in mm)							Approximate weight (in kg)		
				H	K	L	N Ø	P Ø	R Ø	S # of holes	Body assembly	Actuator assembly	Total weight
3/4” (DN20)	S	A, C	Cast iron	51	48	96	N/A				3.6	5	8.6
1” (DN25)	S	A, C	Cast iron				N/A				3.6		8.6
		A, C	Carbon steel & stainless steel				N/A				4		9
		E			175	350	N/A				5		10
		F			185	368	109	79	16	4	6.8		11.8
1-1/4” (DN32)	S	A, C	Cast iron	61	51	102	N/A				4		9
1-1/2” (DN40)	S	A, C	Cast iron	68			N/A				5		10
		A, C	Carbon steel & stainless steel				N/A				5		10
		E			173	345	N/A				6		11
		F			183	366	127	99	16	4	9.5		14.5
2” (DN50)	S	A, C	Cast iron	84	56	112	N/A				7	6	13
		B			89	178	152	122	19	4	12		18
		D, H					165	124	18		12		18
		A, C	Carbon steel & stainless steel		56	112	N/A				8		14
		E			175	350	N/A				10		16
		F			185	368	152	122	19	4	15		21
2-1/2” (DN65)	S	A, C	Cast iron	74	63	127	N/A				8.6		14.6
		B		79	96	190	178	140	19	4	13.5		19.5
		D, H					185	145	18		13.5		19.5
3” (DN80)	S	A, C	Cast iron	76	66	132	N/A				9		15

Flow capacity:
S - Standard
C - CP body construction
H - High capacity

Body connection:
A - NPT
B - ANSI flanged (ISO 7005 PN20)
C - ISO 7-1 threaded
D - DIN PN16 flanged
E - Socket welded nipple
F - Socket welded nipple w/Class 150 flange (ISO 7005 PN20)
H - EN 1092-1 PN16 (ISO 7005-1 PN16)

Maxon reserves the right to alter specifications and data without prior notice.
© 2009 Copyright Maxon Corporation. All rights reserved.

MAXON
A Honeywell Company

Valve actuators: 3/4” through 1-1/2” valves

1) (2) 3/4” NPT conduit connection
2) (2) 1/4” NPT test connection
3) Terminal block cover

NOTE: 70 mm needed for terminal block cover removal

Automatic reset type (SMA11, SMA21, SMA12, SMA22)
(formerly 5000, STO-A, 5000 NI, STO-A-NI)

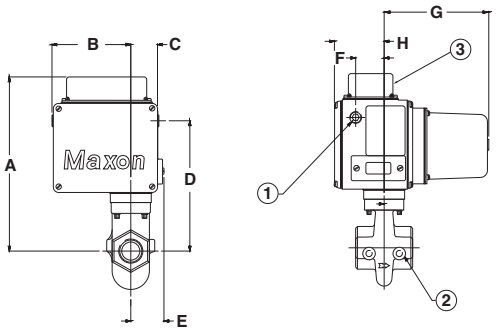

Manual reset type (SMM11, SMM21, SMM12, SMM22)
(formerly 808, STO-M, 808 NI, STO-M-NI)

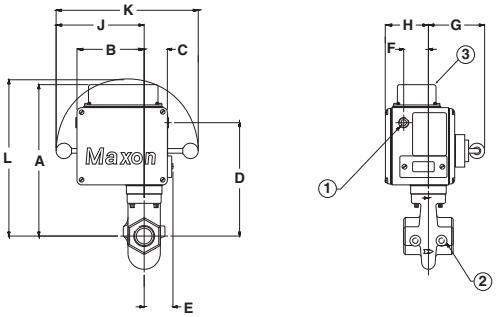

Valve size	Flow capacity	Valve type	Approximate dimensions (in mm)										
			A	B	C	D	E	F	G	H	J	K	L
3/4” (DN20)	S	MM11, MM21	311	140	47	206	58	51	114	89	181	292	294
		MM12, MM22								139			
		MA11, MA21							186	89			
		MA12, MA22								139			
1” (DN25)	S	MM11, MM21	311			206			114	89	181	292	294
		MM12, MM22								139			
		MA11, MA21							186	89			
		MA12, MA22								139			
1-1/4” (DN32)	S	MM11	325			220			114	89	181	292	308
		MM12								139			
		MA11							186	89			
		MA12								139			
1-1/2” (DN40)	S	MM11, MM21	338			232			114	89	181	292	320
		MM12, MM22								139			
		MA11, MA21							186	89			
		MA12, MA22								139			

Maxon reserves the right to alter specifications and data without prior notice.
© 2009 Copyright Maxon Corporation. All rights reserved.

Valve actuators: 2” through 3” valves

1) (2) 3/4” NPT conduit connection
2) (2) 1/4” NPT test connection
3) Terminal block cover

NOTE: 70 mm needed for terminal block removal

Automatic reset type (SMA11, SMA21, SMA12, SMA22)
(formerly 5000, STO-A, 5000 NI, STO-A-NI)

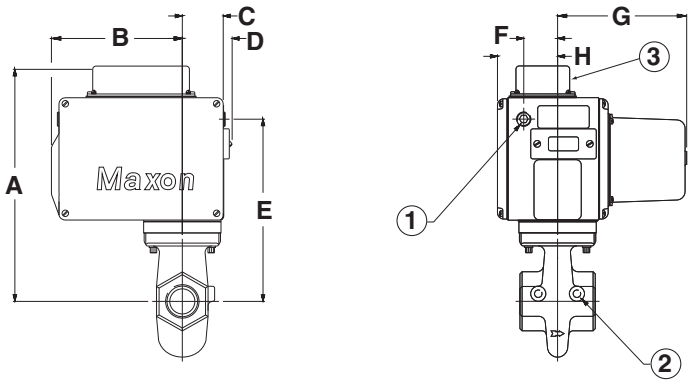

Manual reset type SMM11, SMM21, SMM12, SMM22)
(formerly 808, STO-M, 808 NI, STO-M-NI)

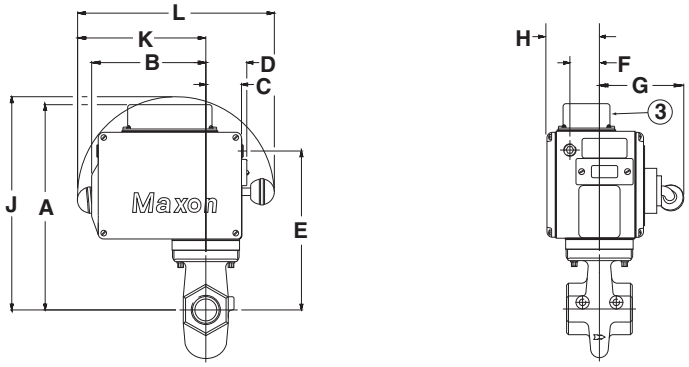

Valve size	Flow capacity	Valve type	Approximate dimensions (in mm)										
			A	B	C	D	E	F	G	H	J	K	L
2” (DN50)	S	MM11, MM21	375	193	60	74	269	50	143	89	365	217	333
		MM12, MM22								137			
		MA11, MA21							191	89			
		MA12, MA22								137			
2-1/2” (DN65)	S	MM11	371				266		143	89	362	217	333
		MM12								137			
		MA11							191	89			
		MA12								137			
3” (DN80)	S	MM11	377				272		143	89	368	217	333
		MM12								137			
		MA11							191	89			
		MA12								137			

Maxon reserves the right to alter specifications and data without prior notice.
© 2009 Copyright Maxon Corporation. All rights reserved.

Available top assembly positions

The valve top assembly can be positioned on the body in four different orientations. See sketches below to determine the designation of the required orientation for your application.

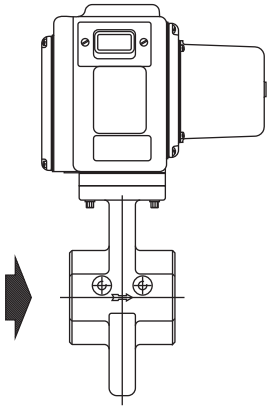

Position “R”

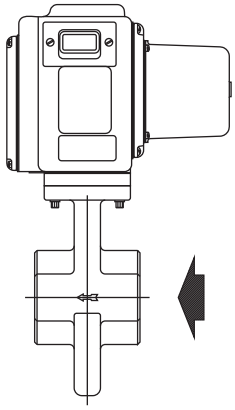

Position “L”

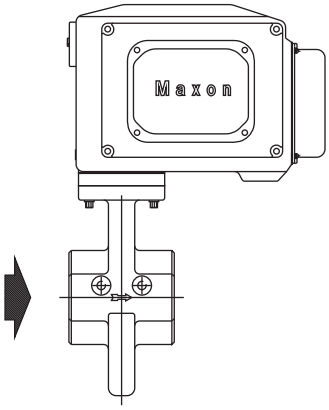

Position “AW”

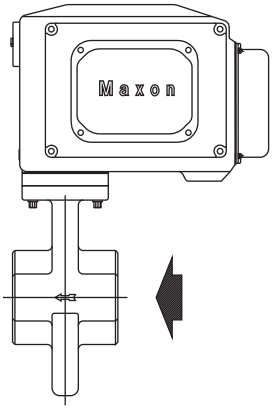

Position “TO”

Maxon reserves the right to alter specifications and data without prior notice.
© 2009 Copyright Maxon Corporation. All rights reserved.

Valve actuator spare part identification

1) Nameplate
2) Solenoid
3) VOS motor limit/signal switch for normally-closed valve; VCS for normally-open valve
4) Motor
5) Printed circuit board (PCB)
6) Clutch

3/4" standard flow through 4" CP actuators

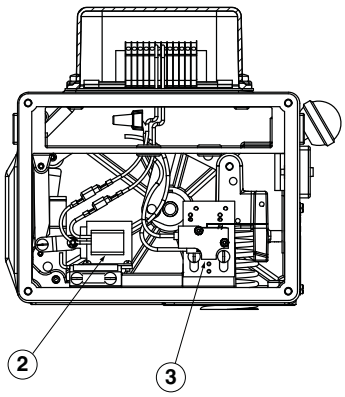

Manual reset actuator (side view)

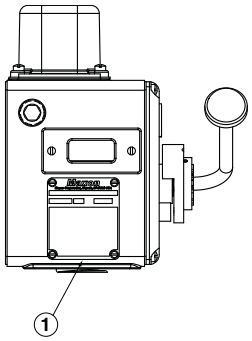

Automatic reset actuator (side view)

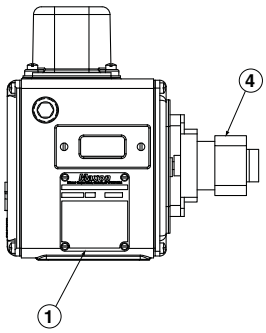

4" & 6" high capacity actuators (automatic reset only)

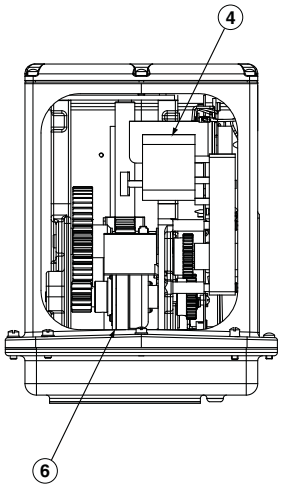

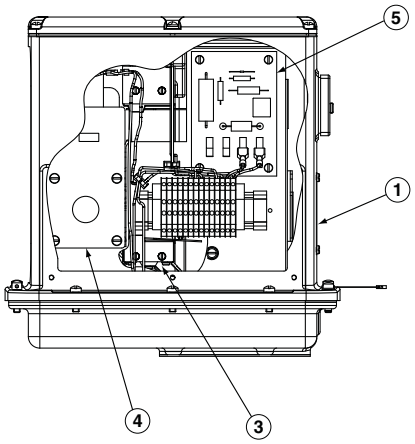

- MAXON nameplates include a model designation, which can be used to easily identify the exact components for each valve configuration.
- Standard flow and CP flow valve spare parts include the solenoid, motor, and switches as shown above.
- High capacity valve spare parts include the clutch, motor and circuit board as shown above.

Maxon reserves the right to alter specifications and data without prior notice.
© 2009 Copyright Maxon Corporation. All rights reserved.



Please read the operating and mounting instructions before using the equipment. Install the equipment in compliance with the prevailing regulations.

Bedrijfs- en montagehandleiding voor gebruik goed lezen! Apparaat moet volgens de geldende voorschriften worden geïnstalleerd.

Lire les instructions de montage et de service avant utilisation! L'appareil doit imperativement être installé selon les règlementations en vigueur.

Betriebs- und Montageanleitung vor Gebrauch lesen! Gerät muß nach den geltenden Vorschriften installiert werden.

Maxon reserves the right to alter specifications and data without prior notice.
© 2009 Copyright Maxon Corporation. All rights reserved.

The installation, operation and maintenance instructions contain important information that must be read and followed by anyone operating or servicing this product. Do not operate or service this equipment unless the instructions have been read. IMPROPER INSTALLATION OR USE OF THIS PRODUCT COULD RESULT IN BODILY INJURY OR DEATH.

Description

MAXON electro-mechanical valves are electrically actuated fuel shut-off valves. The valves are designed for a fast acting return to the at rest position upon removal of a control voltage signal. Motorized automatic and manual actuators are available depending on application needs. In addition, normally-closed and normally-open options are available. The normally-closed versions will shut off flow when de-energized and pass flow when energized. The normally-open versions will shut off flow when energized and pass flow when de-energized. Electro-mechanical valves are also offered in configurations that meet hazardous locations.

Nameplate and abbreviations

Consult the nameplate of your valve. This lists the maximum operating pressure, temperature limitations, voltage requirements and service conditions of your specific valve. Do not exceed nameplate ratings.

Abbreviation or symbol	Description
M.O.P.	Maximum operating pressure
OPENING	Valve opening time (for automatic valves only). Units shown in seconds.
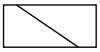	Solenoid/clutch voltage and frequency
	Motor voltage and frequency
T_{AMB}	Ambient temperature range
T_F	Fluid temperature range
SHUT	Visual indication that valve is shut
OPEN	Visual indication that valve is open
SPDT (HS)	Single pole double throw hermetically-sealed switch(es)
SPDT	Single pole double throw switch(es)
SPDT (HC)	Single pole double throw high capacity switch(es) (used when DC motors are ordered)
DPDT	Double pole double throw switch(es)
GENERAL PURPOSE AREA	Designates components used in general purpose areas
DIVISION 2 AREA	Designates components used in Division 2 hazardous locations areas
	Valve is shut
	Valve is partially open
	Valve is full open
VOS-1/2	Valve open switch(es)
VCS-1/2	Valve closed switch(es); proof of closure

Maxon reserves the right to alter specifications and data without prior notice.
© 2009 Copyright Maxon Corporation. All rights reserved.

Component identification

1) Access cover screws
2) Access cover
3) Visual indication
4) Mainbase
5) Nameplate
6) Actuator bolts
7) Flow arrow
8) Valve body
9) Terminal block cover screws
10) Terminal block cover
11) Motor cover screws
12) Motor cover
13) Top cover plate screws
14) Top cover plate
15) Top housing
16) Top housing screws

Automatic (motorized) valve
Current model designation
(former model designation)
SMA11 (5000), CMA11 (5000 CP),
SMA21 (STO-A), CMA21 (STO-A-CP)

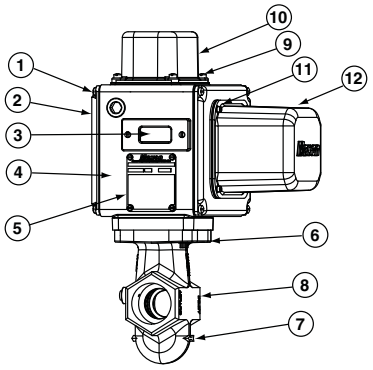

Manual valve
Current model designation
(former model designation)
SMM11 (808), CMM11 (808 CP), SMM21 (STO-M)

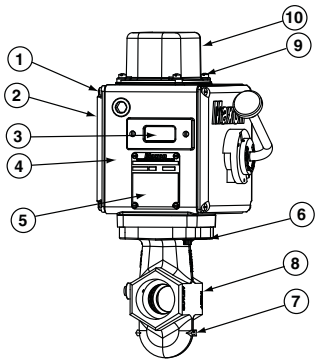

Automatic (motorized) valve - 4" & 6" high capacity
Current model designation (former model designation)
HMA11 (7000)

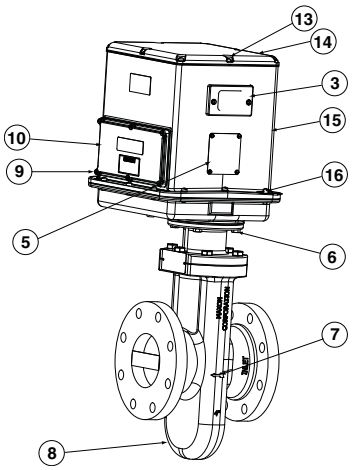

Table 1 - Torque specifications			
Valve type	Item number	Description	Torque Nm
Standard and CP valves	1	Access cover screws 1/4-20	11
	6	Actuator bolts 5/16-18 (3/4" - 1-1/2" sizes)	47
	6	Actuator bolts 3/8-16 (2" - 6" sizes)	55
	9	Terminal block cover screws 1/4-20	6
	11	Motor cover screws #10-24	3.5
High capacity valves	9	Terminal block cover screws #10-24	3.5
	13	Top cover plate screws 1/4-20	11
	16	Top housing screws 1/4-20	11

Maxon reserves the right to alter specifications and data without prior notice.
© 2009 Copyright Maxon Corporation. All rights reserved.

Installation

1. A gas filter or strainer of 40 mesh (0.6 mm) or smaller is recommended in the fuel gas piping to protect the downstream safety shut-off valves.

2. Properly support and pipe the valve in the direction of the flow arrow on the valve body. Valve seats are directional. Sealing will be maintained at full rated pressures in one direction only. Sealing will be provided in reverse flow only at reduced pressures.

3. Mount valve so that open/shut window indicator will be visible to your operating personnel. The open/shut window indicator should never face downward. The valve side plates should be located in a vertical plane for best performance. Valves are usually installed in horizontal piping; however, other orientations are acceptable, subject to the above limitations. The top assemblies of all MAXON valves are field rotatable to allow installations involving conflicts with these mounting restrictions.

4. Wire the valve in accordance with all applicable local and national codes and standards. In U.S. and Canada, wiring must conform to the NEC ANSI/NFPA 70 and/or CSA C22.1, Part 1.
   - Supply voltages must agree with valve's nameplate voltage within -15%/+10% for proper operation. For electrical wiring schematic, see instructions or sample affixed inside valve terminal block cover.
   - Grounding is achieved with a grounding screw, which is located in the top assembly.
   - Customer connections are provided via terminal blocks located in the top assembly.
   - Main power wiring (120 VAC or 240 VAC) must be segregated from lower voltage 24 VDC signal wiring, when both are required.

5. Maintain integrity of the electro-mechanical actuator enclosures by using the appropriate electrical connectors for the (2) 3/4" NPT conduit threaded connections. The electrical enclosure is NEMA 4 rated with an option for NEMA 4X.

6. All access cover plate screws should be tightened using an alternate cross-corner tightening pattern to the values shown in Table 1 on page 10-30.1-31.

7. Verify proper installation and operation by electrically actuating the valve for 10-15 cycles prior to the first introduction of gas.

Auxiliary features

- Non-adjustable proof of closure switch(es) with valve seal over travel interlock
- Auxiliary switch for indication of full travel (open for normally-closed valves, closed for normally-open valves)

Operating environment

- Actuators rated for NEMA 4 or optional NEMA 4X
- Ambient and fluid temperature range of -28°C to 60°C for standard and CP flow constructions
- Ambient and fluid temperature range of -28°C to 52°C for high capacity flow constructions
- All valves for oxygen service or using Ethylene Propylene body seals are limited to a minimum ambient and fluid temperature of -18°C

Maxon reserves the right to alter specifications and data without prior notice.
© 2009 Copyright Maxon Corporation. All rights reserved.

Actuator assembly rotation



MAXON electro-mechanical valves should be ordered in a configuration compatible with planned piping. If valve orientation is not correct, the actuator assembly can be rotated in 90° increments around the valve body centerline axis using the procedure below.

1. Shut off all electrical power and close off upstream manual cock.
2. Remove terminal block cover plate and disconnect power lead wires. (Tag carefully for later re-assembly.)
3. Remove conduit and electrical leads.
4. Note physical position of any signal switch actuator wands on auxiliary signal switches.
5. Unscrew the two actuator bolts screwed up from the bottom to 6 mm. DO NOT completely remove. These bolts secure the valve body to the valve's top assembly housing.
6. Gently lift the top assembly (not more than 6 mm in height); just enough to break the seal between the valve body assembly and the rubber gasket adhering to the bottom of the top housing.



WARNING: Lifting too far may dislodge some small parts inside the top housing, requiring complex re-assembly and retesting by trained factory personnel.

7. Remove the two actuator bolts screwed up from the bottom (were partially unscrewed in step 5).
8. Carefully rotate top assembly to the desired position in a plane parallel to the top of the valve body casting. Rotate the top housing about 30° beyond this position, and then rotate it back. Reposition the top housing back down onto the valve body casting. This should align the open/shut indicator with its window and provide proper alignment of the internal mechanism.
9. Realign holes in valve body casting with the corresponding tapped holes in the bottom of the top assembly housing. Be sure the gasket is still in place between the body and top housing.
10. Reinsert the actuator bolts up from the bottom through the body and carefully engage threads of the top assembly. Tighten securely.
11. Reconnect conduit and electrical leads, then check that signal switch wands are properly positioned and that the open/shut indicator moves freely. Failure to correct any such misalignment can result in extensive damage to the internal mechanism of your valve.
12. Energize valve and cycle several times from closed to full open position. Also electrically trip the valve in a partially opened position to prove valve operates properly.
13. Replace and secure terminal block cover plate and place valve in service.

Maxon reserves the right to alter specifications and data without prior notice.
© 2009 Copyright Maxon Corporation. All rights reserved.

Field installation of valve position switch

General

- Shut off fuel supply upstream of valve, then de-energize valve electrically.
- Remove terminal block and access cover to provide access, being careful not to damage gaskets.
- Compare with illustrations below to identify your valve type.

Replacement switches

- Note wand position and mounting hole location carefully, then remove 2 screws and lift existing switch.
- Install replacement switch in same mounting holes on bracket and verify correct wand position.
- Replace existing wiring one connection at a time, following original route and placement.

Add switches

NOTE: Instructions below are written for normally-closed valves. For normally-open valves, reverse switch nomenclature (VOS becomes VCS and vice versa).

- Check illustrations below. If your valve uses a switch mounting bracket as in Fig. 1 & 2, mount switches to bracket using the mounting holes appropriate for valve type and size. For high capacity valves, mount switches on the support stand.
- Position bracket so VCS wand just touches top of actuator, then move downward slightly, depressing wand until switch clicks, then tighten mounting screws to hold this position.
- Pin bracket by drilling 3 mm diameter holes 6 mm deep into bracket mounting pad through drive pin holes, then tap drive pin in until flush (not required for high capacity valves).
- Route wires to wiring compartment as shown, then complete wiring connections and clean out metal drilling chips from previous procedure.
- Cycle valve, checking switch actuation points carefully. (VCS actuates at top of stem stroke, VOS at bottom.) Simultaneously the valve body must be tested for switch continuity and seat leakage. Bend VOS switch wands slightly if necessary to insure valve is opening fully.
- Replace covers, then return valve to service.

Fig. 1
Manual reset actuator
3/4” - 3” standard flow

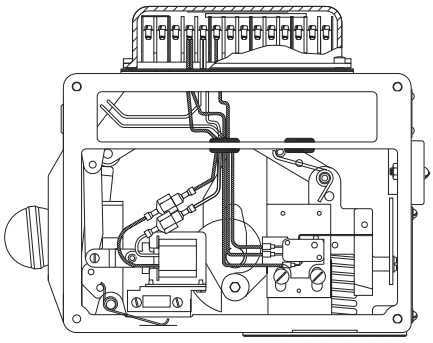

Reference mounting bracket A

Fig. 2
Automatic reset actuator
2-1/2” CP - 4” CP and 6” standard flow

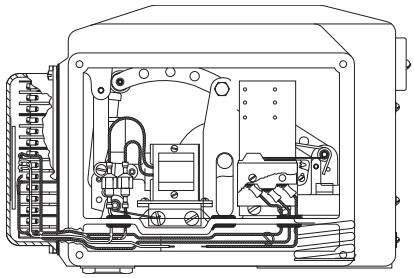

Reference mounting bracket B

Fig. 3
Automatic reset actuator
4” & 6” high capacity

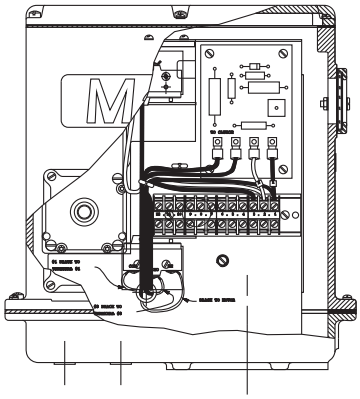

Switches mount on support stand

Maxon reserves the right to alter specifications and data without prior notice.
© 2009 Copyright Maxon Corporation. All rights reserved.

MAXON
A Honeywell Company

Wand position (for normally-closed valves)

VOS switch wand should be actuated from above



VCS switch wand should be actuated from below



Mounting brackets

Mounting bracket A

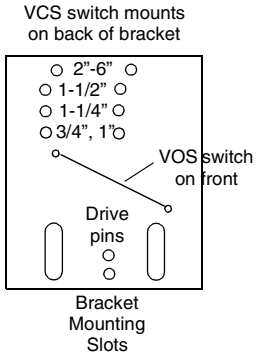

Mounting bracket B

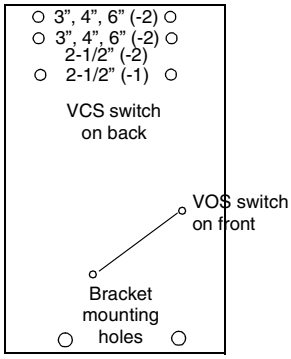

Maxon reserves the right to alter specifications and data without prior notice.
© 2009 Copyright Maxon Corporation. All rights reserved.

Maintenance instructions

MAXON electro-mechanical valves are endurance tested far in excess of the most stringent requirements of the various approval agencies. They are designed for long life even if frequently cycled, and to be as maintenance-free and trouble-free as possible. A valve operational test should be performed on an annual basis. If abnormal opening or closing is observed, the valve should be removed from service and your MAXON representative should be contacted. (See MAXON Technical Document 10-35.1.)

Valve leak test should be performed on an annual basis to assure continued safe and reliable operation. Every MAXON valve is operationally tested and meets the requirements of FCI 70-2 Class VI Seat Leakage when in good operable condition. Zero leakage may not be obtained in the field after it has been in service. For specific recommendations on leak test procedures, see MAXON Technical Document 10-35.2. Any valve that exceeds the allowable leakage, as set forth by your local codes or insurance requirements should be removed from service and your MAXON representative should be contacted.

Actuator assembly components require no field lubrication and should never be oiled.

Auxiliary switches, solenoids, motors, clutches or circuit boards may be replaced in the field.



Do not attempt field repair of valve body or actuator. Any alterations void all warranties and can create potentially hazardous situations.

If foreign material or corrosive substances are present in the fuel line, it will be necessary to inspect the valve to make certain it is operating properly. If abnormal opening or closing is observed, the valve should be removed from service. Contact your MAXON representative for instructions.

Operator should be aware of and observe characteristic opening/closing action of the valve. Should operation ever become sluggish, remove valve from service and contact MAXON for recommendations.

Address inquiries to MAXON. Local worldwide offices may be located at www.maxoncorp.com. Include valve serial number and nameplate information.

Maxon reserves the right to alter specifications and data without prior notice.
© 2009 Copyright Maxon Corporation. All rights reserved.

Features

- 2-Way Normally Closed operation.
- For liquid petroleum gases (propane) in both liquified and gaseous states.
- Applications such as grain dryers, incinerators, space heaters, etc.
- Mountable in any position.

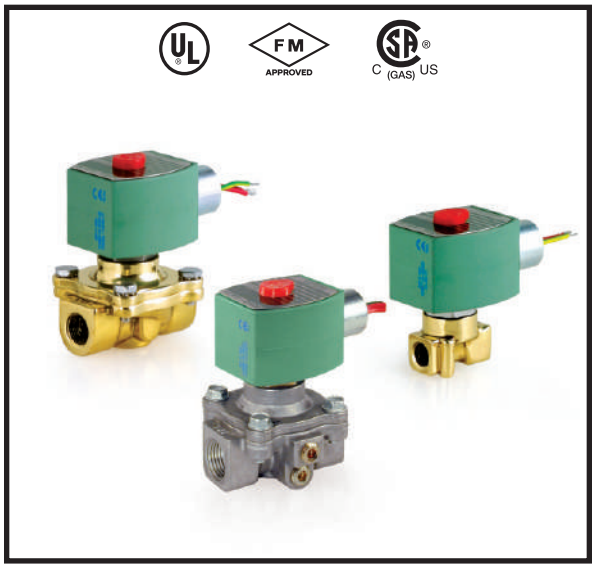

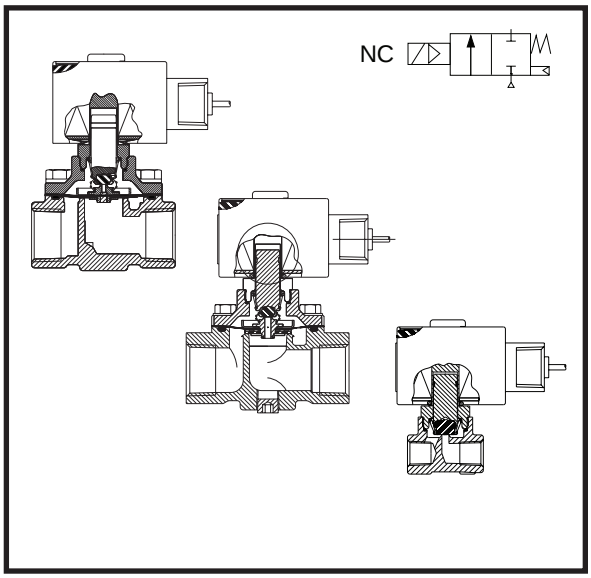

Construction

Valve Parts in Contact with Fluids				
Series	**8262**	**8210**	**8214**	**226787-1**
Body	Brass	Brass	Aluminum	Brass
Seals and Disc	NBR	NBR	NBR	NBR
Core Tube	305 SS	305 SS	305 SS	305 SS
Core Guide	Brass	Brass	Brass	Brass
Core and Plugnut	430F SS	430F SS	430F SS	430F SS
Springs	302 SS	17-7PH SS	17-7PH SS	302 SS
Shading Coil	Copper	Copper	Copper	Copper
Pipe Plug	-	-	Zinc Plated Steel	-

Electrical

Standard Coil Class of Insulation	Watt Rating and Power Consumption AC			Ambient Temp. °F	Spare Coil Family	
					General Purpose	Explosionproof
	Watts	VA Holding	VA Inrush		AC	AC
F	10.1	25	70	-20 to 125	238610	238614
F	17.1	40	93	-20 to 125	238610	238614
F	15.05	28	55	32 to 125	-	064982

Standard Voltages: 24, 120, 240 volts AC, 60 Hz (or 110, 220 volts AC, 50 Hz).

Solenoid Enclosures

(8210, 8214, 8262)
RedHat II Molded Epoxy, Watertight, Types 1, 2, 3, 3S, 4 and 4X with 1/2" conduit hub.

(226787-1)
RedHat Metal, Explosion Proof, Types 3, 7C, 7D, 9E, F&G with 1/2" conduit hub.

Approvals:

UL listed to standard 429 "Electrically Operated Valves," Guide YIOZ, File MP618, Safety Valves.

FM Approved to Class 7400 "Liquid and Gas Safety Shutoff Valves."

CSA Certified to:
1) Standard C22.2 No. 139 "Electrically Operated Valves," File 010381.

2) Automatic Gas Safety Shutoff Valves C/I (3.9), File 112872. (8210 & 8214)

3) Valves for Hazardous Locations, File 013976. (226787-1)

Specifications

Pipe Size (ins.)	Orifice Size (ins.)	CV Flow	Gas Capacity ① Btu/hr.	Operating Pressure Differential (psi) Min.	Operating Pressure Differential (psi) Max.	Max. Fluid Temp.°F	Catalog Number	Const. Ref.	Agency UL	Agency FM	Agency CSA	Wattage	Approx. Shipping Weight (lbs)
COMBUSTION (Fuel Gas) - NORMALLY CLOSED													
1/4	1/8	0.35	27,250	0	250	125	8262G232B	1	❍	-	❍	17.1	2.3
1/4	9/32	0.96	74,700	0	45	125	8262G210B	1	❍	❍	❍	10.1	2.4
3/8	5/8	2.8	218,000	5	250	125	8210H105B	2	❍	❍	❍	17.1	3.2
3/8	3/4	3.4	226,000	0	50	125	8214G010B	3	❍	❍	❍	17.1	2.0
1/2	5/8	3.6	280,000	5	250	125	8210H106B	2	❍	❍	❍	17.1	3.2
1/2	3/4	4.4	374,000	0	50	125	8214G020B	3	❍	❍	❍	17.1	2.0
3/4	3/4	5.1	397,000	0	50	125	8214G030B	4	❍	❍	❍	17.1	2.0
3/4	3/4	6.5	506,000	5	350	125	226787-1	5	❍	-	❍	15.05	3.5

❍ = Safety Shutoff Valve. ① 1" W.C. Drop @ 2" W.C. Inlet Pressure, 2,300 Btu/cu.ft. or more, 1.6 Specific Gravity Gas.

Capabilities Chart

Solenoid Options				Base Catalog Number		Resilient Materials	Standard Rebuild Kit
NEMA Type 3-9	72" Leads	High Temp.	Wiring Box Screw Terminal	Brass	Aluminum	NBR	AC
EF	L	HB	JKP	8262G232B	-	●	304088
EF	L	HT	JKF	8262G210B	-	●	304088
EF	L	HB	JKP	8210H105B	-	●	316669
-	L	HB	JKP	-	8214G010B	●	316667
EF	L	HB	JKP	8210H106B	-	●	316669
-	L	HB	JKP	-	8214G020B	●	316667
-	L	HB	JKP	-	8214G030B	●	316667
-	L	-	-	266787-1	-	●	310038

● = Standard. Other options may be available. All option combinations may not be available.

Dimensions: inches

Const. Ref. No.	A	B	E	H	J	K	L	N	P	R	T	W
1	-	3.03	-	3.16	2.04	1.78	1.56	-	2.75	-	1.95	1.18
2	1.66	3.03	-	3.95	2.04	2.42	2.75	3.42	3.39	-	1.95	2.28
3	1.14	3.03	1.36	4.08	2.04	2.47	2.75	3.42	3.46	1.36	1.95	2.50
4	1.14	3.03	1.25	4.52	2.04	2.66	3.31	3.70	3.64	1.66	1.95	2.39
5	-	3.25	-	4.63	2.76	2.44	3.78	4.38	4.00	1.62	2.50	2.75

Const. Ref. 1

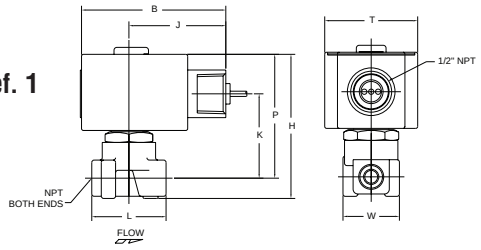

Const. Ref. 3, 4

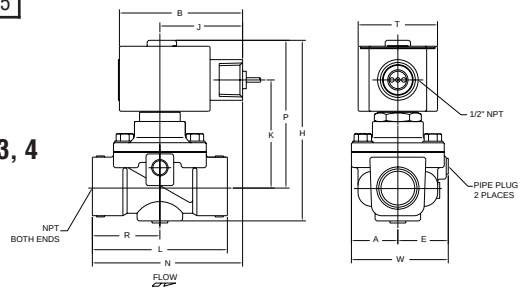

Const. Ref. 2

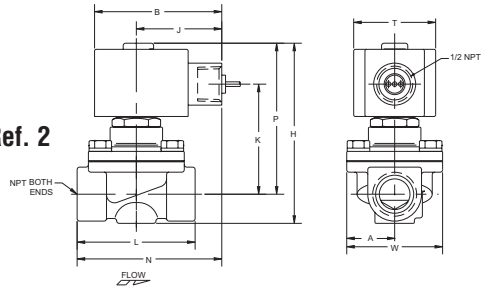

Const. Ref. 5

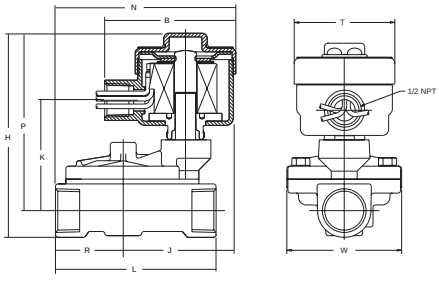

INSTALLATION AND MAINTENANCE INSTRUCTIONS

2-WAY INTERNAL PILOT OPERATED SOLENOID VALVES NORMALLY CLOSED OPERATION — 3/4 N.P.T. VALVES FOR LP GAS SYSTEMS

BULLETINS
8210
8211

ASCO

FORM NO. V-5963

DESCRIPTION

Bulletin 8210 valves are 2-way, normally closed internal pilot operated solenoid valves designed for LP gas (propane) service. Valves are of brass construction.

Bulletin 8211 valves are the same as Bulletin 8210 except the solenoids are equipped with an enclosure which is designed to meet NEMA Type 4 - Watertight, NEMA Type 7 (C or D) Hazardous Locations - Class I Groups C or D and NEMA Type 9 (E, F or G) Hazardous Locations - Class II, Groups E, F or G. Installation and Maintenance Instructions for the Explosion-Proof/Watertight Solenoid Enclosures are provided on Form No. V-5380.

OPERATION

Normally Closed: Valve is closed when solenoid is de-energized. Valve opens when solenoid is energized.

IMPORTANT: Minimum operating pressure differential is 5 psi.

INSTALLATION

Check nameplate for correct catalog number, pressure, voltage and service.

POSITIONING/MOUNTING (Refer to Figure 1)

This valve is designed to perform properly when mounted in any position. However, for optimum life and performance, the solenoid should be mounted vertical and upright so as to reduce the possibility of foreign matter accumulating in the core tube area. For mounting bracket (optional feature) dimensions, refer to Figure 1.

PIPING

Connect piping to valve according to markings on valve body. Apply pipe compound sparingly to male pipe threads only; if applied to valve threads, it may enter valve and cause operational difficulty. Pipe strain should be avoided by proper support and alignment of piping. When tightening pipe, do not use valve as a lever. Wrenches applied to valve body or piping are to be located as close as possible to connection point.

IMPORTANT: For the protection of the solenoid valve, install a strainer or filter suitable for the service involved in the inlet side as close to the valve as possible. Periodic cleaning is required, depending on service conditions. See Bulletins 8600, 8601 and 8602 for strainers.

WIRING

Wiring must comply with Local and National Electrical Codes. Housings for all solenoids are made with connections for 1/2 inch conduit. The general purpose solenoid enclosure may be rotated to facilitate wiring by removing the retaining cap or clip. **CAUTION: When metal retaining clip disengages, it will spring upward.** Rotate to desired position. Replace retaining cap or clip before operating.

SOLENOID TEMPERATURE

Standard catalog valves are supplied with coils designed for continuous duty service. When the solenoid is energized for a long period, the solenoid enclosure becomes hot and can be touched with the hand only for an instant. This is a safe operating temperature. Any excessive heating will be indicated by the smoke and odor of burning coil insulation.

MAINTENANCE

WARNING: Turn off electrical power supply and depressurize valve before making repairs. It is not necessary to remove the valve from the pipe line for repairs.

CLEANING

A periodic cleaning of all solenoid valves is desirable. The time between cleanings will vary depending on media and service conditions. In general, if the voltage to the coil is correct, sluggish valve operation, excessive noise or leakage will indicate that cleaning is required. Clean valve strainer or filter when cleaning solenoid valve.

PREVENTIVE MAINTENANCE

1. Keep the medium flowing through the valve as free from dirt and foreign material as possible.
2. While in service, operate the valve at least once a month to insure proper opening and closing.
3. Periodic inspection (depending on media and service conditions) of internal valve parts for damage or excessive wear is recommended. Thoroughly clean all parts. Replace any parts that are worn or damaged.

IMPROPER OPERATION

1. **Faulty Control Circuit:** Check the electrical system by energizing the solenoid. A metallic click signifies the solenoid is operating. Absence of the click indicates loss of power supply. Check for loose or blown-out fuses, open-circuited or grounded coil, broken lead wires or splice connections.
2. **Burned-Out Coil:** Check for open-circuited coil. Replace coil if necessary.
3. **Low Voltage:** Check voltage across the coil leads. Voltage must be at least 85% of nameplate rating.
4. **Incorrect Pressure:** Check valve pressure. Pressure to valve must be within range specified on nameplate.
5. **Excessive Leakage:** Disassemble valve and clean all parts. Replace worn or damaged parts with a complete Spare Parts Kit for best results.

COIL REPLACEMENT (Refer to Figure 1)

Turn off electrical power supply and disconnect coil lead wires.

1. Remove retaining cap or clip, nameplate and cover. **CAUTION: When metal retaining clip disengages, it will spring upward.**
2. Slip spring washer, insulating washer and coil off the solenoid base sub-assembly. Insulating washers are omitted when a molded coil is used.
3. Reassemble in reverse order of disassembly paying careful attention to exploded view provided for identification and placement of parts.

CAUTION: The solenoid must be fully reassembled as the housing and internal parts are part of and complete the magnetic circuit. Place an insulating washer at each end of coil, if required.

VALVE DISASSEMBLY AND REASSEMBLY (Refer to Figure 1)

Depressurize valve and turn off electrical power supply. Proceed in the following manner:

1. Remove retaining cap or clip and slip the entire solenoid enclosure off the solenoid base sub-assembly. **CAUTION: When metal retaining clip disengages, it will spring upward.**
2. Unscrew solenoid base sub-assembly and remove bonnet gasket and core assembly with core spring and core guide attached.
3. Remove bonnet screws (4), valve bonnet, diaphragm spring, diaphragm assembly, body gasket and body passage gasket.
4. All parts are now accessible for cleaning or replacement. Replace worn or damaged parts with a complete Spare Parts Kit for best results.
5. Reassemble in reverse order of disassembly paying careful attention to exploded view provided for identification and placement of parts.
6. Torque bonnet screws in a crisscross manner to 130 ± 15 inch-pounds.
7. Torque solenoid base sub-assembly to 175 ± 25 inch-pounds.
8. After maintenance, operate the valve a few times to be sure of proper operation.

SPARE PARTS KITS

Spare Parts Kits and Coils are available for ASCO valves.
Parts marked with an asterisk (*) are supplied in Spare Parts Kits.

ORDERING INFORMATION FOR SPARE PARTS KITS

When Ordering Spare Parts Kits or Coils, Specify Valve Catalog Number, Serial Number and Voltage.

Form No. V-5963 PRINTED IN U.S.A. 1977 Automatic Switch Co.
2011 Service Manual Rev. A

ASCO Valves
FLORHAM PARK, NEW JERSEY 07932

© Automatic Switch Co. 1977 ALL RIGHTS RESERVED

Preventive Maintenance

- Keep the medium flowing through the valve as free from dirt and foreign material as possible.
- While in service, the valve should be operated at least once a month to insure proper opening and closing.
- Depending on the medium and service conditions, periodic inspection of internal valve parts for damage or excessive wear is recommended. Thoroughly clean all parts. If parts are worn or damaged, install a complete ASCO Rebuild Kit.

Causes of Improper Operation

- **Incorrect Pressure:** Check valve pressure. Pressure to valve must be within range specified on nameplate.
- **Excessive Leakage:** Disassemble valve and clean all parts. If parts are worn or damaged, install a complete ASCO Rebuild Kit.

Valve Disassembly

⚠ WARNING: To prevent the possibility of severe personal injury or property damage, turn off electrical power, depressurize valve, extinguish all open flames and avoid any type of sparking or ignition. Vent hazardous or combustible fluid to a safe area before servicing the valve.

NOTE: Determine valve construction AC (Figure 1 on page 3) or DC (Figure 2 on page 4) then proceed as follows:

1. Remove solenoid enclosure, see separate installation and maintenance instructions.
2. For AC Construction, unscrew solenoid base sub–assembly. For DC Construction, unscrew solenoid base sub–assembly with special wrench adapter provided in ASCO Rebuild Kit. For wrench adapter only, order kit No.K218–949. NOTE: For alternate type open end wrench, order kit No.K168–146–1 which is available for solenoid base sub–assembly removal or replacement.
3. Remove bonnet screws, valve bonnet, bonnet gasket, core/diaphragm sub–assembly and body gasket.
4. All parts are now accessible to clean or replace. If parts are worn or damaged, install a complete ASCO Rebuild kit.

Valve Reassembly

1. Lubricate bonnet gasket and body gasket with a light coat of DOW CORNING® 200 Fluid lubricant or an equivalent high–grade silicone fluid.
2. Apply a light coat of RemGrit TFL 50® Dry Lubricant to:
   - Valve seat
   - Valve body flange where diaphragm assembly contacts the valve body and body gasket.
   - Internal surface of valve bonnet where diaphragm assembly contacts bonnet when valve is in the energized (open position).

IMPORTANT: If valve has been disassembled for inspection and cleaning only and a Rebuild Kit is not being installed, lubricate the following with RemGrit TFL 50® Dry Lubricant:

- Diaphragm assembly on both sides.
- Main disc at base of core/diaphragm sub–assembly.
- Pilot disc at base of core assembly.

⚠ CAUTION: Do not distort hanger spring between core assembly and diaphragm assembly when lubricating pilot disc.

3. Replace body gasket and core/diaphragm sub–assembly with closing spring attached. Locate bleed hole in core/diaphragm sub–assembly approximately 30° from the valve inlet.
4. Replace valve bonnet and bonnet screws (6). Torque screws in a crisscross manner to 100 ± 10 in–lbs [11,3 ± 1,1 Nm].
5. For AC construction, replace bonnet gasket and solenoid base sub–assembly. For DC construction refer to separate "Solenoid Installation and Maintenance Instructions" for lubrication instructions; then install bonnet gasket, housing and solenoid base sub–assembly. Torque solenoid base sub–assembly to 175 ± 25 in–lbs [19,8 ± 2,8 Nm].
6. Replace solenoid (see separate instructions) and make electrical hookup.

⚠ WARNING: To prevent the possibility of severe personal injury or property damage, check valve for proper operation before returning to service. Also perform internal seat and external leakage tests with a nonhazardous, noncombustible fluid.

7. Restore line pressure and electrical power supply to valve.
8. After maintenance is completed, operate the valve a few times to be sure of proper operation. A metallic *click* signifies the solenoid is operating.

ORDERING INFORMATION FOR ASCO REBUILD KITS

Parts marked with an asterisk (*) in the exploded views are supplied in Rebuild Kits.

• When Ordering Rebuild Kits for ASCO Valves, order the Rebuild Kit number stamped on the valve nameplate. +

+ If the number of the kit is not visible, order by indicating the number of kits required, and the Catalog Number and Serial Number of the valve(s) for which they are intended.

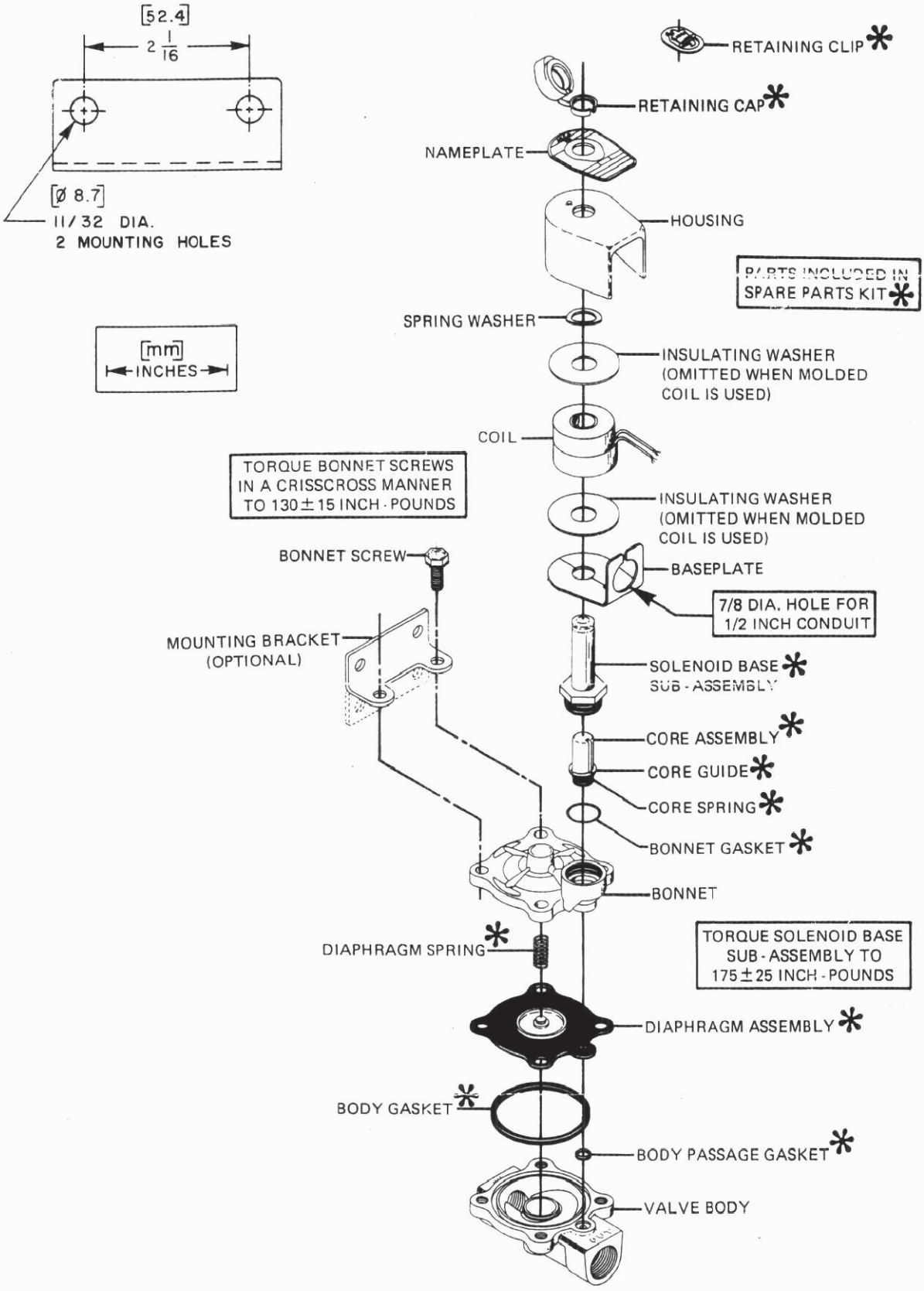

Figure 1.

Bulletin 8210

Torque Chart

Part Name	Torque Value in Inch-Pounds	Torque Value in Newton-Meters
Solenoid Base Sub-Assembly	175 ± 25	19,8 ± 2,8
Bonnet Screws	100 ± 10	11,3 ± 1,1

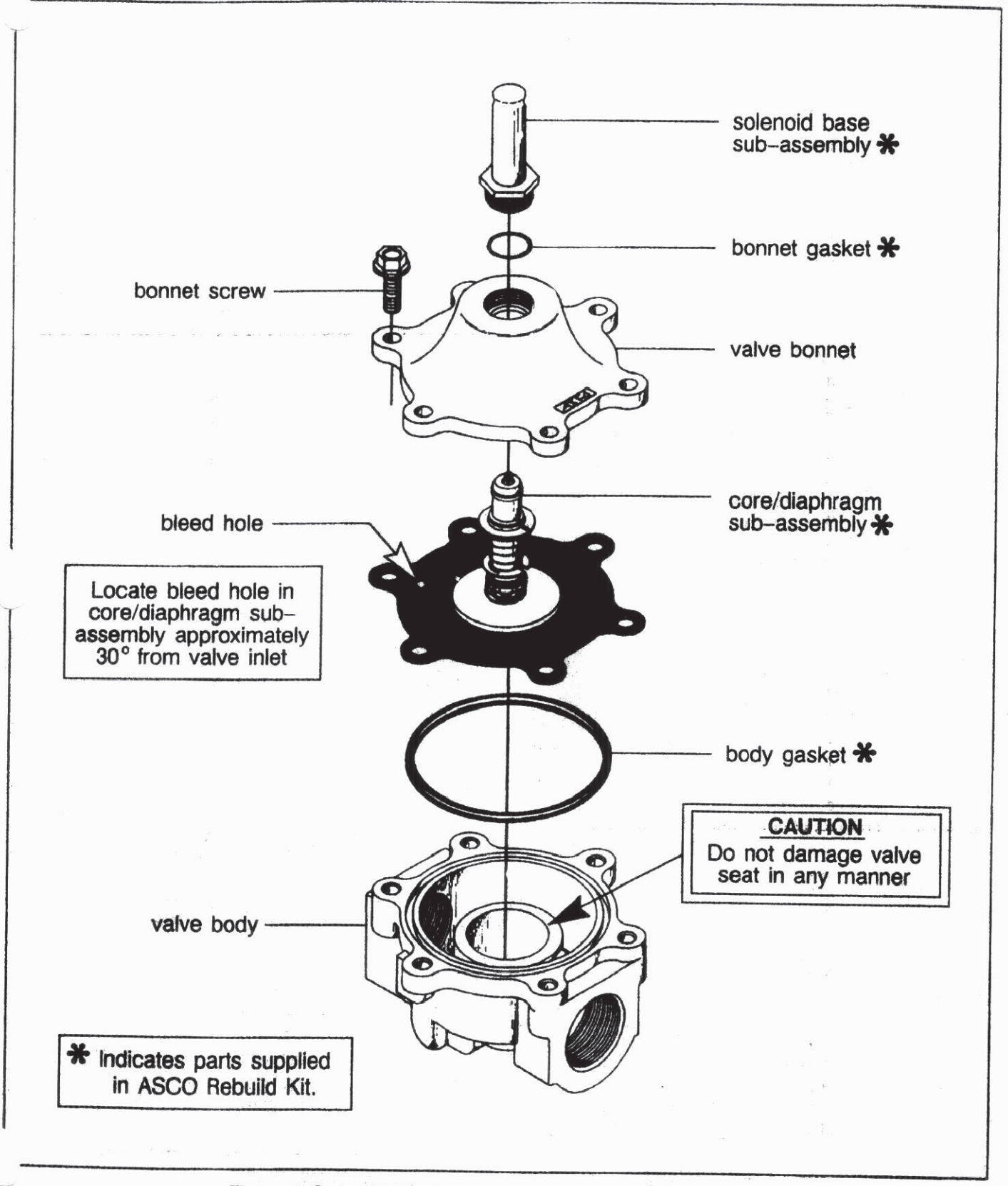

Figure 1. Series 8215 valves without solenoid, AC Construction.

Torque Chart

Part Name	Torque Value in Inch-Pounds	Torque Value in Newton Meters
Solenoid Base Sub-Assembly	175 ± 25	19,8 ± 2,8
Bonnet Screws	100 ± 10	11,3 ± 1,1

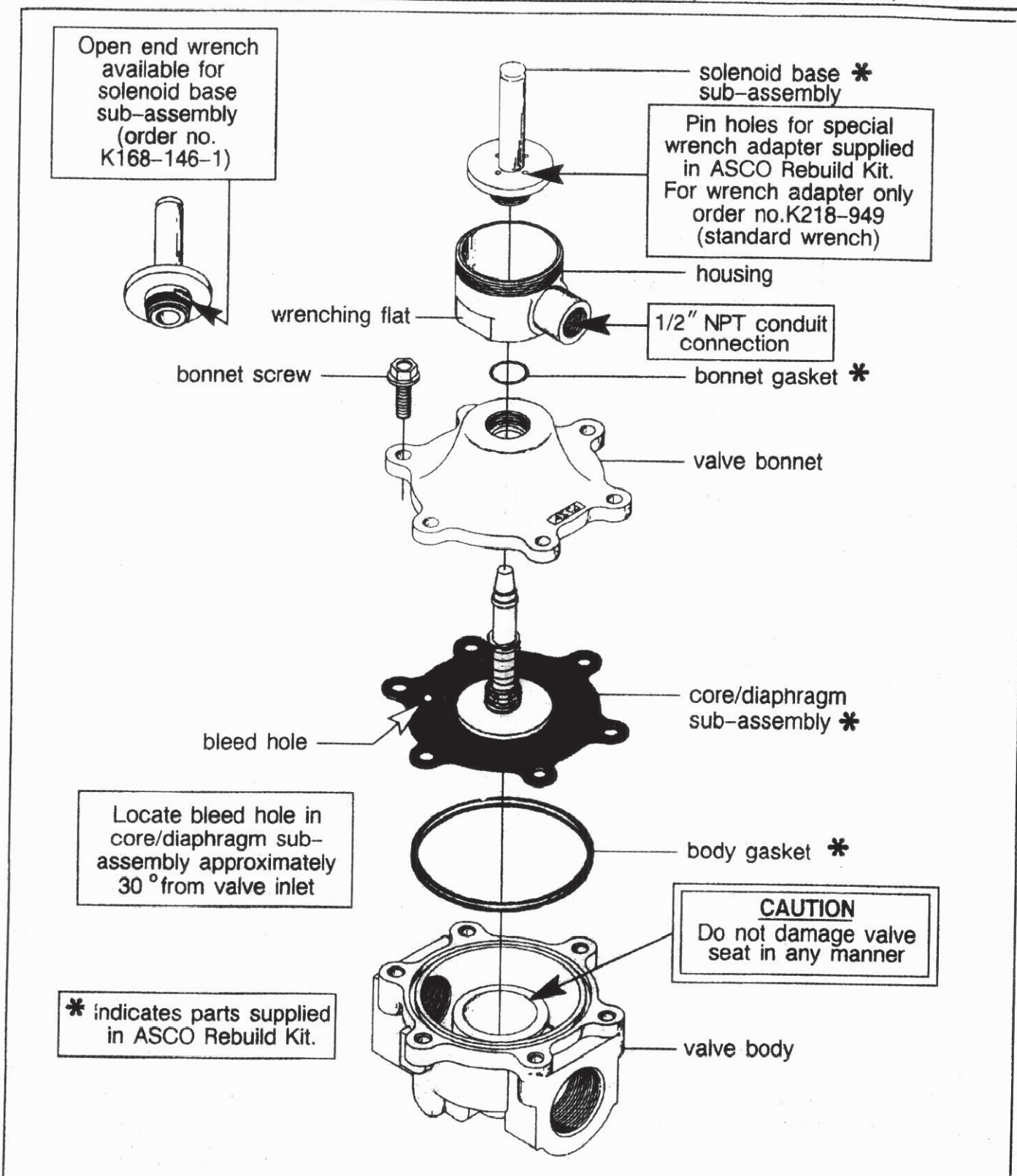

Figure 2. Series 8215 valves without solenoid, DC Construction.

Installation & Maintenance Instructions

GENERAL PURPOSE AND RAINTIGHT/WATERTIGHT/EXPLOSIONPROOF SOLENOIDS

SERIES 8017

Form No.V5381R6

IMPORTANT: See separate valve installation and maintenance instructions for information on: Operation, Positioning, Mounting, Cleaning, Preventive Maintenance, Causes of Improper Operation, Disassembly and Reassembly of basic valve.

DESCRIPTION

Solenoid Catalog Numbers 80171 and 80172 have a Type 1, General Purpose Solenoid Enclosure. Solenoid Catalog Numbers EF80171, EF80172, 80173, and 80174 meet the requirements of Enclosure Type 3 – Raintight, Type 7 (C & D) Explosionproof, and Type 9 (E, F, & G) Dust – Ignitionproof. When constructed with a cover gasket and solenoid bonnet gasket they also meet the requirement of Enclosure Type 4 – Watertight. Series 8017 solenoids (when installed as a solenoid and not as part of an ASCO valve) are supplied with a core which has a 0.250–28 UNF–2B tapped hole, with 0.38 inch minimum full thread.

OPERATION

When the solenoid is energized, the core is drawn into the solenoid base sub–assembly.

IMPORTANT: When the solenoid is de–energized, the initial return force for the core, whether developed by spring, pressure, or weight, must exert a minimum force to overcome residual magnetism created by the solenoid. Minimum return force for AC construction is 1 pound, 12 ounces and 5 ounces for DC construction.

INSTALLATION

Check nameplate for correct catalog number, voltage, frequency, wattage, and service.

Enclosure Types 3, 4, 7, and 9

⚠ CAUTION: To prevent fire or explosion, do not install solenoid enclosure and/or valve where ignition temperature of hazardous atmosphere is less than 160° C. On valves used for steam service or when a class "H" solenoid is used, do not install in hazardous atmosphere where ignition temperature is less than 180°C. See nameplate for service.

Enclosure Types 3,4,7, and 9 Used in –40°C Ambient Temperature Applications

⚠ WARNING: To prevent fire or explosion, use only conduit runs 1/2″ in size with a sealing fitting connected within 3 feet of the solenoid enclosure.

IMPORTANT: To protect the solenoid operator or valve, install a strainer or filter, suitable for the service involved in the inlet side as close to the valve or operator as possible. Clean periodically depending on service conditions.

Positioning

This solenoid is designed to perform properly when mounted in any position. However, for optimum life and performance, the solenoid should be mounted vertically and upright to reduce the possibility of foreign matter accumulating in the solenoid base sub–assembly area.

Wiring

Wiring must comply with local codes and the National Electrical Code.

⚠ CAUTION: Do not use the solenoid enclosure as a splice box.

The general purpose solenoid housing has a 7/8″ diameter hole to accommodate 1/2″ conduit. To facilitate wiring, the general purpose solenoid enclosure may be rotated 360° by removing the retaining cap or clip.

⚠ CAUTION: When metal retaining clip disengages, it will spring upward. Rotate solenoid enclosure to desired position. Then replace retaining cap or clip before operating. On some solenoids, a grounding wire which is green or green with yellow stripes is provided. Use rigid metallic conduit to ground all enclosures not provided with a green grounding wire. For the raintight/watertight/ explosionproof solenoid enclosure, electrical fittings must be approved for use in hazardous locations. This enclosure has a 1/2″ conduit connection and may be rotated 360° to facilitate wiring.

⚠ WARNING: To prevent the possibility of personal injury or property damage from accidental disengagement of solenoid from valve body, hold housing securely by wrenching flats while removing or replacing housing cover.

To rotate enclosure, loosen housing cover using a 1″ socket wrench. Two wrenching flats are provided on the housing to hold it securely in place while the cover is being loosened or tightened. Rotate housing to desired position and tighten cover before operating. Torque cover to 135 ± 15 in–lbs [15,3 ± 1,7 Nm].

NOTE: Alternating current (AC) and direct current (DC) solenoids are built differently. To convert from one to the other, it is necessary to change the complete solenoid including the core and solenoid base sub–assembly, not just the coil. Consult ASCO.

Solenoid Enclosure Assembly

Solenoid Catalog Numbers 80171 and 80172 may be assembled as a complete unit. Tightening is accomplished by means of a hex flange at the base of the solenoid enclosure.

Solenoid Catalog Numbers EF80171, EF80172, 80173, and 80174 must be assembled in the following manner:

1. The solenoid enclosure must be completely disassembled. For disassembly, see the instructions given in ***Coil Replacement*** section.
2. After disassembly, the solenoid base sub–assembly is placed inside the housing over the assembly location.
3. The assembly is then tightened in place by means of two (2) slots in the bonnet adjacent to the tube on the solenoid base sub–assembly. Use special adapter wrench provided with solenoid. For ASCO wrench kit only, Order No.K218950. Exercise care during tightening procedure to prevent deforming or raising of bonnet surface adjacent to slots.
4. Reassemble solenoid,follow instructions in ***Coil Replacement*** section.

Solenoid Temperature

Standard solenoids are supplied with coils designed for continuous duty service. When the solenoid is energized for a long period, the solenoid enclosure becomes hot and can be touched by hand only for an instant. This is a safe operating temperature. Any excessive heating will be indicated by the smoke and odor of burning coil insulation.

MAINTENANCE

⚠ WARNING: To prevent the possibility of personal injury or property damage, turn off electrical power, depressurize solenoid operator or valve, and vent fluid to a safe area before servicing.

Cleaning

All solenoid operators and valves should be cleaned periodically. The time between cleaning will vary depending on medium and service conditions. In general, if the voltage to the coil is correct, sluggish valve operation, excessive noise or leakage will indicate that cleaning is required. Clean strainer or filter when cleaning the valve.

Preventive Maintenance

- Keep the medium flowing through the solenoid operator or valve as free from dirt and foreign material as possible.
- While in service, the solenoid operator or valve should be operated at least once a month to ensure proper opening and closing.
- Depending on the medium and service conditions, periodic inspection of internal valve parts for damage or excessive wear is recommended. Thoroughly clean all parts. Replace any parts that are worn or damaged.

© Automatic Switch Co. MCMXCII. All Rights Reserved

ASCO Valves Automatic Switch Co. 50–60 Hanover Road, Florham Park, New Jersey 07932

Causes of Improper Operation

- **Faulty Control Circuit:** Check the electrical system by energizing the solenoid. A metallic *click* indicates loss of power supply. Check for loose or blown fuses, open–circuited or grounded coil, broken lead wires or splice connections.
- **Burned–Out Coil:** Check for open–circuited coil. Replace if necessary. Check supply voltage; it must be the same as specified on nameplate and as marked on the coil.
- **Low Voltage:** Check voltage across the coil leads. Voltage must be at least 85% of nameplate rating.

Coil Replacement for Solenoid Catalog Numbers 80171 and 80172 General Purpose Enclosure

1. Disconnect coil lead wires and grounding wire if present.
2. Remove retaining cap or clip from top of solenoid.

⚠ **CAUTION: When metal retaining clip disengages, it will spring upward.**

3. Remove nameplate (if present), cover, and spring washer (alternate construction only).
4. For AC construction, slip yoke containing coil, sleeves, insulating washers, and grounding wire (if present,) off solenoid base sub–assembly. For DC construction, slip grounding wire (if present), flux washer and coil off the solenoid base sub–assembly.
   NOTE: Insulating washers are omitted when a molded coil is used.
5. Coil is now accessible for replacement.

⚠ **CAUTION: Solenoid must be fully reassembled because the housing and internal parts complete the magnetic circuit. Place an insulating washer at each end of non–molded coil.**

Coil Replacement for Solenoid Catalog Numbers EF80171, EF80172, 80173, and 80174 Raintight/ Watertight/Explosionproof Enclosure

1. Disconnect coil lead wires and grounding wire if present.

⚠ **WARNING: To prevent the possibility of personal injury or property damage from accidental disengagement of solenoid from valve body, hold housing securely by wrenching flats while removing or replacing housing cover.**

2. Unscrew housing cover with cover gasket and nameplate attached. Two wrenching flats are provided to hold the housing securely in place while the cover is being loosened or tightened.
   NOTE: Some older solenoid constructions do not have a cover gasket or solenoid bonnet gasket present.
3. Remove retainer from top of solenoid base sub–assembly.
4. For AC construction, slip yoke containing coil, sleeves, insulating washers, and grounding wire, (if present) off the solenoid base sub–assembly. For DC construction, remove grounding wire (if present), yoke, insulating washer, coil and insulating washer.
   NOTE: Insulating washers are omitted when a molded coil is used.
5. Coil is now accessible for replacement.
6. If additional disassembly is required, unscrew solenoid base sub–assembly using special wrench adapter supplied in ASCO Enclosure or Rebuild Kit. For ASCO wrench kit only, Order No.K218950.
7. Remove solenoid base sub–assembly with solenoid bonnet gasket.
8. Reassemble using exploded view for identification and placement of parts. Before reassembly, see note below for cleaning and greasing requirements.
9. Torque solenoid base sub–assembly to 175 ± 25 in–lbs [19,8 ± 2,8 Nm].
10. Torque housing cover to 135 ± 15 in–lbs [15,3 ± 1,7 Nm].

⚠ **CAUTION: Solenoid must be fully reassembled because the housing and internal parts complete the magnetic circuit. Place an insulating washer at each end of non–molded coil.**

NOTE: Solenoid Catalog Numbers EF80171, EF80172, 80173, and 80174—Installation and maintenance of raintight/watertight/explosionproof equipment requires more than ordinary care to insure safe performance. All finished surfaces of the solenoid are constructed to provide flame–proof seal. Be sure that the surfaces are wiped clean before reassembling. Grease the cover gasket, solenoid bonnet gasket, and the joints of the raintight/watertight/explosionproof solenoid enclosure with DOW CORNING® 111 Compound lubricant or an equivalent high–grade silicone grease. Grease all joints thoroughly including the underside of the solenoid base sub–assembly flange and internal threads of the housing cover.

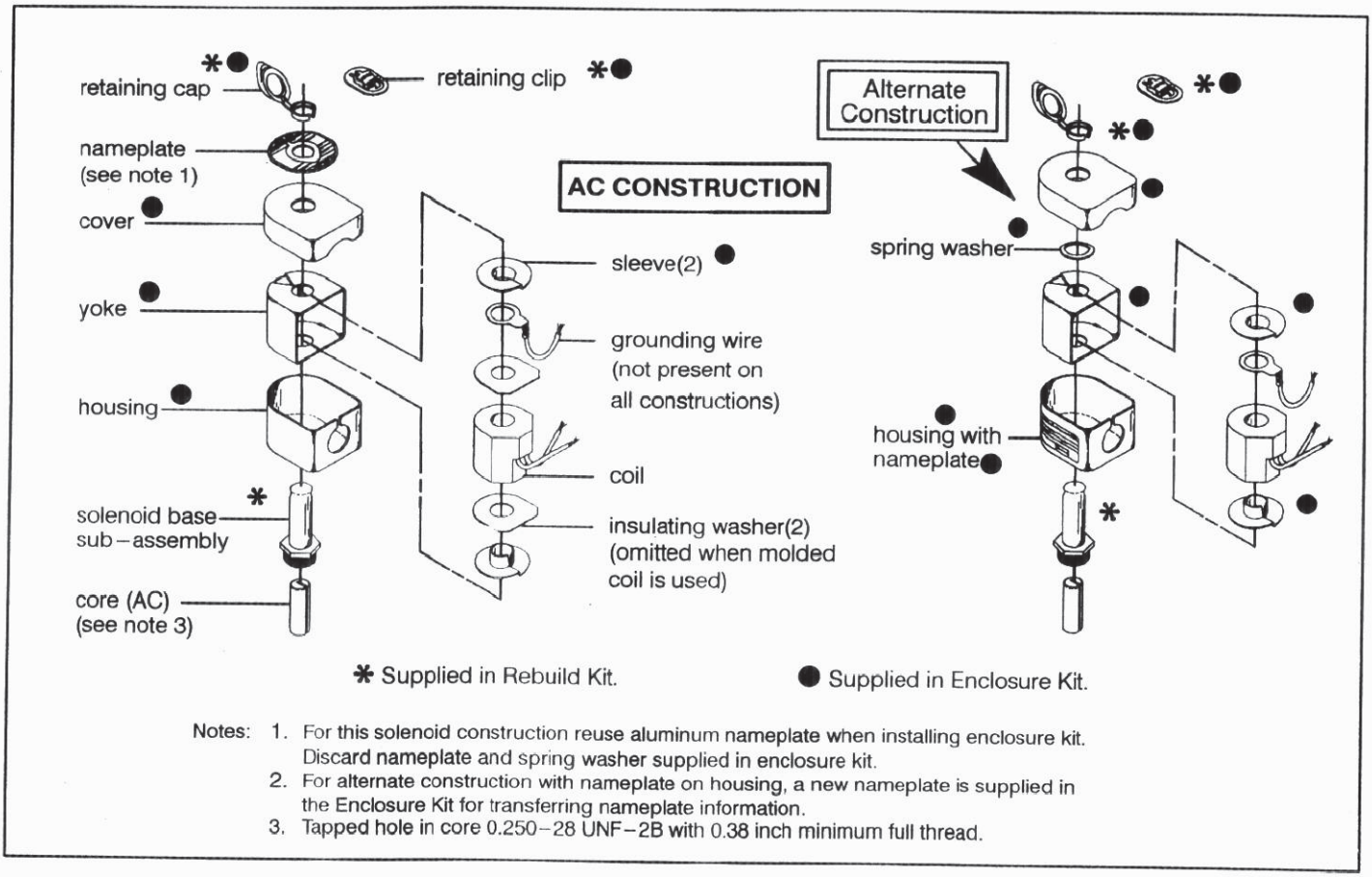

Notes:
1. For this solenoid construction reuse aluminum nameplate when installing enclosure kit. Discard nameplate and spring washer supplied in enclosure kit.
2. For alternate construction with nameplate on housing, a new nameplate is supplied in the Enclosure Kit for transferring nameplate information.
3. Tapped hole in core 0.250–28 UNF–2B with 0.38 inch minimum full thread.

Figure 1. Catalog Nos. 80171 and 80172 General Purpose Solenoid Enclosure, AC Construction.

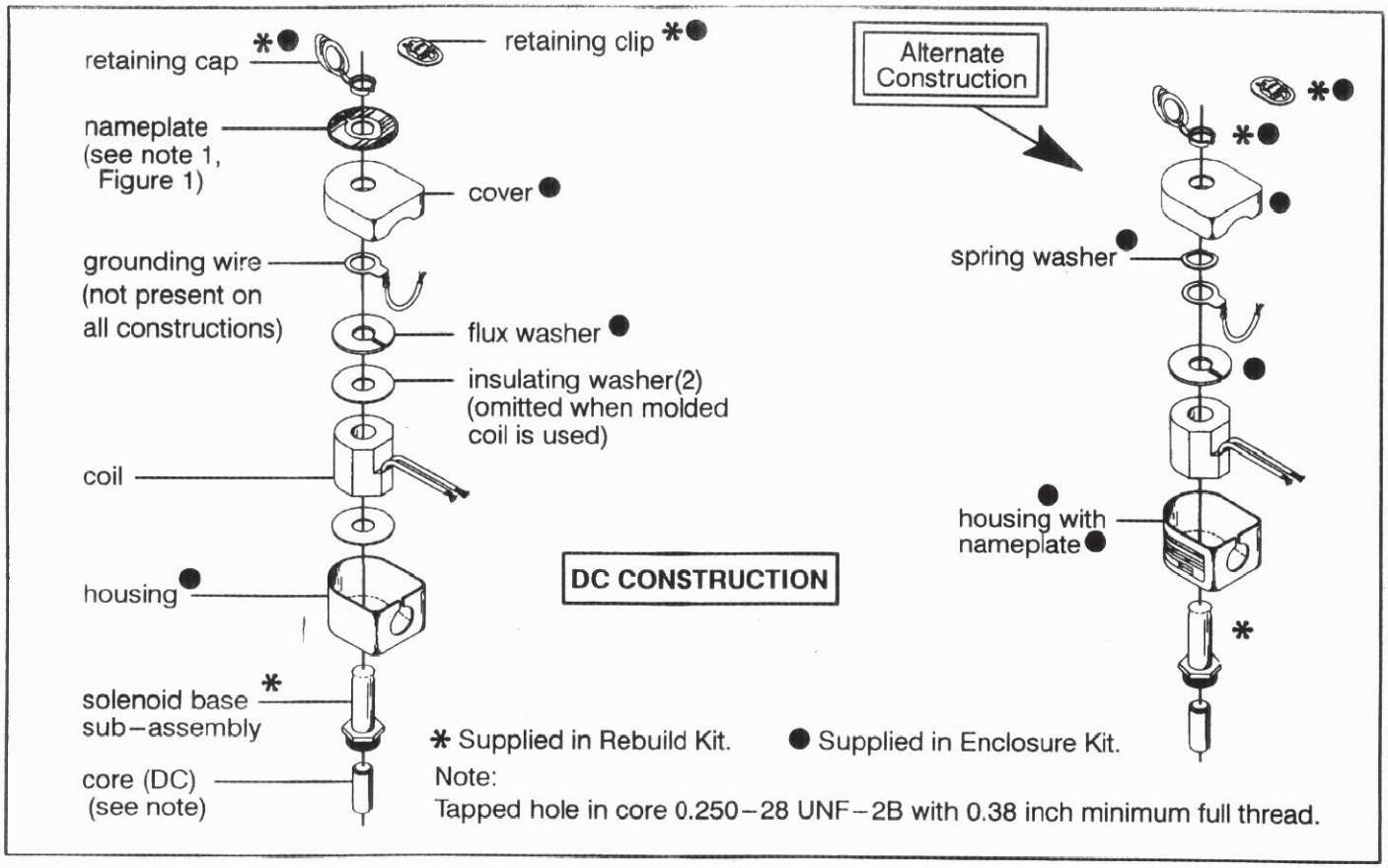

Figure 2. Catalog Nos. 80171 and 80172 General Purpose Solenoid Enclosure, DC Construction.

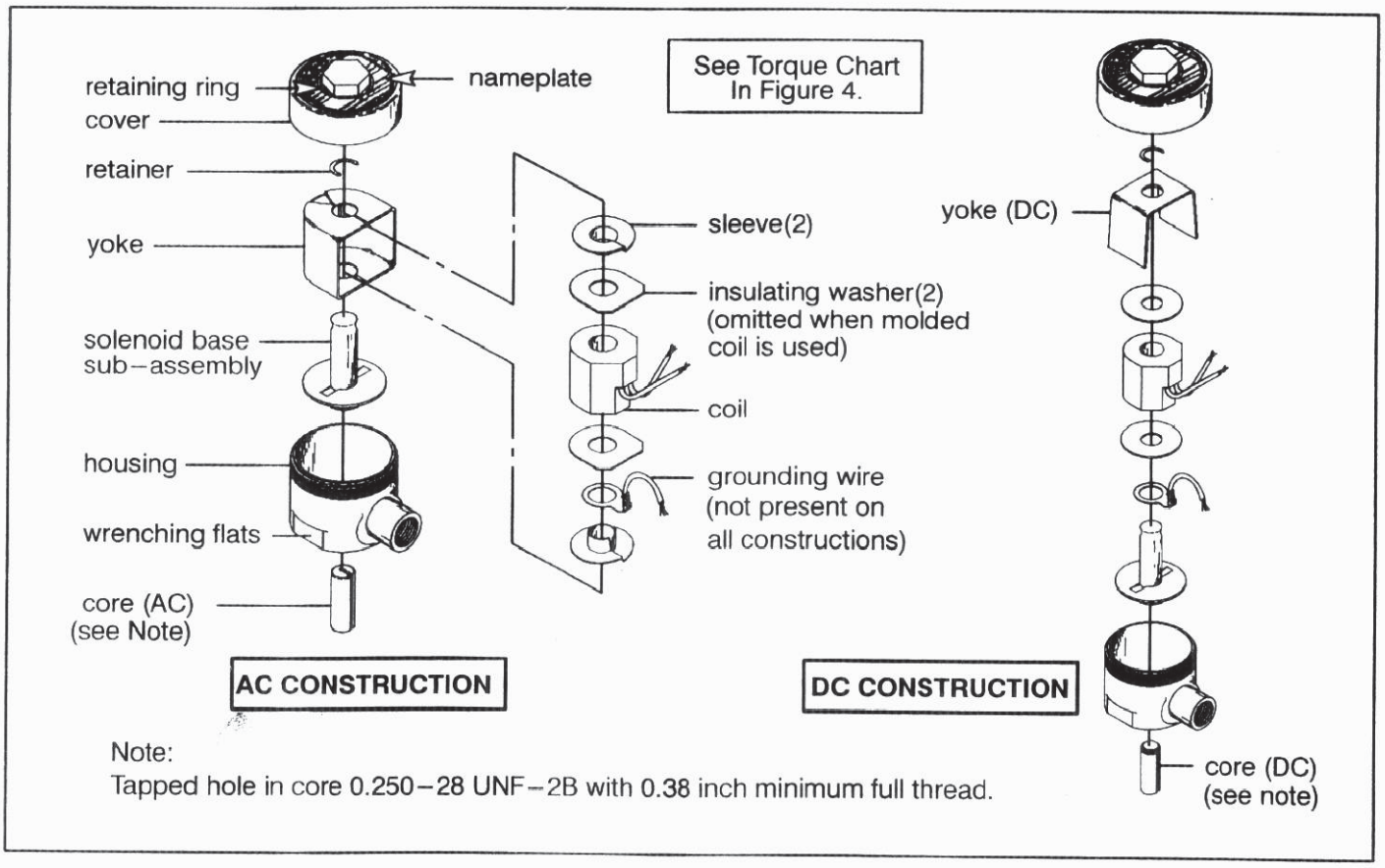

Figure 3. Catalog Nos. EF80171, EF 80172, 80173 and 80174 Raintight/Explosionproof Solenoid Enclosure.

Notes:

1. These Catalog Nos. meet watertight requirements only when cover gasket and solenoid bonnet gasket are used.
2. A solenoid base sub–assembly with a solenoid bonnet gasket are supplied in the Rebuild Kit. These two parts are a direct replacement for the existing solenoid base sub–assembly.
   The cover gasket is also supplied in Rebuild Kit, but may be omitted if cover does not use a gasket.
3. Install all parts supplied in Enclosure Kit except omit the solenoid bonnet gasket if the existing solenoid base sub–assembly does not use a gasket.
4. Tapped hole in core 0.250–28 UNF–2B with 0.38 inch minimum full thread.
5. Special wrench adapter for solenoid base sub–assembly is supplied in Rebuild Kit and Enclosure Kit.

Torque Chart		
Part Name	Inch–Pounds	Newton–Meters
cover	135 ± 15	15,3 ± 1,7
solenoid base sub–assembly ▲	175 ± 25	19,8 ± 2,8

▲ To order special wrench adapter for solenoid base sub–assembly, specify Kit No. K218950

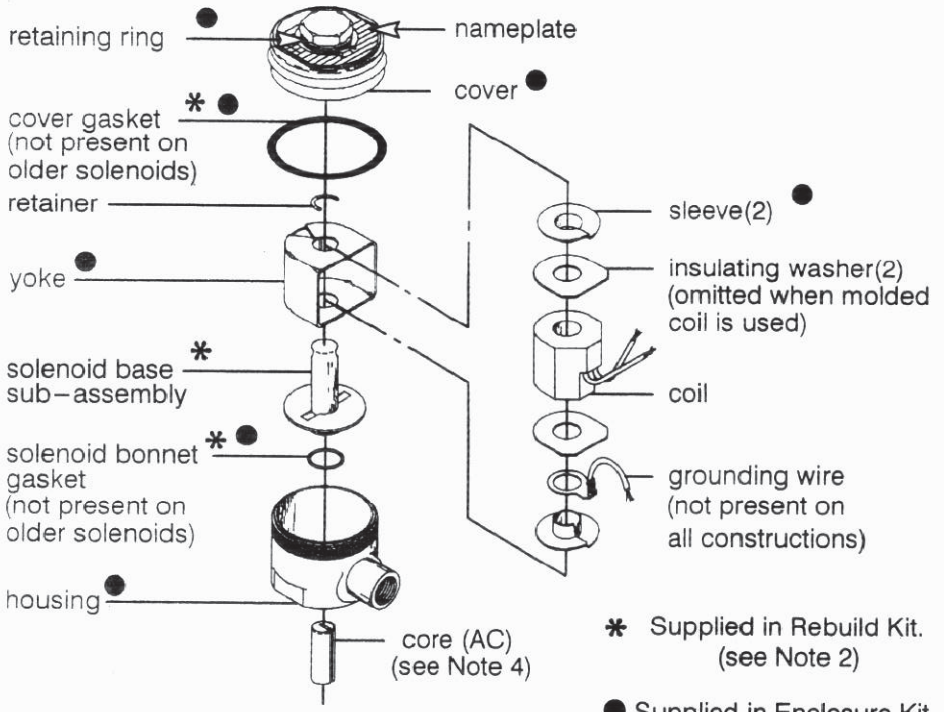

AC CONSTRUCTION

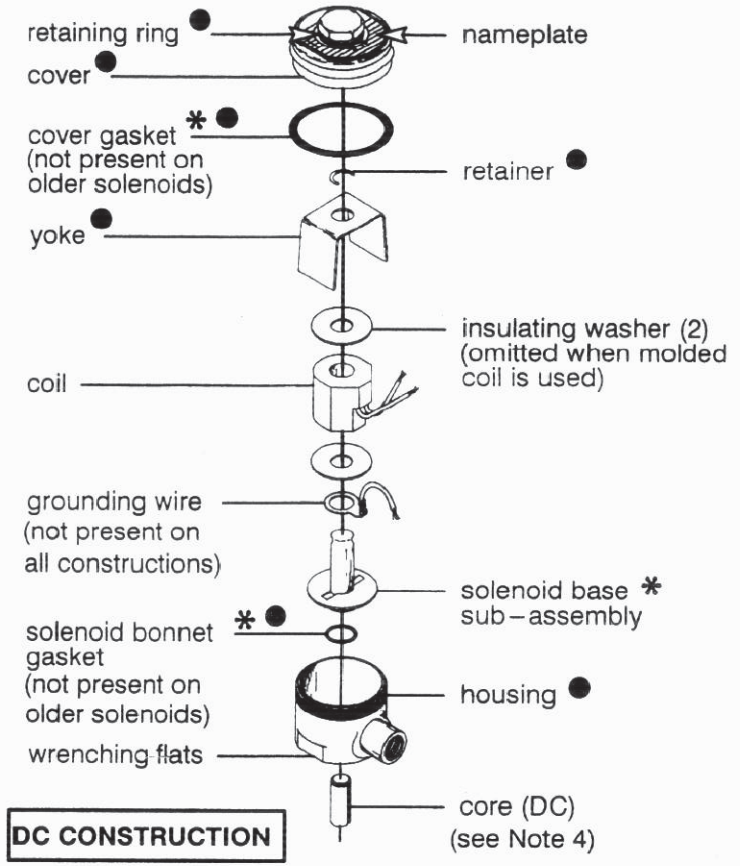

DC CONSTRUCTION

Figure 4. Catalog Nos. EF80171, EF80172, 80173, and 80174 Raintight/Watertight/Explosionproof Solenoid Enclosure.

INSTALLATION AND MAINTENANCE INSTRUCTIONS

TRIPOINT® switches

FIXED DEADBAND COMPACT LINE SWITCHES OPEN FRAME, GENERAL PURPOSE OR WATERTIGHT SWITCH ENCLOSURES

SERIES

PB10, PB11, PB16
PB20, PB21, PB26
PB30, PB31, PB36

Form No. P7034—T88

DESCRIPTION

The Fixed Deadband Compact Line Switch is of rugged aluminum alloy construction. The switch may be provided with a General Purpose NEMA Type 1 Switch Enclosure, a Watertight NEMA Type 3 and 4 Switch Enclosure or an open-frame switch.

The compact line switch may be supplied as a complete unit, that is, the switch assembly unit and transducer are completely assembled or as separate units to be assembled upon installation. The actuation (set) point is adjustable over the full range of the switch. The reactuation (reset) point is fixed relative to the actuation point and cannot be adjusted. The switch assembly can be mated with a wide selection of interchangeable pressure, temperature and mechanical transducers to cover a broad range of pressures, fluids, temperatures and mechanical movements. The switch will control electrical circuits in response to changes in pressure, temperature or mechanical signals.

IMPORTANT: This sheet is designed to cover the installation and use of this switch on pressure transducers, temperature transducers and mechanical transducers. Review this sheet and select the paragraphs that apply to your particular installation and application. Throughout the sheet, the word "signal" will be used in place of pressure, temperature or mechanical changes.

INSTALLATION

Check the nameplate for the correct catalog number, pressure range, temperature range, media and rated over range pressure or temperature. Nameplates are located on side cover and on the bottom of the transducer. Check to be sure the third digit in each number is the same. If not, the unit should not be used. (Refer to Figure 2)

IMPORTANT: All internal adjustments have been made at the factory. Any adjustment, alteration or repair to the internal parts of the switch other than stated herein voids all warranties. Signal setting adjustments required are made by adjusting nut on the top of the switch.

TEMPERATURE LIMITATIONS

Ambient temperature limits are −4°F (−20°C) to 122°F (50°C). To determine fluid temperature limitations, see Form No. P7035 for Pressure Tranducer catalog numbers and construction materials, then refer to chart below.

TRANSDUCER CONSTRUCTION MATERIALS	RATINGS FLUID TEMPERATURE
Buna N or Neoprene	−4°F (−20°C) to 179°F (82°C)
VITON*	−4°F (−20°C) to 250°F (121°C)
316 Stainless Steel	50°F (−45°C) to 300°F (149°C)
All Nylon	Maximum 179°F (82°C)
All Nylon For Water Service	Maximum 130°F (55°C)

For steam service, the fluid temperature with a pigtail (siphon tube or condensate loop) installed directly into the transducer will be below 179°F (82°C).

ASSEMBLY OF SWITCH AND TRANSDUCER UNITS (Refer to Figure 2)

IMPORTANT: The switch unit and transducer unit may be provided as a complete assembly or as separate units. If separate units are provided, refer to Form No. P7035 for a complete listing of switch unit and transducer unit combinations. Form No. P7035 is provided to insure that the proper switch unit be assembled to the proper transducer unit.

Pay careful attention to exploded view provided in Figure 2 for assembly of switch unit and transducer unit. Proceed in the following manner:

1. CAUTION: The third digit in the catalog number on both the switch unit and the transducer unit must be identical. If not, do not assemble to each other. If the same, proceed.
2. Remove bolts (4) from base of switch unit. On general purpose and watertight constructions, remove switch cover.
3. Remove instruction label and pressure, temperature or mechanical switch range scale from the transducer unit.
4. Place transducer unit on base of switch unit and assemble. Start bolts (4) approximately two turns by hand to avoid the possibility of cross threading. After initial engagement, torque bolts (4) in a crisscross manner to 80 ± 10 inch-pounds.
5. Remove backing paper from range scale and install on the front of the switch body over the opening for the adjusting indicator point.

POSITIONING

Switch may be mounted in any position.

MOUNTING

For mounting dimensions for open-frame switch, refer to Figure 2. For mounting dimensions for general purpose switch enclosures, refer to Figure 3. For all switches, an optional mounting bracket is available. For mounting bracket dimensions, refer to Figure 6.

PIPING/TUBING (PRESSURE TRANSDUCER)

Adequate support of piping and proper mounting of switch should be made to avoid excessive shock or vibration. To minimize the effect of vibration on a switch, mount perpendicular to vibration. Connect piping or tubing to switch at base of transducer. It is recommended that flexible tubing be used whenever possible. Apply pipe compound sparingly to male pipe threads only. If applied to transducer threads, it may enter the transducer and cause operational difficulty. Pipe strain on switch should be avoided by proper support and alignment of piping. When tightening pipe, do not use switch as a lever. Wrenches applied to transducer body or piping are to be located as close as possible to connection point. **IMPORTANT: For steam service, install a condensate loop (pigtail or steam syphon tube) directly into the pressure transducer.**

CAUTION: To avoid damage to the transducer body, DO NOT OVERTIGHTEN PIPE CONNECTIONS. If TEFLON* tape, paste or similar lubricant is used, use extra care due to reduced friction.

IMPORTANT: To eliminate the effect of undesirable pressure fluctuations in the system, install a surge suppressor.

WIRING

Wiring must comply with local codes and the National Electrical Code. The general purpose switch enclosure is provided with a 7/8" diameter hole to accommodate 1/2" electrical hub or connector. It is recommended that a flexible conduit connection be used. If rigid conduit is used, do not consider it or use it as a means of supporting (mounting). For watertight switch enclosures, a watertight conduit hub must be installed in the 7/8" diameter hole; use conduit hub Part No. PP01 or equivalent. **IMPORTANT: Electrical load must be within range stated on nameplate. Failure to stay within the electrical range of the switch rating may result in damage to or premature failure of the electrical switch. Use No. 14 AWG copper wire rated for 60°C minimum. CAUTION: Do not exert excessive screwdriver force on snap switch when making terminal connections. When connections are made, be sure there is no stress on the wire leads. Either condition may cause malfunction of switch.**

Electrical Ratings For Standard & Suffix J or K Switches

Ratings for Limit Controls and Pressure Operated Switches:	Ratings for Industrial Controls and Temperature Indicating and Regulating Equipment:
5 Amps Res., 125 or 250 VAC 1/8 HP or 90 Watts, 125 VAC 1/4 HP or 180 Watts, 250 VAC 1/2 Amp Res., 125 VDC 1/4 Amp Res., 250 VDC	15 Amps Res., 125 VAC 10 Amps Res., 250 VAC 1/8 HP or 90 Watts, 125 VAC 1/4 HP or 180 Watts, 250 VAC 1/2 Amp Res., 125 VDC 1/4 Amp Res., 250 VDC

SCHEMATIC FOR STANDARD AND SUFFIX "J" SWITCHES

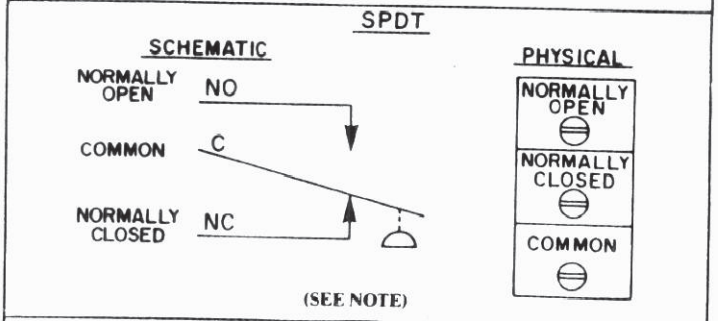

SCHEMATIC FOR SUFFIX "K" SWITCH (OPTIONAL)
DOUBLE POLE DOUBLE THROW

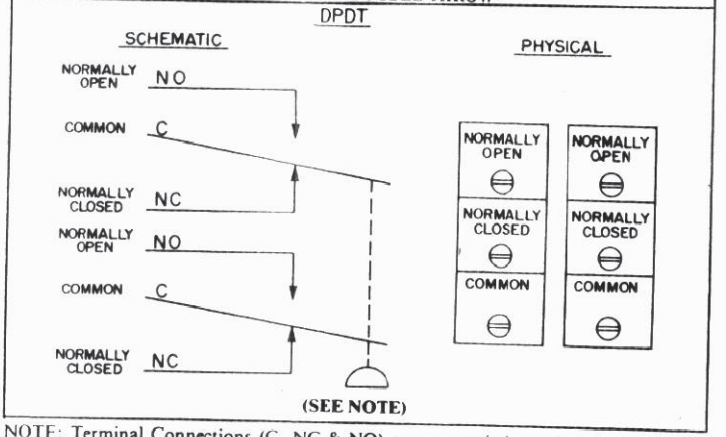

NOTE: Terminal Connections (C, NC & NO) on snap switch are located differently then shown in schematic above. Common "C" is located at the bottom. Normally Closed "NC" is located in the center. Normally Open "NO" is located at the top.

*DuPont Co. Registered Trademark

Form No. P7034 PRINTED IN MEXICO 1978 Automatic Switch Co. FLORHAM PARK, NEW JERSEY 07932

© Automatic Switch Co. 1978 ALL RIGHTS RESERVED

2011 Service Manual Rev. A

INSTALLATION OF TEMPERATURE TRANSDUCERS
(Refer to Figure 5)

DIRECT PROBE

The Direct Probe (local) Temperature Transducer is provided with 1/2 inch N.P.T. connection. When installing, do not use switch unit as a lever for tightening. Use wrenching flats provided at base of transducer for tightening.

CAPILLARY AND BULB

The Capillary and Bulb (remote) Temperature Transducers are provided with a length of capillary and a 3/8 inch diameter sensing bulb. CAUTION: Do not bend capillary at sharp angles. For proper operation, be sure sensing bulb is completely immersed in fluid and not in contact with heating element or anything that would directly affect the temperature of the fluid being sensed.

THERMAL WELL (Optional Feature)

A Thermal Well may be used for Capillary and Bulb (remote) or Direct Probe (local) Temperature Transducers. The thermal well affords protection for the sensing bulb and allows removal of the sensing bulb while maintaining a pressure-tight vessel. When installing sensing bulb in thermal well, be sure that it is fully inserted. Where a thermal well already exists, jam nuts may be obtained to adapt the capillary and bulb to the existing thermal well. The existing thermal well must be for a 3/8 diameter sensing bulb.

UNION CONNECTOR (Optional Feature)

A union connector will allow direct mounting of the sensing bulb in the fluid being contr[illegible]. Install union into piping connection before tightening union onto bulb. For maximum performance, the bulb should be inserted in the union connection so that the end of the sensing bulb is even with the end of the union connector nut. Do not apply excessive torque when tightening union connector nut.

ADJUSTMENT (SIGNAL SETTING) OF FIXED DEADBAND SWITCH

To make adjustments, (signal setting) a 1/4 inch wrench and a pressure or temperature gage (within suitable range) are required. If electrical connection (to line of final application) of the switch is not desirable, a battery powered test lamp or ohm meter may be used. Pressure, temperature or mechanical range scales should be used for initial signal setting. These will be accurate within 5%. Adjust switch until pointer is in the middle of the solid red line below the desired range. For exact signal setting, proceed as follows:

ADJUSTMENT (SIGNAL SETTING) OF NORMALLY CLOSED AND NORMALLY OPEN FIXED DEADBAND SWITCH, INCREASING SIGNAL (Refer to Figure 1)

1. If the fixed deadband switch is in the line of final application when adjustment (signal setting) is made, be sure switch can be test operated without affecting other equipment.
2. On general purpose and watertight constructions, remove switch cover.
3. Turn adjustment nut until signal setting indicator is fully up. Use a 1/4 inch wrench for adjusting nut. **CAUTION: Adjusting nut will turn easily until it hits a stop. Do not over torque; over torquing may cause damage.**
4. Follow steps in chart below to make signal setting.

Steps of Adjustment	Normally Closed		Normally Open	
	Electrical Connection To Switch	Position Of Test Lamp On-Off	Electrical Connection To Switch	Position Of Test Lamp On-Off
1. Starting with zero signal connect test lamp to common and . . .	Normally Closed Terminal	On	Normally Open Terminal	Off
2. Apply desired actuation signal. Then back off signal adjusting nut until switch actuates.	Normally Closed Terminal	Off (Switch Open)	Normally Open Terminal	On (Switch Closed)
3. Lower signal to check reactuation signal.	Normally Closed Terminal	On (Switch Closed)	Normally Open Terminal	Off (Switch Open)

5. Cycle between actuation and reactuation signals and make minor adjustment to nut as required to achieve the exact signal setting.
6. After setting has been made, make permanent electrical connections. **WARNING: Be sure power is off when electrical connections are made.**

ADJUSTMENT (SIGNAL SETTING) OF NORMALLY CLOSED AND NORMALLY OPEN FIXED DEADBAND SWITCH, DECREASING SIGNAL (Refer to Figure 1)

1. If the fixed deadband switch is in the line of final application when adjustment (signal setting) is made, be sure switch can be test operated without affecting other equipment.
2. On general purpose and watertight constructions, remove switch cover.
3. Turn adjustment nut until signal setting indicator is fully down. Use a 1/4 inch wrench for adjusting nut. **CAUTION: Adjusting nut will turn easily until it hits a stop. Do not over torque; over-torquing may cause damage.**
4. Follow steps in the chart below to make signal setting.

Steps of Adjustment	Normally Closed		Normally Open	
	Electrical Connection To Switch	Position Of Test Lamp On-Off	Electrical Connection To Switch	Position Of Test Lamp On-Off
1. Starting with initial signal above desired actuation setting, connect test lamp to common and . . .	Normally Closed Terminal	Off	Normally Open Terminal	On
2. Decrease signal to desired actuation signal. Then advance signal adjusting nut until switch actuates.	Normally Closed Terminal	On (Switch Closed)	Normally Open Terminal	Off (Switch Open)
3. Increase signal to check reactuation signal.	Normally Closed Terminal	Off (Switch Open)	Normally Open Terminal	On (Switch Closed)

5. Cycle between actuation and reactuation signals and make minor adjustment to nut as required to achieve the exact signal setting.
6. After setting has been made, make permanent electrical connections. **WARNING: Be sure power is off when electrical connections are made.**

TESTING OF INSTALLATION

If the adjustment of the switch has been made outside of the line of final application, the switch should be retested when installed in the line of final application. Follow adjustment instructions. Be sure switch can be test operated without affecting other equipment.

MAINTENANCE

WARNING: Turn off electrical power supply and line pressure to switch before removal or inspection.

IMPORTANT: Repair of the switch shall never be attempted in the field. The switch must be returned to the factory (Automatic Switch Company, Florham Park, New Jersey) or serviced only by an authorized factory representative. Address all service inquires to Automatic Switch Company, 50-56 Hanover Road, Florham Park, New Jersey 07932. The only adjustment which may be performed on the switch is changing the position of signal setting adjusting nut and replacement of the transducer unit. Replacement of transducer should be done if external leakage is evident.

PREVENTIVE MAINTENANCE

1. While in service, operate (cycle between two desired signals) the fixed deadband switch at least once a month to insure proper operation. If necessary, electrical wiring and pipe connection should be made so that switch can be test operated without affecting other equipment.
2. Periodic inspection of the switch, external surfaces only, should be carried out. Switch should be kept clean and free from paint, foreign matter, corrosion, icing and freezing conditions.
3. Keep the medium entering the switch as free from dirt and foreign material as possible.

IMPROPER OPERATION

Switch will not actuate or actuates and reactuates undesirably.

1. **Incorrect Electrical Connection:** Check leads to switch. Be sure they are properly connected. Switch is marked "NO" for Normally Open, "NC" for Normally Closed and "C" for Common.
2. **Faulty Control Circuit:** Check electrical power supply to switch. Check for loose or blown-out fuses, open-circuited or grounded wires, loose connections at terminal block or switch. See nameplate for electrical rating and range.
3. **Incorrect Pressure:** Check pressure in system with suitable pressure gage. Pressure must be within range specified on nameplate.
4. **Incorrect Adjustment:** Check adjusting nut for proper setting. Refer to adjustment instructions.
5. **External Leakage:** Check to see that bolts (4) holding transducer to pressure switch are properly torqued (80 ± 10 inch-pounds). If bolts are tight and leakage is still evident, replace transducer. Refer to paragraph on "Assembly of Switch Unit and Transducer Unit."
6. **Excessive Vibration or Surges Causing Switch to Actuate and Reactuate:** Check for fluctuations in system and install pressure surge suppressor. Check switch mounting and be sure there is no excess vibration.
7. **Incorrect Temperature:** Check temperature in system with suitable thermometer. Temperature must be within range specified on nameplate. Check location of capillary and bulb for incorrect mounting. Refer back to paragraphs on "Installation of Temperature Transducers."

If the operation of the fixed deadband switch cannot be corrected by the above means, the entire switch unit should be replaced or an authorized factory representative consulted.

FOR SERVICE, REPLACEMENT OR NEW TRANSDUCER

Consult Factory or Authorized Factory Representative or Distributors

ORDERING INFORMATION

For Fixed Deadband Switch or New Transducer

When Ordering, Specify Catalog Numbers, Fluid, Pressure Range, Temperature Range, Serial Numbers and Maximum Sustained Pressure or Temperature.

NAMEPLATES ARE LOCATED ON SWITCH COVER AND BOTTOM OF TRANSDUCER.

ASCO Automatic Switch Co. FLORHAM PARK, NEW JERSEY 07932 Form No. P7034 PRINTED IN U.S.A. 1978

© Automatic Switch Co. 1978. ALL RIGHTS RESERVED

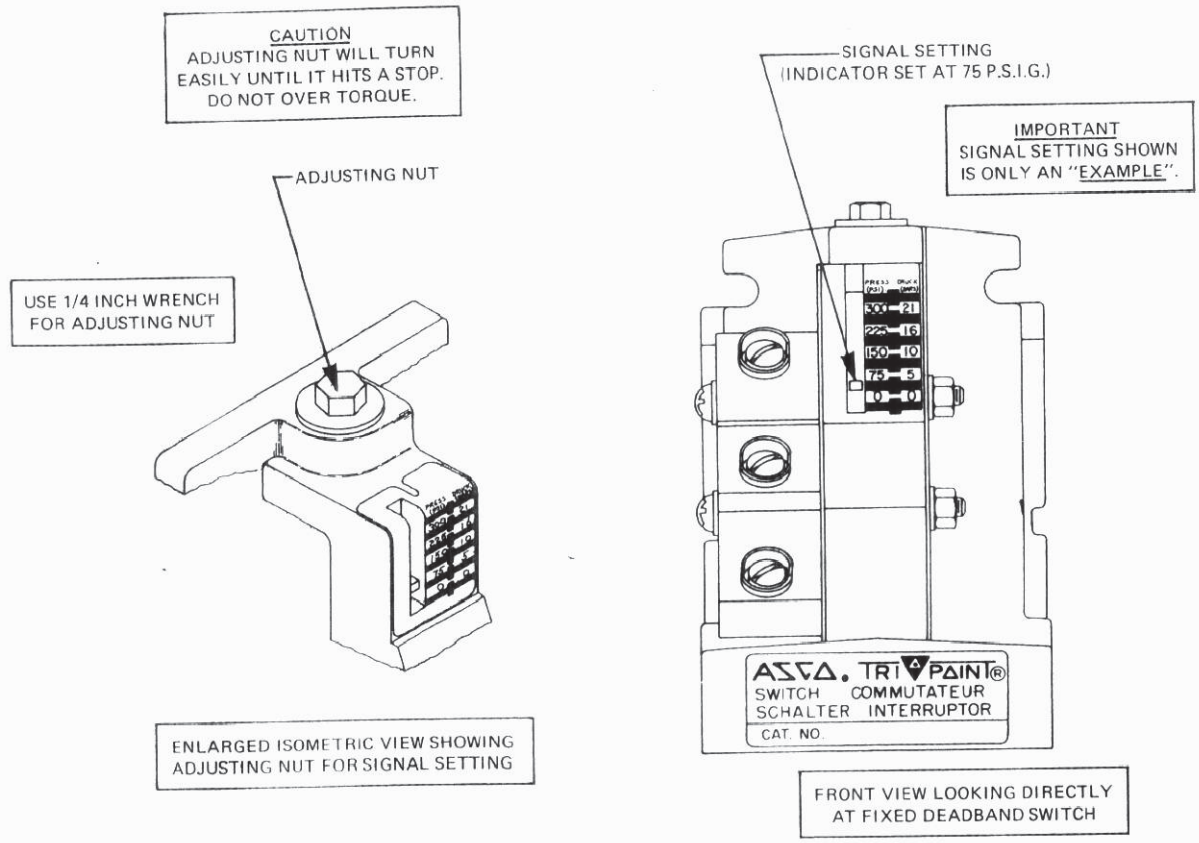

Figure 1. **Adjustment (Signal Setting) of Fixed Deadband Switch**

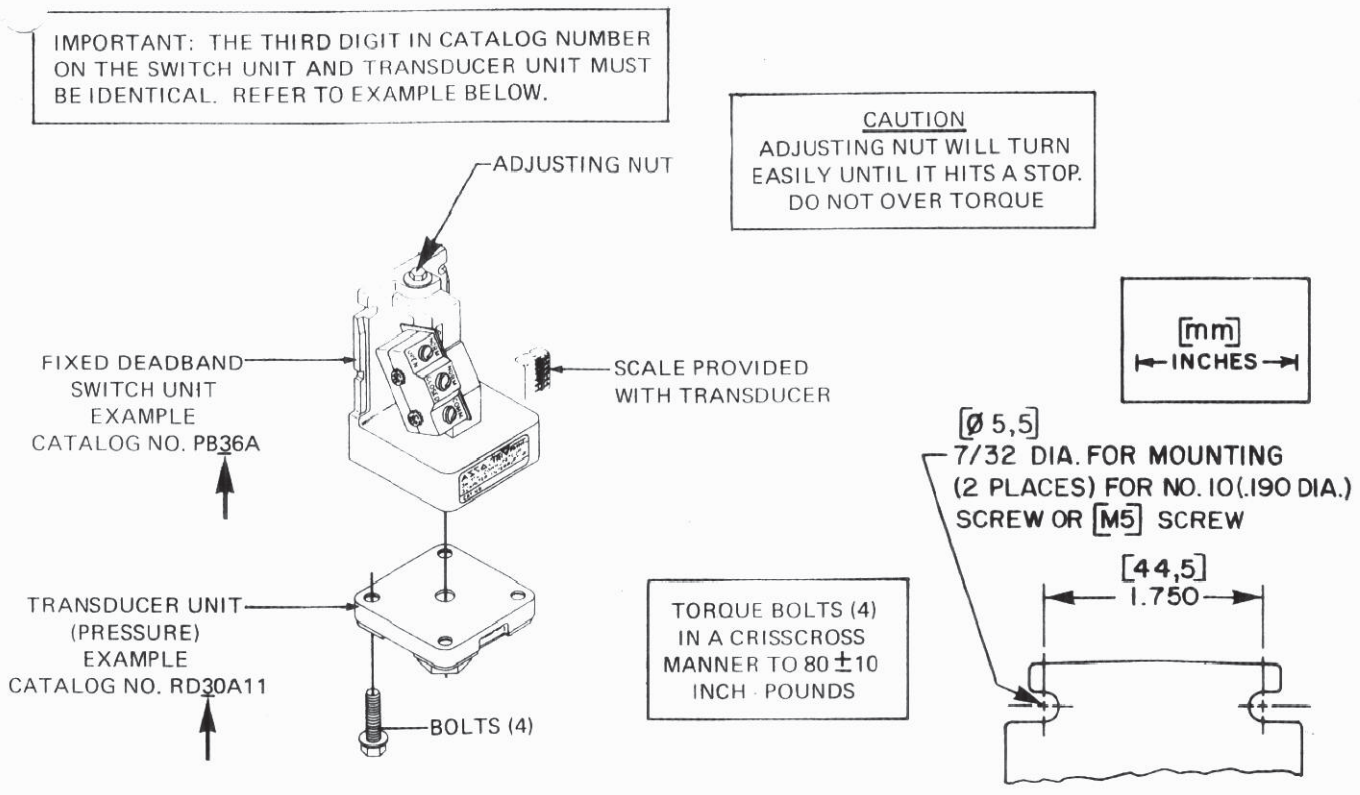

Figure 2. **Open Frame Switch and Mounting Dimensions (Switch Unit and Transducer Unit to be Assembled)**

© Automatic Switch Co. 1978. ALL RIGHTS RESERVED

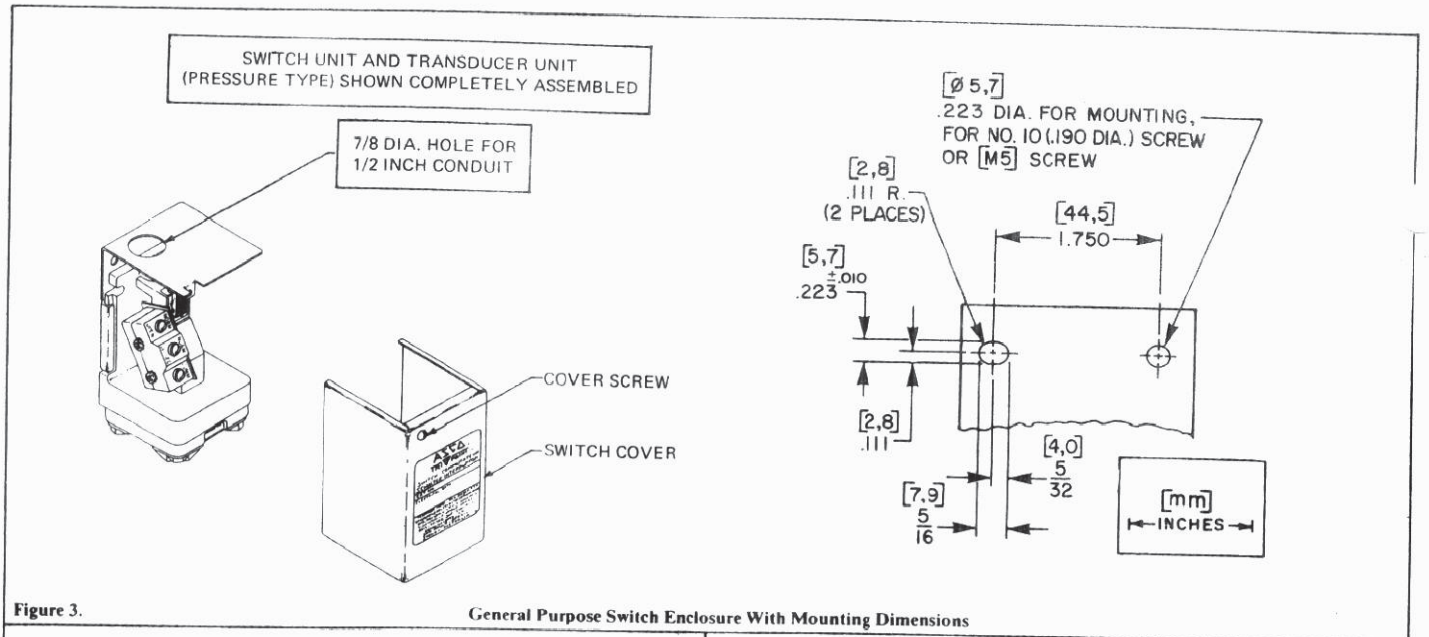

Figure 3. General Purpose Switch Enclosure With Mounting Dimensions

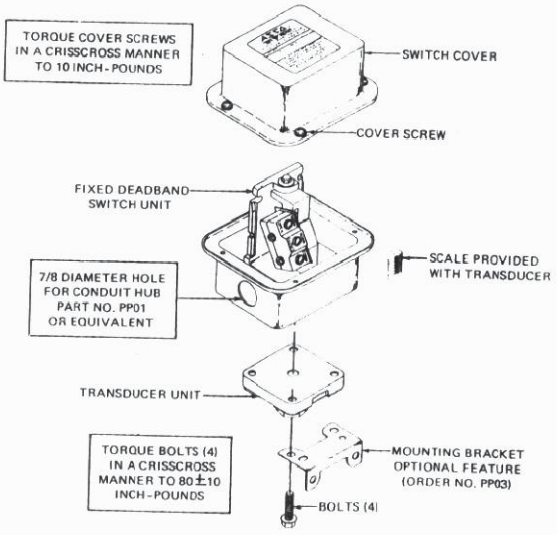

Figure 4. Watertight Switch Enclosure

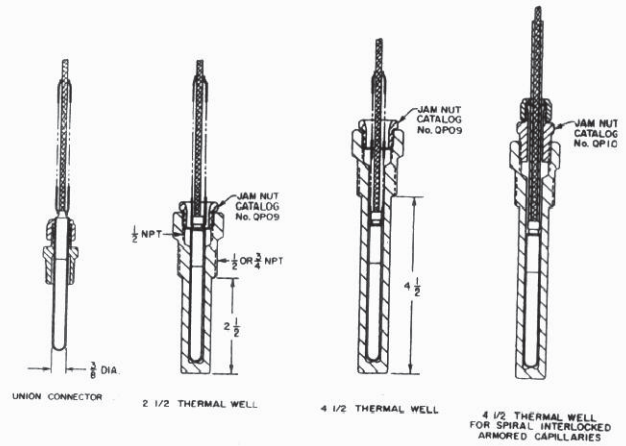

Figure 5. Union Connector and Thermal Wells (Optional Feature)

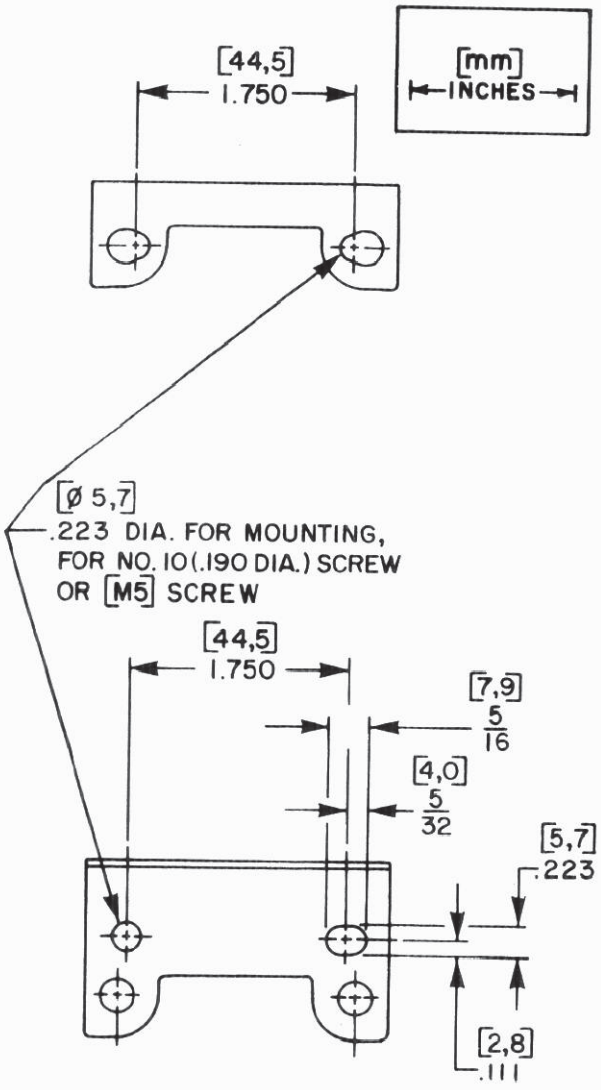

Figure 6. Mounting Bracket (Optional Feature)

© Automatic Switch Co. 1978. ALL RIGHTS RESERVED

ASCO Automatic Switch Co. FLORHAM PARK, NEW JERSEY 07932 Form No. P7034 PRINTED IN U.S.A. 1978

2011 Service Manual Rev. A

MEGR-1630 Instruction Manual

Marshall Excelsior Gas Connections

MEGR-1630 HIGH FLOW GAS REGULATOR

Instruction Manual- **Look Inside For:**

Description
Installation
Overpressure Protection
Startup and Adjustment
Shutdown
Maintenance
Parts Ordering
Parts List



Marshall Excelsior Company
Marshall, MI 49068
269-789-6700
FAX 269-781-8340

www.marshallexcelsior.com

The contents of this publication are for informational purposes only. While every effort has been made to ensure accuracy, these contents are not to be construed as warranties or guarantees, expressed or implied, regarding the products or services described herein or for their use or applicability. Marshall Excelsior Co. reserves the right to modify or improve the designs or specifications of such products at any time without notice. The MEC™ logo is the trademark of Marshall Excelsior Co.

Form #909 Rev A

DESCRIPTION:

MEGR-1630 is a spring loaded, self operated pressure regulator for use with inlet pressures as high as 1500 PSIG and outlet pressures between 3 and 500 PSIG.

INSTALLATION:

Qualified personnel only should perform installation, operation and maintenance in accordance with NFPA 54 & 58 and other local, State and Federal Regulations.

WARNING!

Over-pressurizing the regulator or any of its adjacent piping could cause equipment damage, property damage, or personal injury as a result of the bursting of any of the pressure containing parts. It is highly recommended that a pressure limiting device (usually required by an appropriate code, regulation, or standard) be installed to prevent operating conditions from exceeding any limits.

The regulator can be mounted in any position. An arrow on the bonnet, above the nameplate, indicates the proper direction of the flow. Inspect the piping and the regulator for any contaminants before installing. Always apply pipe sealant to the male threads of the piping.

OVERPRESSURE PROTECTION:

The MEGR-1630 pressure regulator has rated outlet pressures that are lower than their rated inlet pressures. Pressure relief devices must be used if either the inlet or outlet pressure can exceed their rated limit. See the tables and notes below for those limits. After any overpressure condition, check the regulator and any piping for damage.

WARNING!

The use of a pressure-relieving device is recommended to ensure that both the inlet and outlet pressures do not exceed their rated limits. Damage to the regulator, or personal injury, could result from an overpressure condition.

Orifice Size	Maximum Inlet Pressure (psig)	Maximum Pressure Differential (psi)
1/8" and 3/16"	1500	1500
1/4"	1500	1000
3/8"	1000	500
1/2"	750	250

Outlet Pressure Range (psig)	Maximum Outlet Pressure (psig) ***Above the Pressure Setting***	Maximum Emergency ***Outlet Pressure (psig)***
27-50	200	550
46-95	200	550
90-150	200	550
200-275	200	550
275-500	200*	550

NOTE: The sum of the outlet pressure and the maximum pressure differential must be greater than the inlet pressure.

CAUTION: The maximum outlet emergency pressure (casing pressure) is 550 psig. This number takes precedence over the maximum outlet pressure above the pressure setting.

VENTS:

The MEGR-1630 pressure regulator is supplied with a screened vent assembly in the 1/4 NPT bonnet vent hole.

WARNING!

The vent should be inspected periodically to insure that it has not become plugged. Make sure the vent remains free from any foreign debris, or weather related contaminants. If the regulator is to be used in an enclosed area, vent lines should be piped to a ventilated area.

START UP:

To start up the regulator, open the upstream shut-off valve allowing gas pressure to enter. The use of gauges to monitor pressures is strongly advised. The outlet pressure range is noted on the nameplate. In the event that the desired pressure setting is outside the rated pressure range of the regulator, substitute the correct range spring. Make sure the nameplate is changed to reflect the new outlet pressure range.

WARNING!

To prevent placing the range spring under excessive stress, always use the correct adjustment screw for the range selected.

Dangerous conditions, which may damage internal components, may result from outlet pressures exceeding the set pressure by more than 200 psig. This excess pressure must never exceed the maximum casing pressure of 550 psig. To prevent overpressure conditions, make certain the new pressure setting does not exceed the limits of the range spring being used. The use of a pressure gauge when making adjustments is strongly recommended.

SHUTDOWN:

Slowly close the upstream shut-off valve and relieve the system of all pressure. The use of pressure gauges is recommended to ensure that there is no upstream or downstream pressure still applied to the regulator or pressure system.

MAINTENANCE:

During the course of the regulator's service it may become necessary to replace or repair certain components.

WARNING!

These procedures are for gaining access to the range spring, diaphragm assembly, and the lever. All spring pressure must be released from the regulator before these steps can be performed. While

following these procedures, refer to the diagram for item number locations unless otherwise directed. Assembly is the reverse of these procedures.

Replacing the Orifice, Valve Disk Assembly and Lever

1. Disconnect the piping from the inlet housing (item 19)
2. Remove 4 screws (item 18) and the housing
3. Remove the orifice (item 22), and the 2 gaskets (item 21)
4. If necessary, disconnect the remote vent pipe
5. Remove the 2 screws that attach the diaphragm housing (item 14) to the inlet body (item 20) and separate
6. Remove the pin (item 16) and slide out the lever (item 15). When replacing the lever, make sure the slot in the lever contacts the connector (item 13).
7. Remove the carrier assembly (item 24) from the inlet body.
8. Using a 3/4" socket wrench, remove the valve disk and holder assembly (item 23).
9. Replace those parts that show wear, and reassemble.

Note: New gaskets (item 17 and 21) should always be installed when rebuilding a MEGR-1630 Regulator.

Replacing the Diaphragm

1. Loosen locknut (item 4) and turn adjustment screw (item 3) counterclockwise until all spring compression is removed.
2. If necessary, disconnect the remote vent pipe.
3. To remove the bonnet (item 6), unscrew the nuts (item 11) and remove the bolts (item 12). NOTE: Nuts will not be present on units with steel enclosures.
4. Separate the diaphragm assembly (items 8,9, 10 and 13) from the lever (item 15) and remove.
5. Unscrew the screw (item 8) from the connector assembly (item 13).
6. Install the new diaphragm, being certain that it is centered, and reassemble.

NOTE: Be careful not to twist the diaphragm/lever attachment during assembly. When installing the bonnet, install the screws finger tight, turn the adjusting screw clockwise to slightly compress the spring and take up any slack in the diaphragm, then finish tightening the screws and nuts.

Table 1

Spring Range (psig)	Adjusting Screw	Spring Color Code
27-50	Specify Spring Range when Ordering	Red Stripe
46-95		Olive Drab
90-150		Silver
150-200		Green Stripe
200-275		Blue Stripe
275-500		Yellow Stripe

PARTS LIST	
ITEM	DESCRIPTION
1	Nameplate
2	Drive Screws (4 Req'd)
3	Adjusting Screw (See Table 1)
4	Hex Nut
5	Upper Spring Guide (0-275 psig Pressure Range) Upper Spring Guide (over 275 psig Pressure Range)
6	Bonnet - Iron
7	Spring (See Table #1)
8	Screw
9	Lower Spring Guide (0-275 psig Pressure Range) Lower Spring Guide (over 275 psig Pressure Range)
10	Diaphragm - Neoprene
11	Hex Nut (4 Req'd)
12	Build Screw (4 Req'd)
13	Connector Piston Assembly - Aluminum Trim
14	Diaphragm Housing - Iron
15	Lever Assembly
16	Pin
17	Gasket
18	Build Screw (4 Req'd) 2" Body
19	Inlet Adapter - 2" NPT Iron
20	Body - 2" NPT Iron
21	Body Gaskets (2 Req'd)
22	Orifice - 1/8" Orifice - 3/16" Orifice - 1/4" Orifice - 3/8" Orifice - 1/2"
23	Valve Disk Assembly-Nylon Disk
24	Valve Carrier
26	Vent Protector Assembly
27	Cap Screws (Body to Housing)

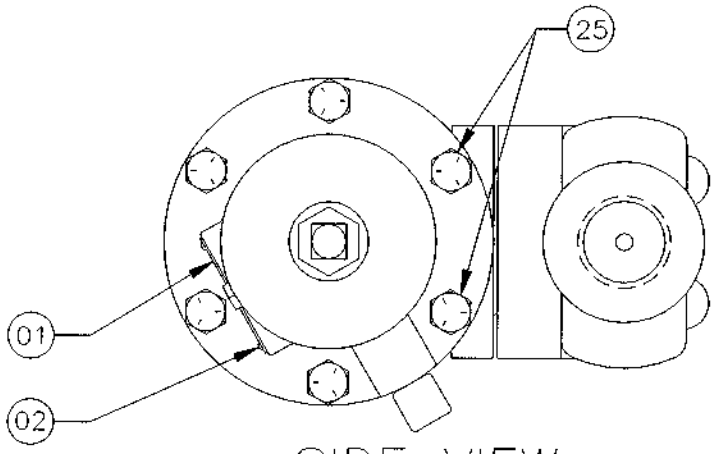
25
01
02

SIDE VIEW

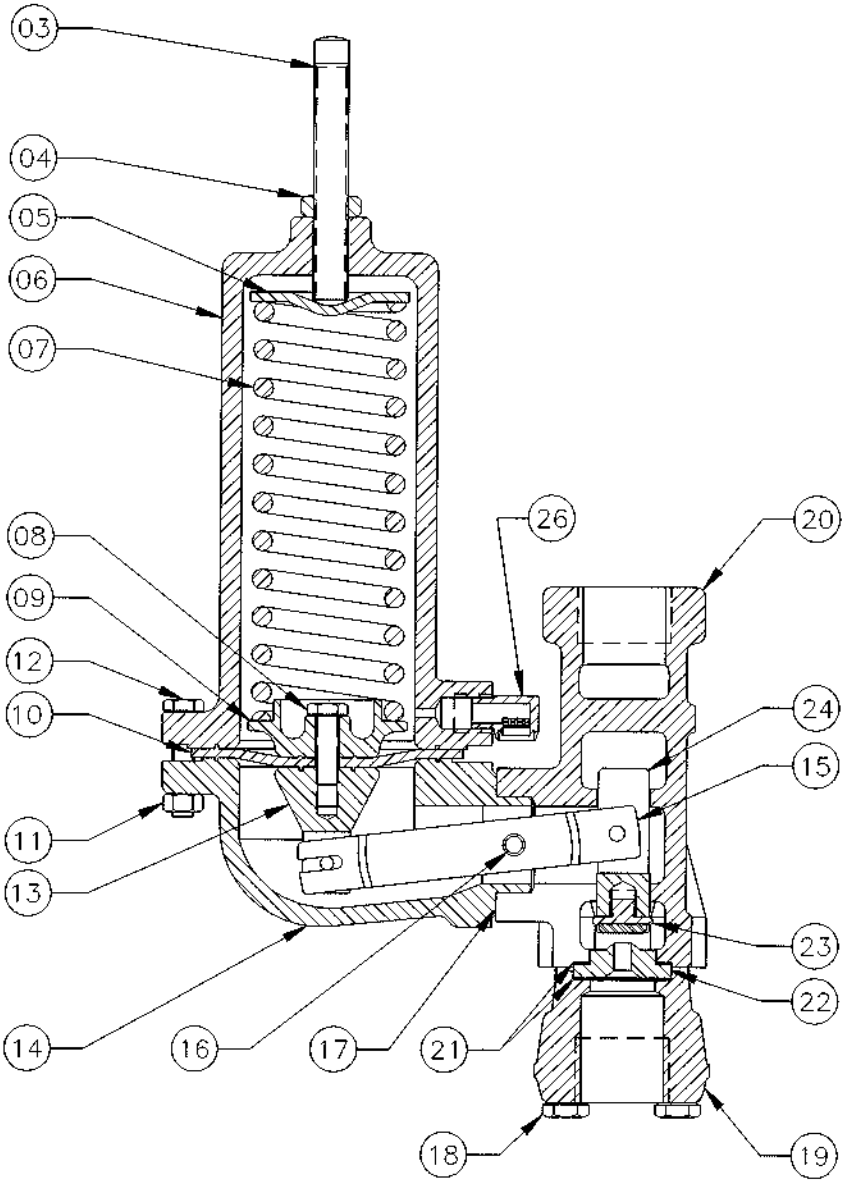
03
04
05
06
07
08
09
12
10
11
13
14
16
17
21
18
19
22
23
24
15
20
26

WARNING: Installation and use of this product must be in compliance with all Engineered Controls International, Inc. instructions as well as requirements and provisions of NFPA #54, NFPA #58, DOT, ANSI, all applicable federal, state, provincial and local standards, codes, regulations and laws.

Inspect regularly. Replace as required. The safe useful life of a regulator is less than 15 years in most applications.

Installation and inspections should be performed only by qualified personnel.

Be sure all instructions are read and understood before installation, operation and maintenance. These instructions must be passed along to the end user of the products.

CAUTION: Contact or inhalation of liquid propane, ammonia and their vapors can cause serious injury or death! NH_3 and LP-Gas must be released outdoors in air currents that will insure dispersion to prevent exposure to people and livestock. LP-Gas must be kept far enough from any open flame or other source of ignition to prevent fire or explosion! LP-Gas is heavier than air and will not disperse or evaporate rapidly if released in still air.

NOTE: All ECII® products are mechanical devices that will eventually become inoperative due to wear, contaminants, corrosion and aging of components made of materials such as metal and rubber. As a general recommendation, regulators should be replaced in 15 years or less.

The environment and conditions of use will determine the safe service life of these products. Periodic inspection and maintenance are essential.

Because ECII® products have a long and proven record of quality and service, LP-Gas dealers may forget the hazards that can occur because a regulator is used beyond its safe service life. The life of a regulator is determined by the environment in which it "lives". The LP-Gas dealer knows better than anyone what this environment is.

There is a developing trend in state legislation and in proposed national legislation to make the owners of products responsible for replacing products before they reach the end of their safe useful life. LP-Gas dealers should be aware of legislation which could affect them.

FOREWORD:

The 1580 Series Regulators are designed to reduce LP-Gas pressure to between 3 and 125 PSIG. They are accurate and dependable over a wide range of operating conditions, and come in a variety of sizes, capacities and designs to suit your needs. Precision built with multi-million BTU capacity, 1580 Series Regulators are perfect for big, tough jobs such as crop drying, asphalt batch mixing, road building (tar wagons), heat treating, high volume space heating and other large industrial and commercial loads. Ideal as a first stage regulator, the large nozzle and straight-through flow provide high capacities and maximum resistance to freeze-ups. The AA1580 series is ideal for use in anhydrous ammonia applications such as blue print machines and heat treating.

Installation:

Clean dirt and foreign material from all piping and fittings. Be sure the regulator inlet and outlet are correctly installed in-line according to the designed flow pattern. The regulator can only be used indoors in accordance with NFPA #58. The regulator must be positioned to protect the vent from the elements of ice, snow drifts, rain, dirt, bugs, paint, or other foreign material. The 1580 Series Regulators are designed for use in both vapor and liquid service, but caution must be exercised with liquid service where the application involves trapping liquid between the regulator and a shut-off valve, either upstream or downstream of the regulator. Any hose or piping that may hold trapped liquid should be protected by installing an ECII® 3127 Series Hydrostatic Relief Valve, or the equivalent.

1580 & AA1580 Series Adjustable High Pressure Regulators

Installation and Adjustment

Adjustment:

The 1580 Series Regulator delivers any pressure within the range of the spring size selected. Please follow the "recommended" ranges shown in the chart. Adjustments are made by loosening the locknut securing the adjusting screw in the bonnet. Turning the adjusting screw down (clockwise) increases the delivery pressure. Turning the adjusting screw up (counterclockwise) decreases the delivery pressure.

Regulator Series	Part Number Suffix	Delivery Pressure Range, PSIG	
		Recommended	Actual
1580	H	45 - 125	0 - 125
	L	25 - 50	0 - 50
	N	3 - 30	0 - 30
AA1580	H	45 - 125	0 - 125
	L	20 - 50	0 - 50
	K, W	3 - 25	0 - 30

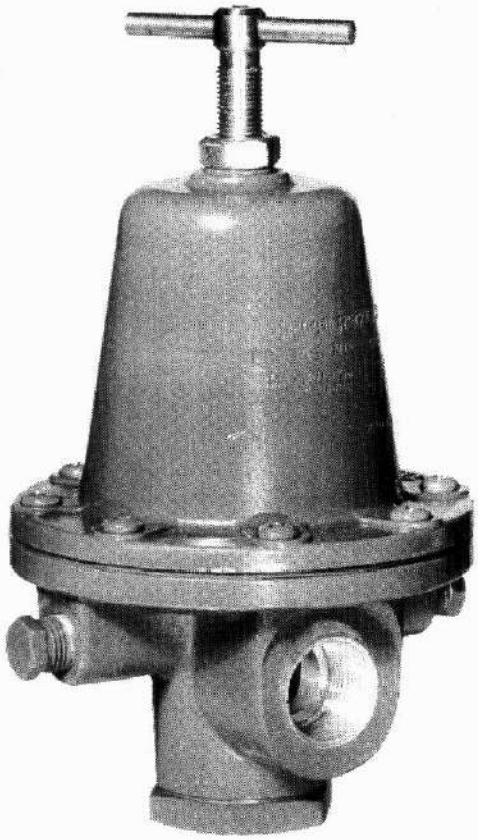

1580 Series

NOTICE

LP-Gas is extremely flammable and explosive. Failure to install parts exactly as described in the instructions could result in a product that will not perform satisfactorily. Even if parts are correctly installed, the product might fail to perform satisfactorily if other parts are worn, corroded or dirty. Improper repair can cause leaks and malfunction, which could result in bodily injury and property damage. **Any such use or installation of parts must ONLY be done by experienced and trained personnel using accepted governmental and industrial safety procedures.**

Most Engineered Controls International, Inc. products are listed with Underwriters Laboratories as manufactured. If repaired, the continued validity of the UL listing is contingent upon proper inspection to determine what needs repairing, proper repair using Engineered Controls International, Inc. parts and procedures, and proper testing for leakage and performance following repairs and installation.

Engineered Controls International, Inc. assumes no responsibility or liability for performance of products repaired in the field. It must be clearly understood that the person or organization repairing the product assumes total responsibility for performance of the product.

LIMITED WARRANTY AND LIMITATION OF LIABILITY

Limited Warranty

Engineered Controls International, Inc. warrants products and repair kits manufactured by it to be free from defects in materials and workmanship under normal use and service for a period of 12 months from the date of installation or operation or 18 months from the date of shipment from the factory, whichever is earlier. If within thirty days after buyer's discovery of what buyer believes is a defect, buyer notifies Engineered Controls International, Inc. thereof in writing, Engineered Controls International, Inc., at its option, and within forty-five days, will repair, replace F.O.B. point of manufacture, or refund the purchase price of that part or product found by it to be defective. Failure of buyer to give such written notice within thirty days shall be deemed an absolute and unconditional waiver of any and all claims of buyer arising out of such defect..

This warranty does not extend to any product or part that is not installed and used in accordance with Engineered Controls International, Inc.'s printed instructions, all applicable state and local regulations, and all applicable national standards, such as those promulgated by NFPA, DOT and ANSI. This warranty does not extend to any product or part that has been damaged by accident, misuse, abuse or neglect, nor does it extend to any product or part which has been modified, altered, or repaired in the field.

Except as expressly set forth above, and subject to the limitation of liability below, Engineered Controls International, Inc. makes NO OTHER WARRANTY, EXPRESS OR IMPLIED, INCLUDING, BUT NOT LIMITED TO THE IMPLIED WARRANTIES OF MERCHANTABILITY AND FITNESS FOR A PARTICULAR PURPOSE, with respect to its products and parts, whether used alone or in combination with others. Engineered Controls International, Inc. disclaims all warranties not stated herein.

Limitation of Liability

Engineered Controls International, Inc.'s total liability for any and all losses and damages arising out of any cause whatsoever shall in no event exceed the purchase price of the products or parts in respect of which such cause arises, whether such cause be based on theories of contract, negligence, strict liability, tort or otherwise.

Engineered Controls International, Inc. shall not be liable for incidental, consequential o. punitive damages or other losses. Engineered Controls International, Inc. shall not be liable for, and buyer assumes liability for, all personal injury and property damage connected with the handling, transportation, possession, further manufacture, other use or resale of products, whether used alone or in combination with any other products or material.

If Engineered Controls International, Inc. furnishes technical advice to buyer, whether or not at buyer's request, with respect to application, further manufacture or other use of the products and parts, Engineered Controls International, Inc. shall not be liable for such technical advice and buyer assumes all risks of such advice and the results thereof.

NOTE: Some states do not allow the exclusion or limitation of incidental or consequential damages, so the above limitation or exclusion may not apply to you. This warranty gives you specific legal rights, and you may have other rights that vary from State to State. The portions of this limited warranty and limitation of liability shall be considered severable and all portions which are not disallowed by applicable law shall remain in full force and effect.

WARNING

All Engineered Controls International, Inc. products are mechanical devices that will eventually become inoperative due to wear, corrosion and aging of components made of materials such as rubber, etc. The environment and conditions of use will determine the safe service life of these products. Periodic inspection and maintenance are essential to avoid serious injury and property damage.

Many Engineered Controls International, Inc. products are manufactured components which are incorporated by others on or in other products or systems used for storage, transport, transfer and otherwise for use of toxic, flammable and dangerous liquids and gases. Such substances must be handled by experienced and trained personnel only, using accepted governmental and industrial safety procedures.

NOTICE TO USERS OF PRODUCTS

The Limited Warranty stated above is a factory warranty to the first purchasers of Engineered Controls International, Inc. products. Since most users have purchased these products from Engineered Controls International, Inc. distributors, the user must within thirty (30) days after the user's discovery of what user believes is a defect, notify in writing the distributor from whom he purchased the product/parts. The distributor may or may not at the distributor's option, choose to submit the product/parts to Engineered Controls International, Inc., pursuant to its Limited Warranty. Failure by buyer to give such written notice within thirty (30) days shall be deemed an absolute and unconditional waiver of buyer's claim for such defects. Acceptance of any alleged defective product/parts by Engineered Controls International, Inc.'s distributor for replacement or repair: under the terms of Engineered Controls International, Inc.'s Limited Warranty in no way obligates Engineered Controls International, Inc. to the terms of the above warranty.

Because of a policy of continuous product improvement, Engineered Controls International, Inc. reserves the right to change designs, materials or specifications without notice.

ECII Engineered Controls International, Inc.

100 RegO Drive PO Box 247 Elon College, NC 27244 USA Phone (919) 449-7707 Fax (919) 449-6594 Telex 253204

Printed in the USA 02-0692-0491
Instruction Sheet 1580-300

GREENHECK

VANE AXIAL FANS

INSTALLATION, OPERATION AND MAINTENANCE MANUAL

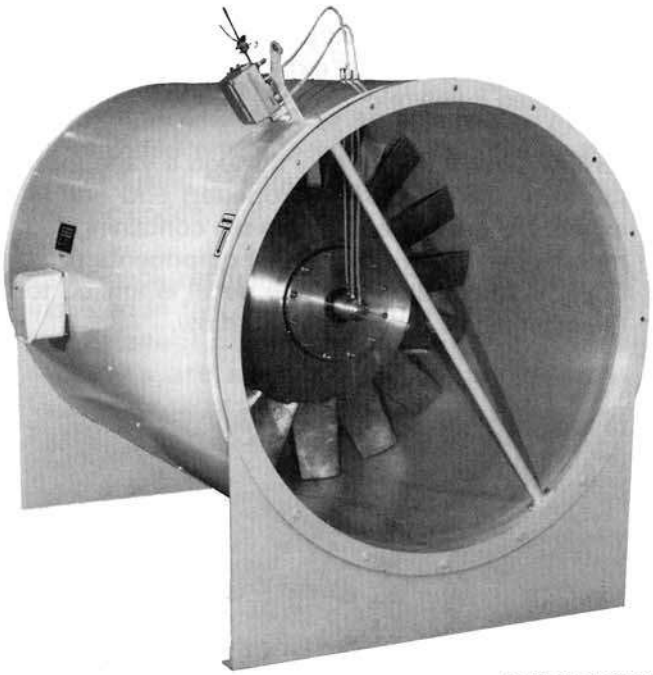

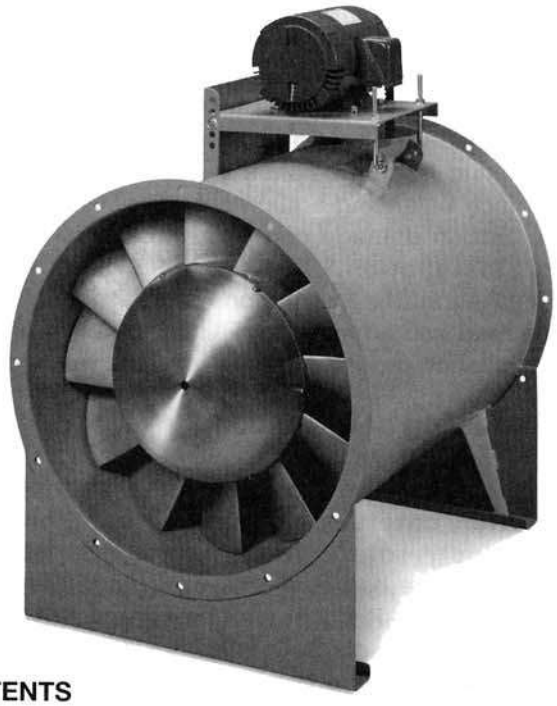

TABLE OF CONTENTS

General Information 2
Electrical Connection 3
Air Pressure Connections To Response Control Fans 3
Controlling Vibration 3
Effects of Installation on performance 4, 5
Unit Start-up 6
Lubrication - Direct Drive 6
Lubrication and V-Belt Drives - Belt Drive 7
How to Adjust Blade Pitch 8
Response Control Rotor - Maintenance and Disassembly 9
Exploded View of Response Control Actuator 10
Response Control Rotor - Inspection and Reassembly 11
Pilot Positioner Calibration Procedures 12
Specifications 13
Motor Trouble Shooting Chart 14
Fan Records and Notes 15

WARNING

1. Disconnect and secure all electrical power to the fan to the "off" position prior to inspection or servicing. Failure to comply with this safety precaution could result in serious injury or death.

2. Moving Components should be properly Guarded to:
   - Prevent injury from damaged or failed components which may be ejected or fall from the unit.
   - Prevent injury from accidental contact with moving parts.
   - Protect fan blades from external interference which may cause damage, unbalance or failure.

   Guards are available from the factory or should be provided by installing personnel.

General Information

Greenheck vane axial fans are thoroughly inspected and tested before leaving the factory. Items such as proper rotor alignment, balance, vibration and workmanship are analyzed by quality control personnel using state-of-the-art equipment. Every unit is test run and must pass a recorded vibration analysis. Any vibration resulting from unbalance is corrected by use of inplace balancing equipment. However, obvious or hidden damage can occur from mishandling or installation. To assure a successful installation, the instructions in this manual must be read and adhered to. Failure to follow proper installation procedures may void the warranty.

Receiving and Handling

Upon receiving the fan from a commercial carrier, carefully examine all components. Manually rotate the rotor to detect any interference between the rotor blades and the fan housing. Record any damage on the Bill of Lading before accepting the fan. File a damage claim with the final carrier if necessary.

Vane axial fans should be lifted by installing a clevis in the top hole of each flange (figure 1) or by the wooden skid if a forklift is used. Never lift the fan by the housing, motor or accessories.

Storage

The fan should be protected from dirt and moisture regardless if it is stored indoors or out. A fabric tarp is suitable for temporary protection. Colored plastic tarps should not be used because they promote condensation.

If the storage period is lengthy (6 months or more) the rotor should be rotated periodically to provide lubrication and corrosion protection for the bearings. Improper storage which results in damage to the fan will void the warranty.

Installation

Service Access - Greenheck recommends all vane axial installations be provided with a means for service access. This access may be in the form of access doors in the duct system, removable duct sections, inlet and outlet cones or optional inspection sections (figure 2) available from your Greenheck representative. Service access is necessary to inspect and repair internal fan components, both at the inlet and outlet ends of the fan. Fans installed without consideration for service access can result in time consuming and expensive removal of connected ductwork.

Airflow Direction - Airflow through a vane axial fan enters at the rotor (propeller) end and is exhausted out the end of the fan containing the motor (direct drive) or drive components (belt drive). Additionally, an arrow decal is affixed to the fan indicating direction of airflow.

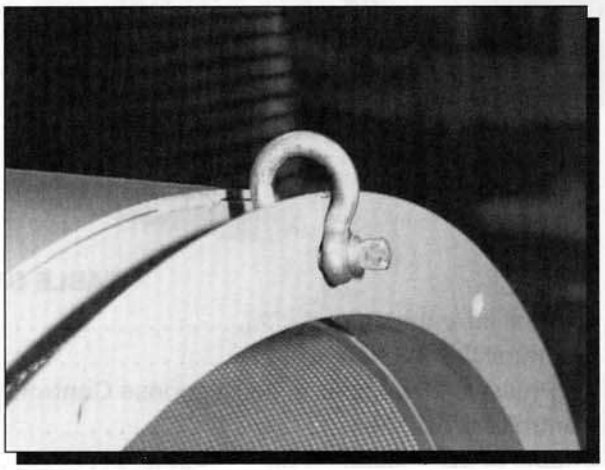

Fig. 1 Photo showing clevis installed for lifting

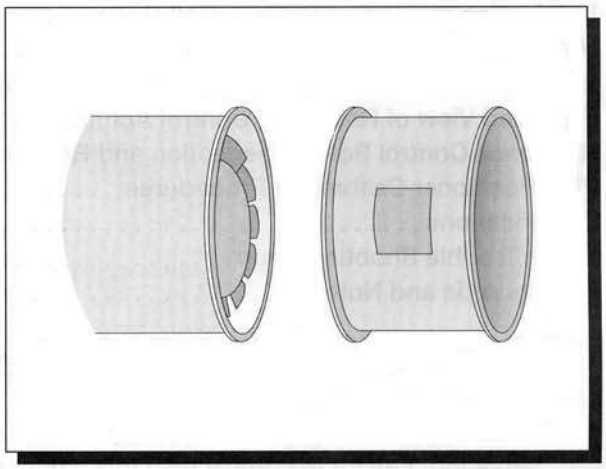

Fig. 2 Inspection section for service access

Unit Start-up

- ❑ ***Disconnect all electrical power to the fan and lock to the "OFF" position.***
- ❑ Check all fasteners on fan, motor base and accessories for tightness.
- ❑ Rotate the rotor (propeller) by hand to assure no parts are rubbing.
- ❑ Check all electrical connections for proper attachment.
- ❑ Check fan housing and ductwork for obstructions and foreign material that may damage the rotor.
- ❑ Check for proper rotor rotation by momentarily energizing (bumping) the fan. Rotation should be counterclockwise when viewing the rotor from the **inlet** end and correspond to the arrow decal affixed to the fan housing.

How to change direction of rotation
1-phase motor rotation can be reversed by following the manufacturer's instructions printed on the motor label or decal located on the inside cover of the wiring terminal box.
3-phase motor rotation can be reversed simply by interchanging any two of the three electrical leads going to the motor.

Lubrication - Direct Drive Fans

All Greenheck vane axial fans are lubricated at the factory and require no additional lubrication upon start-up. However, if the fan has been in storage more than 6 months the motor bearings should purged and refilled with fresh grease. After initial start-up follow the relubrication schedule to preserve the performance and reliability designed into the fan.

Motor Lubrication - Extended copper lubrication lines (pre-filled with grease) are provided from each motor bearing to the exterior of the fan housing.

Recommended Grease Volumes

Motor Frame Size	*Standard Conditions	**Severe Conditions
182 - 215	1.0 cu. in.	.75 cu. in.
254 - 286	2.0 cu. in.	1.5 cu. in.
324 - 365	3.0 cu. in.	2.0 cu. in.
404 - 449	4.0 cu. in.	3.0 cu. in.

*8 Hrs./day, normal loading, clean, max. 40° C temp.
**24 Hrs./day, heavy loading, vibration, dirt/dust, temps. 40 to 50° C.

Greenheck vane axial motors should be lubricated in accordance with the motor manufacturer's recommendations shipped with the fan. In event these instructions are not available, use the schedule printed below.

A hand held grease gun filled with a high quality lithium base grease conforming to NLGI Grade 2 consistency should be used. See recommended grease volumes. Lubricants meeting this requirement are:

-20°C to 50°C (-15° to 120° F)
Chevron Oil - SRI No. 2
Shell Oil - Dolium R
Texaco- Premium RB

-20°C to -75°C (-15°F to -100°F)
Shell Oil - Aeroshell No. 7

Lubrication Frequency Table

Horsepower	*Standard Conditions	**Severe Conditions
1 thru 7-1/2 1800 rpm/under	3 years	1 year
10 thru 75 1800 rpm/under	2 years	6 to 12 months
100 and over 1800 rpm/under	1 year	6 months
Over 1800 rpm	6 months	3 months

Blade Pitch Adjustment - Belt and Direct Drive

Blade Pitch Adjustment Procedure

1. **Disconnect all electrical power to the fan and lock in the "off" position.** See warning on front cover of this manual.

2. Remove the aluminum nose cone on the rotor assembly. Record the location of all balancing weights located under the nosecone bolts.

3. Locate the blade with blade pitch graduations stamped into the blade base and index line on the rotor (Fig. 8). This is the master blade.

4. Loosen the self-locking nut (Fig.9) attaching the master blade until the blade can be rotated by hand.

5. Set the new blade pitch on the master blade by aligning the desired blade pitch number with the index mark. Tighten the self-locking nut slightly to prevent the master blade from moving.

6. At the tip of the master blade, use a thin marker pen to scribe the blade profile on the interior of the fan housing from the leading to the trailing edge of the blade tip (Fig. 10).

7. Loosen the self-locking nuts on the remainder of the blades and set each blade to align with the blade profile scribed on the fan housing. Tighten the self-locking nut slightly to prevent blade from moving.

8. After all blades are adjusted to the proper setting, tighten the self-locking nuts to **125 ft. lbs.** of torque. Replace the nose cone and any balancing weights removed earlier.

IMPORTANT

9. Motor load amperes must be checked and compared to the nameplate rating before returning the fan to service. Increasing blade pitch beyond the capacity of the motor will result in motor burn-out and void the warranty.

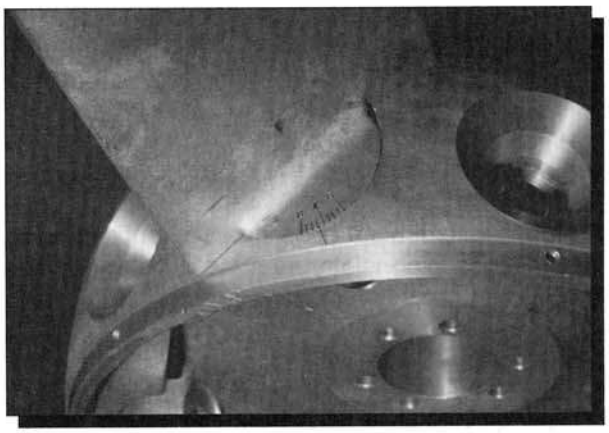

Fig. 8 Blade pitch scale and index line.

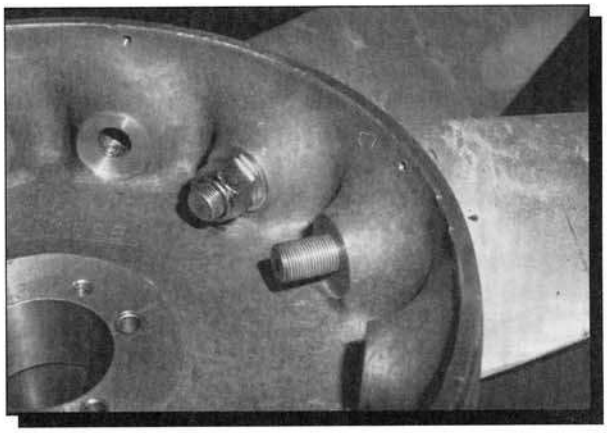

Fig. 9 Self-locking nuts secure blades to hub.

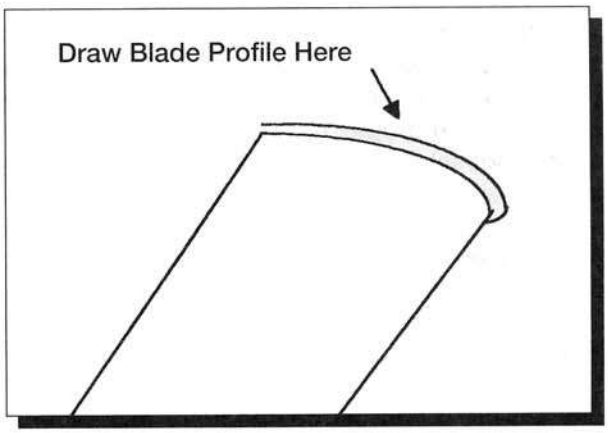

Fig. 10 Blade profile scribed on fan housing.

Vane Axial Specifications

Response Control Pilot Positioner Pressure Operating Range

Minimum psi	50 psi
Maximum psi	80 psi
Steady State Air Consumption	0.85 CFM

Lubricants

Response Control Actuator O-ring Lubricant
Dow Corning Silicon Lube No. 111
(used during 2-year maintenance - see p.9)

Motor Lubrication - Belt and Direct Drive
Chevron Oil Co. - SRI No. 2
Shell Oil Co. - Dolium R
Texaco Oil Co. - Premium RB
(see p. 6 for frequency schedule)

Bearing Lubrication - Belt Drive
(see p. 7 for frequency schedule)

O-Ring Specifications

Response Control Hub Size	Location of O-Ring	O-Ring Size	Quantity Required
17 & 21	Piston	265	2
	Cover Plate	265	1
	Shaft	224	1
	Air Port	108	4
26	Piston	380	2
	Cover Plate	380	1
	Shaft	232	1
	Air Port	108	4

Torque Values

Bolts attaching taper-lock bushing to hub
(Response Control and Adjustable Pitch Fans)

14" and 17" Hubs	25 ft.lbs.
21" Hubs	45 ft.lbs.
26" and 30" Hubs	75 ft.lbs.

Bolts for cam arm clamp
20 ft.lbs.

Blade Nut Torque (Response Control Fans)
Adjusted to provide proper blade twist torque

*Blade Twist Torque
50 in. lbs.

* Torque required to rotate the blade in its socket (to change blade pitch). This torque is determined by torque of the self-locking nut on the blade stud.

Blade Nut Torque (Adjustable Pitch Fans)
125 ft. lbs.

AC Motor Installation – Maintenance Instructions

When this motor is installed according to these instructions, it complies with the EEC Machinery Directive. Electromagnetic Compatibility (EMC) requirements for CE compliance are met when the incoming power is purely sinusoidal. For other power source types, refer to MN1383 "Recommended Practices for Installation for EC Directive 89/336/EEC Relating to EMC".

These instructions are intended to complement, not replace, the information in MN400 Installation and Operation manual for "Integral Horsepower AC induction Motors ODP, TEFC, Explosion Proof".

Handling

The weight of the motor and shipping container will vary. Use correct material handling equipment to avoid injury.

Use caution when removing the motor from its packaging. Sharp corners may exist on motor shaft, motor key, sheet metal and other surfaces.

Receiving

Inspect the motor for damage before accepting it. The Motor shaft should rotate freely with no rubs. Report any damage immediately to the commercial carrier that delivered your motor.

Safety Notice

Only qualified personnel trained in the safe installation and operation of this equipment should install this motor. When improperly installed or used, rotating equipment can cause serious or fatal injury. Equipment must be installed in accordance with the National Electrical Code (NEC), local codes and NEMA MG2 Safety Standards for Construction and Guide for Selection, Installation and Use of Electric Motors and Generators. Observe the following guidelines:

1. When eyebolts are provided, they must be fully tightened and are intended to lift the motor and its included accessories only.
2. Ground the motor according to NEC and local codes.
3. Provide a permanent guard to prevent accidental contact of body parts or clothing with rotating or moving parts or burns if motor is hot.
4. Shaft key must be secured before starting motor.
5. Do not apply power to the motor until the motor is securely mounted by its mounting holes.
6. This motor must only be connected to the proper line voltage, line frequency and load size.
7. Motors are not to be used for load holding or restraining unless a properly sized brake is installed. If a motor mounted brake is installed, provide proper safeguards for personnel in case of brake failure.
8. Disconnect all power services, stop the motor and allow it to cool before servicing.
9. For single phase motors, discharge the start and/or run capacitors before servicing.
10. Do not by-pass or render inoperative any safety device.
11. When using AC motors with frequency inverters, be certain that the Maximum Speed rating (on nameplate) is not exceeded.
12. Mounting bolts should be high tensile steel. Be sure to use a suitable locking device on each bolt (spring washer or thread lock compound).

Guarding

After motor installation is complete, a guard of suitable dimensions must be constructed and installed around the motor/gearmotor. This guard must prevent personnel from coming in contact with any moving parts of the motor or drive assembly but must allow sufficient cooling air to pass over the motor.

If a motor mounted brake is installed, provide proper safeguards for personnel in case of brake failure.

Brush inspection plates and electrical connection cover plates or lids, must be installed before operating the motor.

Motor Enclosure

ODP, Open drip proof motors are intended for use in clean, dry locations with adequate supply of cooling air. These motors should not be used in the presence of flammable or combustible materials. Open motors can emit flame and/or molten metal in the event of insulation failure.

TEFC, totally enclosed motors are intended for use where moisture, dirt and/or corrosive materials are present in indoor and outdoor locations.

Explosion proof motors, as indicated by the Underwriters Laboratories, Inc. label are intended for use in hazardous areas as specified by the NEC.

Mounting

Foot mounted machines should be mounted to a rigid foundation to prevent excessive vibration. Shims may be used if location is uneven.

Flange mounted machines should be properly seated and aligned. Note: If improper rotation direction is detrimental to the load, check rotation direction prior to coupling the load to the motor shaft.

For V-belt drive, mount the sheave pulley close to the motor housing. Allow clearance for end to end movement of the motor shaft. Do not overtighten belts as this may cause premature bearing failure or shaft breakage.

Direct coupled machines should be carefully aligned and the shaft should rotate freely without binding.

Wiring

Connect the motor as shown in the connection diagram. The wiring, fusing and grounding must comply with the National Electrical Code and local codes. When the motor is connected to the load for proper direction of rotation and started, it should start quickly and run smoothly. If not, stop the motor immediately and determine the cause. Possible causes are: low voltage at the motor, motor connections are not correct or the load is too heavy. Check the motor current after a few minutes of operation and compare the measured current with the nameplate rating.

Adjustment

There are no adjustable parts on AC motors.

Noise

For specific sound power or pressure level information, refer to the Acoustic Performance of Standard Baldor TEFC or Super E TEFC motors in the Baldor Mechanical Design Standard MD950. The information is from test results and should be used with the national safety code for noise in the work place.

Vibration

This motor is balanced to NEMA MG1, Part 7 standard.

Lubrication

This is a ball or roller bearing motor. The bearings have been lubricated at the factory. Motors that do not have regrease capability are factory lubricated for the normal life of the bearings.

Lubricant

Baldor motors are pregreased, normally with Polyrex EM (Exxon Mobil). If other greases are preferred, check with a local Baldor Service Center for recommendations.

Relubrication Intervals (For motors with regrease capability)

New motors that have been stored for a year or more should be relubricated. Lubrication is also recommended at these intervals:

Table 1 Relubrication Interval

NEMA (IEC) Frame Size	Rated Speed (RPM)			
	3600	1800	1200	900
Up to 210 incl. (132)	5500Hrs.	12000Hrs.	18000Hrs.	22000Hrs.
Over 210 to 280 incl. (180)	3600Hrs.	9500Hrs.	15000Hrs.	18000Hrs.
Over 280 to 360 incl. (225)	*2200Hrs.	7400Hrs.	12000Hrs.	15000Hrs.
Over 360 to 5000 incl.(300)	*2200Hrs.	3500Hrs.	7400Hrs.	10500Hrs.

* Lubrication interval for 6313 or 6314 bearings that are used in 360 through 5000 frame, 2 pole motors. If roller bearings are used, bearings must be lubricated more frequently, divide the relubrication interval by 2.

Table 2 Service Conditions

Severity of Service	Ambient Temperature Maximum	Atmospheric Contamination	Type of Bearing
Standard	40° C	Clean, Little Corrosion	Deep Groove Ball Bearing
Severe	50° C	Moderate dirt, Corrosion	Ball Thrust, Roller
Extreme	>50° C* or Class H Insulation	Severe dirt, Abrasive dust, Corrosion	All Bearings
Low Temperature	<–30° C **		

* Special high temperature grease is recommended.

** Special low temperature grease is recommended.

Table 3 Lubrication Interval Multiplier

Severity of Service	Multiplier
Standard	1.0
Severe	0.5
Extreme	0.1
Low Temperature	1.0

Table 4 Amount of Grease to Add

Frame Size NEMA (IEC)	Bearing Description (Largest bearing in each frame size)					
	Bearing	OD D mm	Width B mm	Weight of grease to add ounce (gram)	Volume of grease to add	
					inches^3	teaspoon
Up to 210 incl. (132)	6307	80	21	0.30 (8.4)	0.6	2.0
Over 210 to 280 incl. (180)	6311	120	29	0.61 (17.4)	1.2	3.9
Over 280 to 360 incl. (225)	6313	140	33	0.81 (23.1)	1.5	5.2
Over 360 to 5000 incl.(300)	NU322	240	50	2.12 (60.0)	4.1	13.4

Weight in grams = 0.005 DB

Procedure

Clean the grease fitting (or area around grease hole, if equipped with slotted grease screws). If motor has a purge plug, remove it. Motors can be regreased while stopped (at less than 80°C) or running.

Apply grease gun to fitting (or grease hole). Too much grease or injecting grease to quickly can cause premature bearing failure. Slowly apply the recommended amount of grease, taking 1 minute or so to apply. Operate motor for 20 minutes, then reinstall purge plug if previously removed.

Caution: Keep grease clean. Mixing dissimilar grease is not recommended.

Sample Relubrication Determination

This sample determination is based on a NEMA 286T (IEC 180) motor operating at 1750 RPM driving an exhaust fan in an ambient of 43°C atmosphere that is moderately corrosive.

1. Table 1 list 9500 hours for standard conditions.
2. Table 2 classifies severity of service as “Severe”.
3. Table 3 lists a multiplier value of 0.5 for Severe conditions.
4. Table 4 shows that 1.2 in^3 or 3.9 teaspoon of grease is to be added.

Note: Smaller bearings in size category may require reduced amounts of grease.

BALDOR MOTORS AND DRIVES
P.O. Box 2400
Fort Smith, AR 72902–2400 U.S.A.
(501) 646–4711

DC Motor Installation – Maintenance Instructions

When this motor is installed according to these instructions, it complies with the EEC Machinery Directive. Electromagnetic Compatibility (EMC) requirements for CE compliance are met when the incoming power is purely sinusoidal. For other power source types, refer to MN1383 "Recommended Practices for Installation for EC Directive 89/336/EEC Relating to EMC".

These instructions are intended to complement, not replace, the information in MN605 Installation and Operation manual for "Integral Horsepower DC Motor".

Handling

The weight of the motor and shipping container will vary. Use correct material handling equipment to avoid injury.

Use caution when removing the motor from its packaging. Sharp corners may exist on motor shaft, motor key, sheet metal and other surfaces.

Receiving

Inspect the motor for damage before accepting it. The Motor shaft should rotate freely with no rubs. Report any damage immediately to the commercial carrier that delivered your motor.

Safety Notice

Only qualified personnel trained in the safe installation and operation of this equipment should install this motor. When improperly installed or used, rotating equipment can cause serious or fatal injury. Equipment must be installed in accordance with the National Electrical Code (NEC), local codes and NEMA MG2 Safety Standards for Construction and Guide for Selection, Installation and Use of Electric Motors and Generators. Observe the following guidelines:

1. When eyebolts are provided, they must be fully tightened and are intended to lift the motor and its included accessories only.
2. Ground the motor according to NEC and local codes.
3. Provide a permanent guard to prevent accidental contact of body parts or clothing with rotating or moving parts or burns if motor is hot.
4. Shaft key must be secured before starting motor.
5. Do not apply power to the motor until the motor is securely mounted by its mounting holes.
6. This motor must only be connected to the proper line voltage, line frequency and load size.
7. Motors are not to be used for load holding or restraining unless a properly sized brake is installed. If a motor mounted brake is installed, provide proper safeguards for personnel in case of brake failure.
8. Disconnect all power services, stop the motor and allow it to cool before servicing.
9. For single phase motors, discharge the start and/or run capacitors before servicing.
10. Do not by-pass or render inoperative any safety device.
11. DC series wound motors must be protected from sudden loss of load causing overspeed damage. DC shunt wound motors must be protected from loss of field voltage which can result in damage.
12. Mounting bolts should be high tensile steel. Be sure to use a suitable locking device on each bolt (spring washer or thread lock compound).

Guarding

After motor installation is complete, a guard of suitable dimensions must be constructed and installed around the motor/gearmotor. This guard must prevent personnel from coming in contact with any moving parts of the motor or drive assembly but must allow sufficient cooling air to pass over the motor.

If a motor mounted brake is installed, provide proper safeguards for personnel in case of brake failure.

Brush inspection plates and electrical connection cover plates or lids, must be installed before operating the motor.

Motor Enclosure

ODP, Open drip proof motors are intended for use in clean, dry locations with adequate supply of cooling air. These motors should not be used in the presence of flammable or combustible materials. Open motors can emit flame and/or molten metal in the event of insulation failure.

TEFC, totally enclosed motors are intended for use where moisture, dirt and/or corrosive materials are present in indoor and outdoor locations.

Explosion proof motors, as indicated by the Underwriters Laboratories, Inc. label are intended for use in hazardous areas as specified by the NEC.

Mounting

Foot mounted machines should be mounted to a rigid foundation to prevent excessive vibration. Shims may be used if location is uneven.

Flange mounted machines should be properly seated and aligned. Note: If improper rotation direction is detrimental to the load, check rotation direction prior to coupling the load to the motor shaft.

For V-belt drive, mount the sheave pulley close to the motor housing. Allow clearance for end to end movement of the motor shaft. Do not overtighten belts as this may cause premature bearing failure or shaft breakage.

Direct coupled machines should be carefully aligned and the shaft should rotate freely without binding.

Wiring

Connect the motor as shown in the connection diagram. If this motor is installed as part of a motor control drive system, connect and protect the motor according to the control manufacturers diagrams. The wiring, fusing and grounding must comply with the National Electrical Code and local codes. When the motor is connected to the load for proper direction of rotation and started, it should start quickly and run smoothly. If not, stop the motor immediately and determine the cause. Possible causes are: low voltage at the motor, motor connections are not correct or the load is too heavy. Check the motor current after a few minutes of operation and compare the measured current with the nameplate rating.

Adjustment

The neutral is adjustable on some motors.

Noise

For specific sound power or pressure level information, refer to the Acoustic Performance of Standard Baldor TEFC or Super E TEFC motors in the Baldor Mechanical Design Standard MD950. The information is from test results and should be used with the national safety code for noise in the work place.

Vibration

This motor is balanced to NEMA MG1, Part 7 standard.

Lubrication

This is a ball or roller bearing motor. The bearings have been lubricated at the factory. Motors that do not have regrease capability are factory lubricated for the normal life of the bearings.

Lubricant

Baldor motors are pregreased, normally with Polyrex EM (Exxon Mobil). If other greases are preferred, check with a local Baldor Service Center for recommendations.

Relubrication Intervals (For motors with regrease capability)

New motors that have been stored for a year or more should be relubricated. Lubrication is also recommended at these intervals:

Table 1 Relubrication Interval

NEMA (IEC) Frame Size	Rated Speed (RPM)			
	3600	1800	1200	900
Up to 210 incl. (132)	5500Hrs.	12000Hrs.	18000Hrs.	22000Hrs.
Over 210 to 280 incl. (180)	3600Hrs.	9500Hrs.	15000Hrs.	18000Hrs.
Over 280 to 360 incl. (225)	*2200Hrs.	7400Hrs.	12000Hrs.	15000Hrs.
Over 360 to 5000 incl.(300)	*2200Hrs.	3500Hrs.	7400Hrs.	10500Hrs.

* Lubrication interval for 6313 or 6314 bearings that are used in 360 through 5000 frame, 2 pole motors. If roller bearings are used, bearings must be lubricated more frequently, divide the relubrication interval by 2.

Table 2 Service Conditions

Severity of Service	Ambient Temperature Maximum	Atmospheric Contamination	Type of Bearing
Standard	40° C	Clean, Little Corrosion	Deep Groove Ball Bearing
Severe	50° C	Moderate dirt, Corrosion	Ball Thrust, Roller
Extreme	>50° C* or Class H Insulation	Severe dirt, Abrasive dust, Corrosion	All Bearings
Low Temperature	<–30° C **		

* Special high temperature grease is recommended.

** Special low temperature grease is recommended.

Table 3 Lubrication Interval Multiplier

Severity of Service	Multiplier
Standard	1.0
Severe	0.5
Extreme	0.1
Low Temperature	1.0

Table 4 Amount of Grease to Add

Frame Size NEMA (IEC)	Bearing Description (Largest bearing in each frame size)					
	Bearing	OD D mm	Width B mm	Weight of grease to add ounce (gram)	Volume of grease to add	
					inches^3	teaspoon
Up to 210 incl. (132)	6307	80	21	0.30 (8.4)	0.6	2.0
Over 210 to 280 incl. (180)	6311	120	29	0.61 (17.4)	1.2	3.9
Over 280 to 360 incl. (225)	6313	140	33	0.81 (23.1)	1.5	5.2
Over 360 to 5000 incl.(300)	NU322	240	50	2.12 (60.0)	4.1	13.4

Weight in grams = 0.005 DB

Procedure

Clean the grease fitting (or area around grease hole, if equipped with slotted grease screws). If motor has a purge plug, remove it. Motors can be regreased while stopped (at less than 80°C) or running.

Apply grease gun to fitting (or grease hole). Too much grease or injecting grease to quickly can cause premature bearing failure. Slowly apply the recommended amount of grease, taking 1 minute or so to apply. Operate motor for 20 minutes, then reinstall purge plug if previously removed.

Caution: Keep grease clean. Mixing dissimilar grease is not recommended.

Sample Relubrication Determination

This sample determination is based on a NEMA 286T (IEC 180) motor operating at 1750 RPM driving an exhaust fan in an ambient of 43°C atmosphere that is moderately corrosive.

1. Table 1 list 9500 hours for standard conditions.
2. Table 2 classifies severity of service as “Severe”.
3. Table 3 lists a multiplier value of 0.5 for Severe conditions.
4. Table 4 shows that 1.2 in^3 or 3.9 teaspoon of grease is to be added.

Note: Smaller bearings in size category may require reduced amounts of grease.

Brushes

Periodically, the brushes should be inspected and all brush dust blown out of the motor. If a brush is worn $^1/_2$″ (from length specified in renewal parts data), replace the brushes. If the commutator is worn or rough, the armature should be removed. The commutator should be turned in a lathe, the mica recut and the commutator polished. Reassemble and seat the new brushes using a brush seating stone. Be sure the rocker arm is set on the neutral mark.

BALDOR MOTORS AND DRIVES
P.O. Box 2400
Fort Smith, AR 72902–2400 U.S.A.
(479) 646–4711

LEESON® OHIO GEAR

ELECTRIC MOTORS, GEARMOTORS AND DRIVES

Worm Gear Reducers Installation, Lubrication and Maintenance Instructions

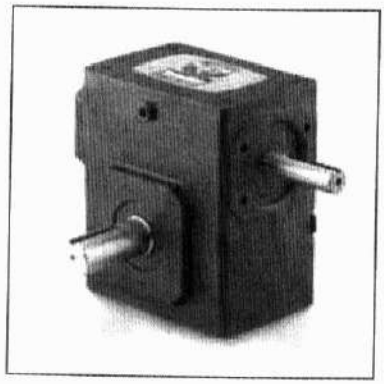

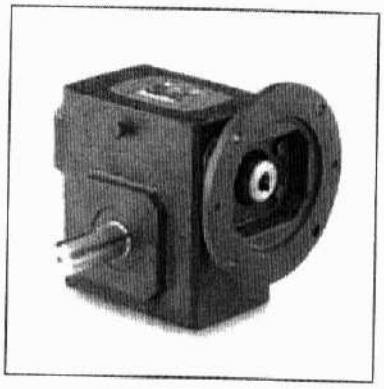

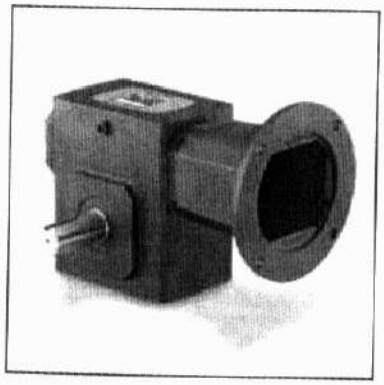

Table of Contents

WARNING/CAUTION INFORMATION 2

General Operation 3

Installation 3
- "C" Flange Adapter Kits 7

Lubrication
- Standard Units 3
- Oil Capacities 4
- Mounting Positions 5

Maintenance 5-6

Parts List 8-11

Selection Information

Read ALL instructions prior to operating reducer. Injury to personnel or reducer failure may be caused by improper installation, maintenance or operation.

Safety Alert

WARNING

- Written authorization from LEESON ELECTRIC is required to operate or use reducers in man lift or people moving devices.
- Check to make certain application does not exceed the allowable load capacities published in the current catalog.
- Buyer shall be solely responsible for determining the adequacy of the product for any and all uses to which Buyer shall apply the product. The application by Buyer shall not be subject to any implied warranty of fitness for a particular purpose.
- For safety, Buyer or User should provide protective guards over all shaft extensions and any moving apparatus mounted thereon. The User is responsible for checking all applicable safety codes in his area and providing suitable guards. Failure to do so may result in bodily injury and/or damage to equipment.
- Hot oil and reducers can cause severe burns. Use extreme care when removing lubrication plugs and vents.
- Make certain that the power supply is disconnected before attempting to service or remove any components. Lock out the power supply and tag it to prevent unexpected application of power.
- Reducers are not to be considered fail safe or self-locking devices. If these features are required, a properly sized, independent holding device should be utilized. Reducers should not be used as a brake.
- Any brakes that are used in conjunction with a reducer must be sized or positioned in such a way so as to not subject the reducer to loads beyond the catalog rating.
- Lifting supports including eyebolts are to be used for vertically lifting the gearbox only and no other associated attachments or motors.
- Use of an oil with an EP additive on units with backstops may prevent proper operation of the backstop. Injury to personnel, damage to the reducer or other equipment may result.
- Overhung loads subject shaft bearings and shafts to stress which may cause premature bearing failure and/or shaft breakage from bending fatigue, if not sized properly.

CAUTION

- Test run unit to verify operation. If the unit tested is a prototype, that unit must be of current production.
- If the speed reducer cannot be located in a clear and dry area with access to adequate cooling air supply, then precautions must be taken to avoid the ingestion of contaminants such as water and the reduction in cooling ability due to exterior contaminants.
- Mounting bolts should be routinely checked to ensure that the unit is firmly anchored for proper operation.

Important Information

In the event of the resale of any of the goods, in whatever form, Resellers/Buyers will include the following language in a conspicuous place and in a conspicuous manner in a written agreement covering such sale:

> *The manufacturer makes no warranties or representations, express or implied, by operation of law or otherwise, as to the merchantability or fitness for a particular purpose of the goods sold hereunder. Buyer acknowledges that it alone has determined that the goods purchased hereunder will suitably meet the requirements of their intended use. In no event will the manufacturer be liable for consequential, incidental or other damages. Even if the repair or replacement remedy shall be deemed to have failed of its essential purpose under Section 2-719 of the Uniform Commercial Code, the manufacturer shall have no liability to Buyer for consequential damages.*

Resellers/Buyers agree to also include this entire document including the warnings above in a conspicuous place and in a conspicuous manner in writing to instruct users on the safe usage of the product.

This instructions manual should be read together with all other printed information such as catalogs, supplied by LEESON ELECTRIC.

General Operation

1. Run the motor which drives the reducer and check the direction of reducer output rotation. Consult motor nameplate for instructions to reverse the direction of rotation.
2. Attaching the load: On direct coupled installations, check shaft and coupling alignment between speed reducer and loading mechanism. On chain/sprocket and belt/pulley installation, locate the sprocket or pulley as close to the oil seal as possible to minimize overhung load. Check to verify that the overhung load does not exceed specifications published in the catalog.
3. High momentum loads: If coasting to a stop is undesirable, a braking mechanism should be provided to the speed reducer output shaft or the driven mechanism.

CAUTION The system of connected rotating parts must be free from critical speed, torsional or other type vibration, no matter how induced. The responsibility for this system analysis lies with the purchaser of the speed reducer.

Installation

1. Mount the unit to a rigid flat surface using grade 5 or higher fasteners. The mounting fasteners should be the largest standard size that will fit in the base mounting hole. Shim as required under flange or base feet which do not lie flat against the mounting surface.
2. For shipment, pipe plugs are installed in the unit and a vent plug is packed separately. After mounting the unit in position, remove the appropriate pipe plug and install the vent plug in the location shown on page 5. On double reduction units both the primary and the secondary must be vented. Failure to vent the unit can cause premature seal wear or loss of seal and oil. These conditions are not covered by warranty. Check for correct oil level. Contact the factory for level and vent recommendations on non-standard mounting positions. **WASHGUARD® (BISSC)** and **ALL-STAINLESS STEEL** reducers are factory supplied with an Enviro-Seal and do not use vents. See (Enviro-Seal) under **Lubrication** for further information.
3. **WASHGUARD® (BISSC)** and **ALL-STAINLESS STEEL** reducers include synthetic oil and an Enviro-Seal pre-installed at the factory. It is not necessary to vent these units, and they can be used as supplied from the factory. Do not loosen the nut holding the stem of the Enviro-Seal, and do not block the hole in the stem. Do not blow pressurized air into the hole, and avoid spraying washdown chemicals directly into the hole.
4. Connect motor to speed reducer.

WARNING Depending upon gear geometry and operating conditions worm gear reducers may or may not backdrive. Special consideration should be given to high inertia loads connected to the output shaft. Consult the factory for further details.

CAUTION DO NOT CHANGE MOUNTING POSITIONS WITHOUT CONTACTING FACTORY.
Altering the mounting position may require special lubrication provisions which must be factory installed.

CAUTION Do not operate the reducer without making sure it contains the correct amount of oil. Do not overfill or underfill with oil, or injury to personnel, reducer or other equipment may result. **WASHGUARD®** and **ALL-STAINLESS STEEL** reducers are lubed and sealed for life, so in most applications it will not be necessary to drain or re-fill the unit.

CAUTION A unit cannot be used as an integral part of a machine superstructure which would impose additional loads on the unit other than those imposed by the torque being transmitted either through a shaft-mounted arrangement, and any shaft mounted power transmitting device. *(e.g., sprockets, pulleys, couplings)*

CAUTION For safe operation and to maintain the unit warranty, when changing a factory installed fastener for any reason, it becomes the responsibility of the person making the change to properly account for fastener grade, thread engagement, load, tightening torque and the means of torque retention.

Lubrication - Standard Units

With the exception of reducer sizes 870, 880 and 8100 (shipped dry), all standard worm reducers ordered from the factory are filled with synthetic lubricant to operate within a -10° to105° F ambient temperature range. Double reduction units have separate oil sumps and must be filled/checked independently. Prior to startup, verify that the oil is at the level shown on the drawings on page 5. If the ambient temperature will be outside of this range, drain and refill reducer with lubricant of proper viscosity prior to use.

Enviro-Seal: WASHGUARD® (BISSC) and **ALL-STAINLESS STEEL** reducers come standard with an Enviro-Seal and synthetic oil pre-installed at the factory. It is not necessary to vent these reducers, and they can be used as supplied from the factory.

CAUTION In the Food and Drug Industry (including animal food), consult the lubrication supplier for recommendation of lubricants which are acceptable to the Food and Drug Administration and/or other authoritative bodies having jurisdiction.

CAUTION Do not mix different oils in the reducer. Oils should be compatible with Viton® seal material.

Lubrication

The reducer is properly filled at the factory with sufficient lubricant per customer specified mounting position. If position is not specified by customer, reducer will be filled to level in mounting position 1 (worm over) Reducer ordered with a "MOD" will be filled based on the factory assumed mounting position, mounting position should be specified with order to assure proper lubrication.

Factory Assumed Mounting Orientation	Applicable Unit Styles*	
Worm Over	B, T, F, H, FH, C D, DT, DF, DH, DFH DX, DXT, DXH, DXFH	Single Reduction Double Reduction Worm-Worm Double Reduction Helical-Worm
Worm Under	U DU	Single Reduction Double Reduction Worm-Worm
Vertical Output	VL, VH DVL, DVH DXVL, DXVH	Single Reduction Double Reduction Worm-Worm Double Reduction Helical-Worm
Vertical Input	J DJ DXJ	Single Reduction Double Reduction Worm-Worm Double Reduction Helical-Worm

* INCLUDES MOTORIZED COUPLING AND QUILL INPUT VERSIONS OF ALL STYLES LISTED

All standard IRONMAN® BY OHIO GEAR Worm Reducers are factory filled with MOBIL SHC-634 lubricant, a synthesized hydrocarbon formulated for long life and wide operating temperature range (-25°F to +220°F).
Change intervals: Standard compounded lubricants (non-synthetic) should be changed every six months or 2500 operating hours, whichever comes first. Factory installed synthetic lubricants should be changed only when performing maintenance that requires gearbox disassembly.

If oil must be replaced in IRONMAN® BY OHIO GEAR Worm Reducers, use only MOBIL SHC-634.

Do not confuse MOBIL SHC-634 with MOBILGEAR 634. MOBILGEAR 634 is an EP type gear oil NOT suitable for use in the IRONMAN® BY OHIO GEAR worm gear reducers.

SPECIAL LUBRICATION REQUIREMENTS - Size 830 & Larger
Please specify mounting position *with order* if any of the following applies:
1- Reducer is mounted with input or output shafts vertical
2- Input speed is less than 900 RPM
3- Reducer is mounted in inclined position
NOTE: The reducer may require modifications to assure proper lubrication in these applications.

For lubrication requirements of helical reducers (primaries of helical/worm reducers and ratio multipliers), refer to ratio multiplier maintenance manual or contact LEESON Electric.

Oil Capacities (ounces) - Standard Units

Mounting Position	UNIT SIZE													
	813	815	818	821	824	826	830	832	842	852	860	870*	880*	8100*
1-Worm Over	4	12	12	20	24	40	56	72	112	188	312	560	768	1152
2-Worm Under	8	16	20	28	40	60	84	108	152	304	328	524	820	1280
3-Vertical Output	4	16	16	28	32	48	68	88	128	248	320	332	460	640
4-Vertical Input	4	16	16	24	32	48	72	92	128	248	325	584	800	1200
5-Worm Over on Secondary Unit of Double Reduction	—	—	—	N/A	N/A	N/A	N/A	192	308	320	485	805	1144	1716

* Shipped dry

16 OZ.	=	1 PINT
2 PINTS	=	1 QUART
4 QUARTS	=	1 GALLON
1 GALLON	=	128 OZ.

CAUTION Always check for proper oil level after filling. Capacities vary somewhat with model and mounting position. Oil should rise to bottom edge of level hole. Do not overfill.

Standard Speed Reducer Mounting Positions & Vent Plug, Level and Drain Locations

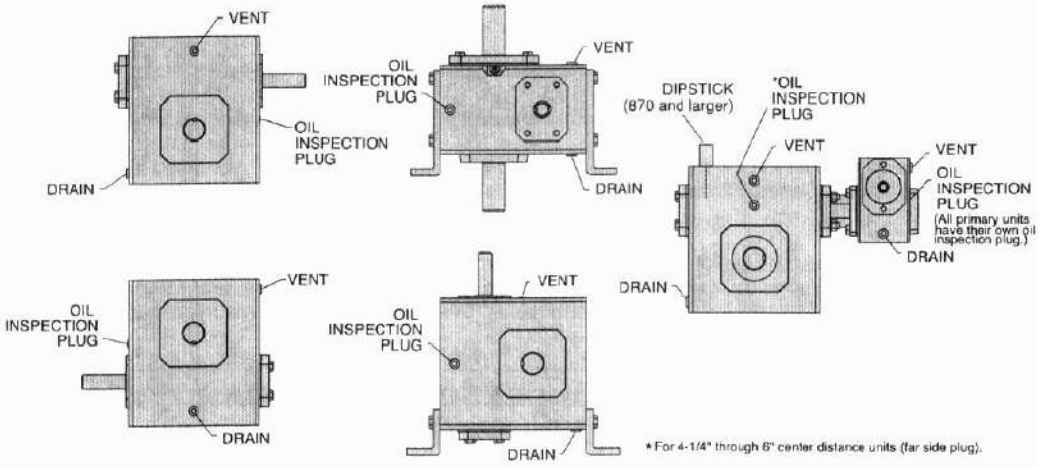

Maintenance · Standard Units

Your IRONMAN® BY OHIO GEAR reducer has been tested and adjusted at the factory. Dismantling or replacement of components must be done by LEESON to maintain the warranty.

Inspect vent plug or stem of the Environ-Seal (if equipped) often to insure it is clean and operating.

⚠CAUTION Mounting bolts should be routinely checked to ensure that the unit is firmly anchored for proper operation.

Seals: The IRONMAN® BY OHIO GEAR line of speed reducers utilize premium quality seals which are the state-of-the-art in sealing technology. Seals are, however, a wear item and eventually need to be replaced. Replacement can be easily accomplished by following the steps below:

1. Remove the worn seal without damaging the shaft surface or the seal bore. This can be done by drilling a .062" diameter hole in the seal casing (being careful not to drill into the bearing behind the seal). Screw a #10 sheet metal screw into the hole and pry out the seal.
2. Clean the seal bore of sealant.
3. Before installing the new seal, use electrical tape to cover any keyways on the shaft to prevent seal lip damage.
4. Grease the seal lips with bearing grease and apply a sealant to the seal bore.
5. Slide the seal over the shaft being careful not to fold the inner lip over on any shaft steps.
6. Press the seal into its bore with a sleeve that presses on the seal casing, being careful to keep the seal square in its bore.

If seal leakage has resulted in the loss of a significant amount of oil, it may be necessary to add more lubricant. For normal ambient temperature conditions, LEESON recommends Mobil SHC 634 synthetic gear oil for worm drives, and MOBILGEAR 629 (non-synthetic) oil for helical drives.

⚠CAUTION Always check for proper oil level after filling. Do not overfill or underfill with oil, or injury to personnel, reducer, or other equipment may result.

⚠CAUTION Do not mix different oils in the reducer. Oils should be compatible with Viton® seal material.

Parts List

LEESON
OHIO GEAR

MODEL B813-B860
(Basic Unit Components)
SINGLE REDUCTION

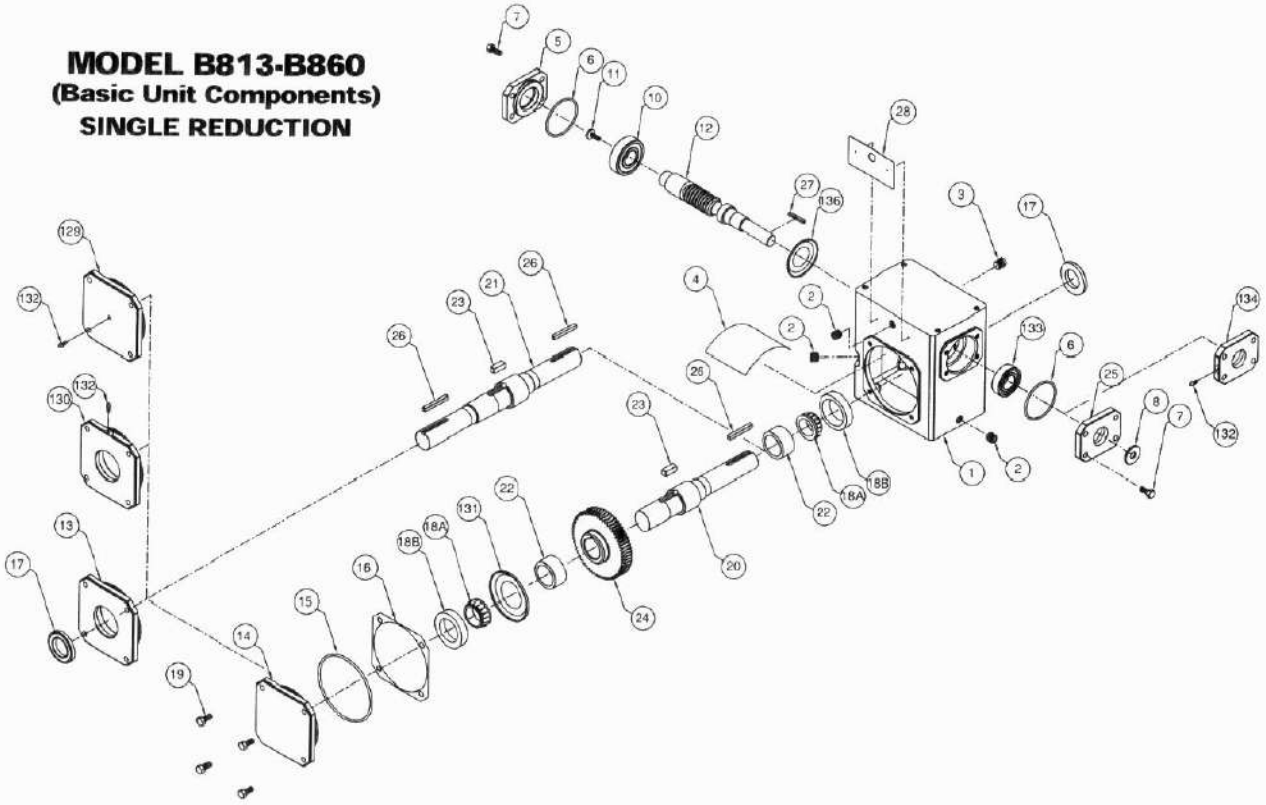

BASIC SINGLE REDUCTION UNIT (B-STYLE)

ITEM # DESCRIPTION

1 HOUSING
2 PIPE PLUG
3 VENT PLUG
4 SPLASH GUARD
5 INPUT CAP
6 O-RING
7 HEX HEAD CAP SCREW
8 INPUT OIL SEAL
9 INPUT BEARING (cup and cone for 842 and larger units)
10 INPUT BEARING (cup and cone for 842 and larger units)
■11 RETAINING SCREW
12 INPUT WORM SHAFT
13 OUTPUT COVER - OPEN
14 OUTPUT COVER - CLOSED
15 O-RING
16 OUTPUT COVER SHIM (as required)
17 OUTPUT OIL SEAL
18 OUTPUT BEARING (18A. CONE, 18B. CUP)
19 HEX HEAD CAP SCREW
♣20 OUTPUT SHAFT - SINGLE
♣21 OUTPUT SHAFT - DOUBLE
22 GEAR SPACER
23 GEAR KEY (only used on size 826 and larger units)
♣24 OUTPUT GEAR
*25 INPUT COVER
26 KEY - OUTPUT EXTENSION
27 KEY - INPUT EXTENSION
28 NAMEPLATE

QUILL MOTOR FLANGE UNIT (BMQ-STYLE)

40 QUILL MOTOR FLANGE
41 INPUT OIL SEAL
42 HEX HEAD CAP SCREW (flange to housing)
43 RETAINING RING - SHAFT
*44 RETAINING RING - HOUSING
45 QUILL INPUT SHAFT
46 KEY - INPUT
47 HEX HEAD CAP SCREW (motor to flange)

HOLLOW OUTPUT SHAFT UNIT (H-STYLE)

51 OUTPUT COVER
52 OUTPUT OIL SEAL
53 OUTPUT BEARING (53A. CONE, 53B. CUP)
54 GEAR SPACER
♣55 OUTPUT SHAFT
56 SETSCREW
57 GEAR KEY (only used on size 826 and larger units)
♣58 OUTPUT GEAR
59 OUTPUT KEY

LONG MOTOR FLANGE AND COUPLING KIT (BM-STYLE)

110 "C" FACE MOTOR FLANGE
111 HEX HEAD CAP SCREW (flange to housing)
112 COUPLING KEY - REDUCER SHAFT
113 SETSCREW - REDUCER SHAFT
114 COUPLING GEAR - REDUCER SHAFT
115 COUPLING SLEEVE
116 SETSCREW - MOTOR SHAFT
117 COUPLING GEAR - MOTOR SHAFT
118 COUPLING KEY - MOTOR SHAFT
119 HEX HEAD CAP SCREW
(motor to flange)
120 PLASTIC PLUG

VERTICAL SHAFT REQUIRED PARTS
(supplied only when mounting position involves a vertical shaft)

*129 OUTPUT COVER - CLOSED
*130 OUTPUT COVER - OPEN
*131 OUTPUT BEARING GREASE RETAINER
132 GREASE FITTING
133 SEALED BALL BEARING (only used on size 818 thru 826 units)
♦134 INPUT COVER
♦136 INPUT BEARING GREASE RETAINER

* ONLY USED ON SIZE 842 AND LARGER UNITS
♦ ONLY USED ON SIZE 830 AND LARGER UNITS
♣ SUPPLIED ONLY AS OUTPUT ASSEMBLY ON 813 THROUGH 824 UNITS
■ ONLY USED ON SIZES 813 - 832

Parts List

LEESON
OHIO GEAR

MODEL B813-B860
(Basic Unit Components)
SINGLE REDUCTION

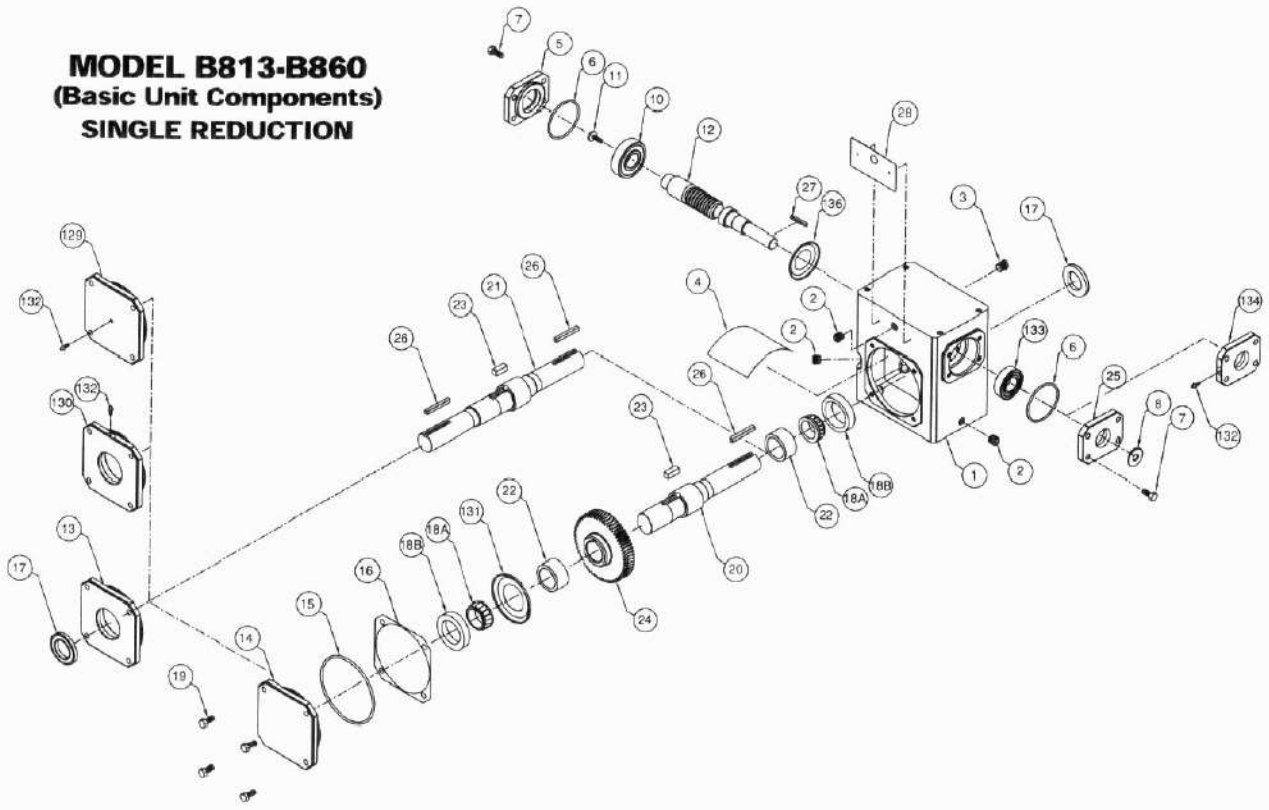

BASIC SINGLE REDUCTION UNIT (B-STYLE)

ITEM # DESCRIPTION

1 HOUSING
2 PIPE PLUG
3 VENT PLUG
4 SPLASH GUARD
5 INPUT CAP
6 O-RING
7 HEX HEAD CAP SCREW
8 INPUT OIL SEAL
9 INPUT BEARING (cup and cone for 842 and larger units)
10 INPUT BEARING (cup and cone for 842 and larger units)
■11 RETAINING SCREW
12 INPUT WORM SHAFT
13 OUTPUT COVER - OPEN
14 OUTPUT COVER - CLOSED
15 O-RING
16 OUTPUT COVER SHIM (as required)
17 OUTPUT OIL SEAL
18 OUTPUT BEARING (18A. CONE, 18B. CUP)
19 HEX HEAD CAP SCREW
♣20 OUTPUT SHAFT - SINGLE
♣21 OUTPUT SHAFT - DOUBLE
22 GEAR SPACER
23 GEAR KEY (only used on size 826 and larger units)
♣24 OUTPUT GEAR
*25 INPUT COVER
26 KEY - OUTPUT EXTENSION
27 KEY - INPUT EXTENSION
28 NAMEPLATE

QUILL MOTOR FLANGE UNIT (BMQ-STYLE)

40 QUILL MOTOR FLANGE
41 INPUT OIL SEAL
42 HEX HEAD CAP SCREW (flange to housing)
43 RETAINING RING - SHAFT
*44 RETAINING RING - HOUSING
45 QUILL INPUT SHAFT
46 KEY - INPUT
47 HEX HEAD CAP SCREW (motor to flange)

HOLLOW OUTPUT SHAFT UNIT (H-STYLE)

51 OUTPUT COVER
52 OUTPUT OIL SEAL
53 OUTPUT BEARING (53A. CONE, 53B. CUP)
54 GEAR SPACER
♣55 OUTPUT SHAFT
56 SETSCREW
57 GEAR KEY (only used on size 826 and larger units)
♣58 OUTPUT GEAR
59 OUTPUT KEY

LONG MOTOR FLANGE AND COUPLING KIT (BM-STYLE)

110 "C" FACE MOTOR FLANGE
111 HEX HEAD CAP SCREW (flange to housing)
112 COUPLING KEY - REDUCER SHAFT
113 SETSCREW - REDUCER SHAFT
114 COUPLING GEAR - REDUCER SHAFT
115 COUPLING SLEEVE
116 SETSCREW - MOTOR SHAFT
117 COUPLING GEAR - MOTOR SHAFT
118 COUPLING KEY - MOTOR SHAFT
119 HEX HEAD CAP SCREW (motor to flange)
120 PLASTIC PLUG

VERTICAL SHAFT REQUIRED PARTS
(supplied only when mounting position involves a vertical shaft)

*129 OUTPUT COVER - CLOSED
*130 OUTPUT COVER - OPEN
*131 OUTPUT BEARING GREASE RETAINER
132 GREASE FITTING
133 SEALED BALL BEARING (only used on size 818 thru 826 units)
♦134 INPUT COVER
♦136 INPUT BEARING GREASE RETAINER

* ONLY USED ON SIZE 842 AND LARGER UNITS
♦ ONLY USED ON SIZE 830 AND LARGER UNITS
♣ SUPPLIED ONLY AS OUTPUT ASSEMBLY ON 813 THROUGH 824 UNITS
■ ONLY USED ON SIZES 813 - 832

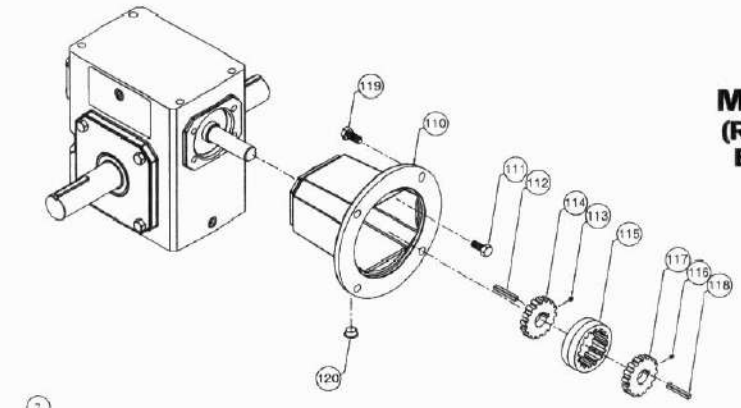

MODEL BM813-BM860
(Refer to Single Reduction Basic Unit Components)

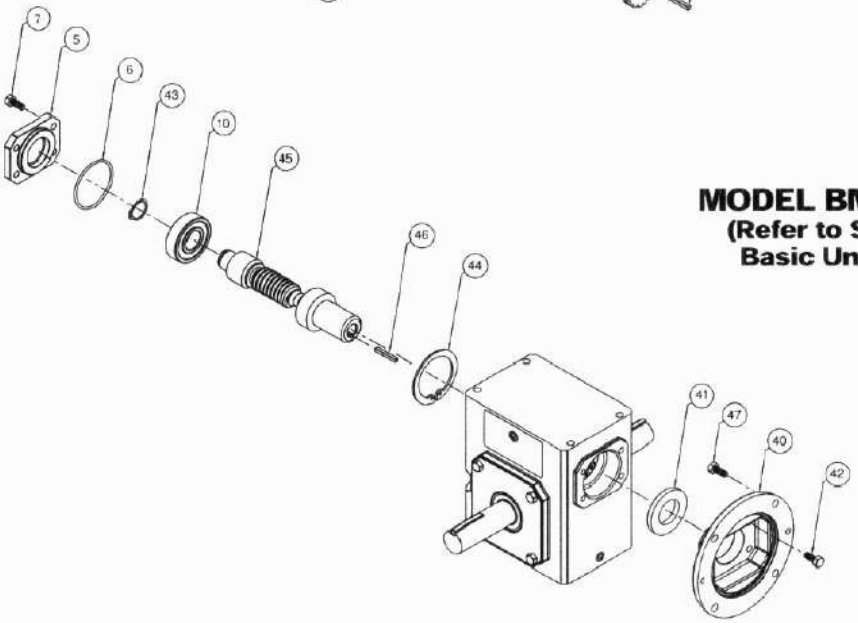

MODEL BMQ813-BMQ860
(Refer to Single Reduction Basic Unit Components)

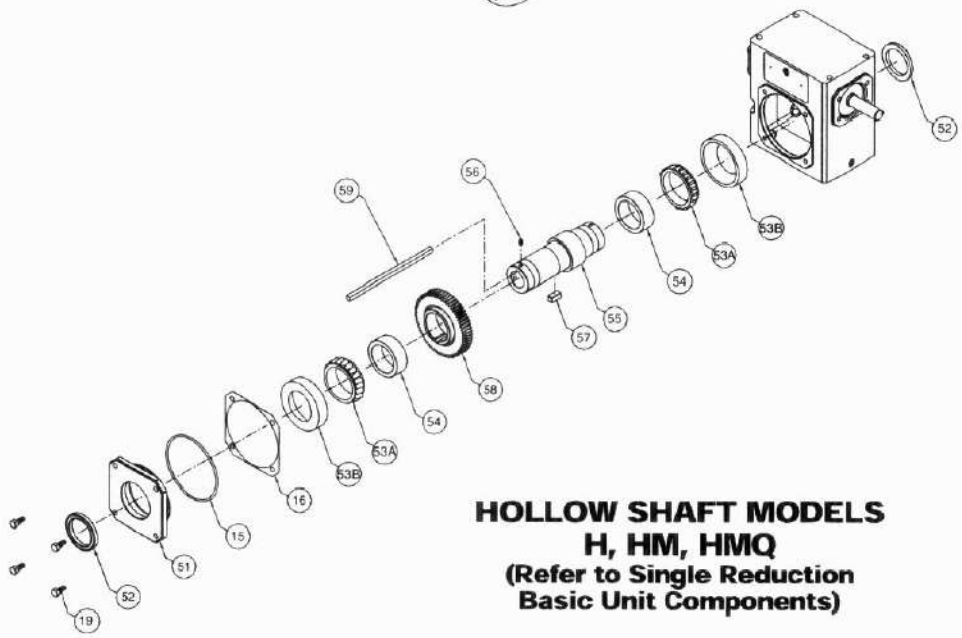

HOLLOW SHAFT MODELS
H, HM, HMQ
(Refer to Single Reduction Basic Unit Components)

Parts List

LEESON
OHIO GEAR

MODEL D813-D860
(Basic Unit Components)
DOUBLE REDUCTION

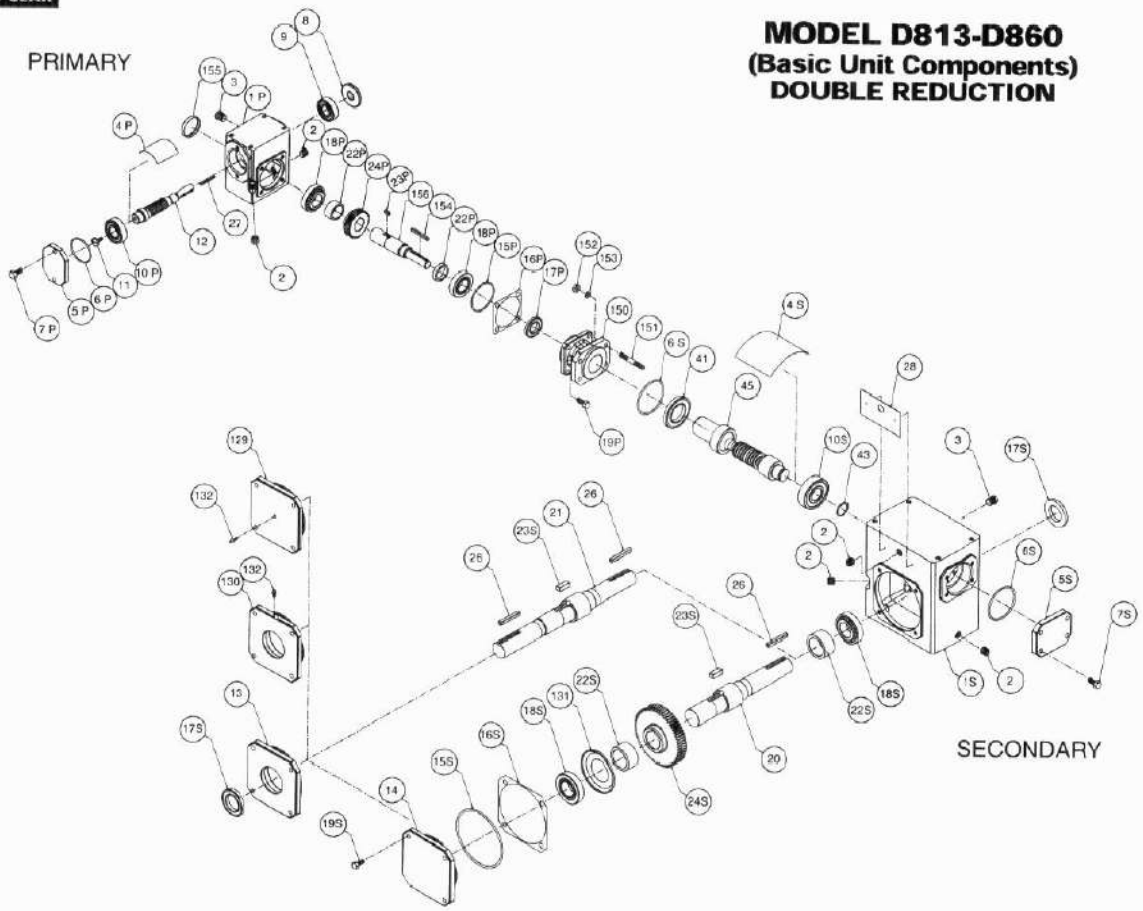

DOUBLE REDUCTION UNIT (D-STYLE)

ITEM # DESCRIPTION

1 HOUSING
2 PIPE PLUG
3 VENT PLUG
4 SPLASH GUARD
5 INPUT CAP
6 O-RING
7 HEX HEAD CAP SCREW
8 INPUT OIL SEAL
9 INPUT BEARING (cup and cone for 842 and larger units)
10 INPUT BEARING (cup and cone for 842 and larger units)
■11 RETAINING SCREW
12 INPUT WORM SHAFT
13 OUTPUT COVER - OPEN
14 OUTPUT COVER - CLOSED
15 O-RING
16 OUTPUT COVER SHIM (as required)
17 OUTPUT OIL SEAL
18 OUTPUT BEARING (18A. CONE, 18B. CUP)
19 HEX HEAD CAP SCREW
♣20 OUTPUT SHAFT - SINGLE
♣21 OUTPUT SHAFT - DOUBLE
22 GEAR SPACER
23 GEAR KEY (only used on size 826 and larger units)
♣24 OUTPUT GEAR
26 KEY - OUTPUT EXTENSION
27 KEY - INPUT EXTENSION
28 NAMEPLATE
41 INPUT OIL SEAL
43 RETAINING RING - SHAFT
45 QUILL INPUT SHAFT
150 DOUBLE REDUCTION ADAPTER
151 STUD
152 HEX NUT
153 LOCK WASHER
154 PRIMARY SOLID OUTPUT KEY
155 EXPANSION PLUG
156 PRIMARY SOLID OUTPUT SHAFT

QUILL MOTOR FLANGE UNIT (DMQ-STYLE)

40 QUILL MOTOR FLANGE
41 INPUT OIL SEAL
42 HEX HEAD CAP SCREW (flange to housing)
43 RETAINING RING - SHAFT
*44 RETAINING RING - HOUSING
45 QUILL INPUT SHAFT
46 KEY - INPUT
47 HEX HEAD CAP SCREW (motor to flange)

HOLLOW OUTPUT SHAFT UNIT (H-STYLE)

51 OUTPUT COVER
52 OUTPUT OIL SEAL
53 OUTPUT BEARING (53A. CONE, 53B. CUP)
54 GEAR SPACER
♣55 OUTPUT SHAFT
56 SETSCREW
57 GEAR KEY (only used on size 826 and larger units)
♣58 OUTPUT GEAR
59 OUTPUT KEY

LONG MOTOR FLANGE AND COUPLING KIT (BM-STYLE)

110 "C" FACE MOTOR FLANGE
42 HEX HEAD CAP SCREW (flange to housing)
112 COUPLING KEY - REDUCER SHAFT
113 SETSCREW - REDUCER SHAFT
114 COUPLING GEAR - REDUCER SHAFT
115 COUPLING SLEEVE
116 SETSCREW - MOTOR SHAFT
117 COUPLING GEAR - MOTOR SHAFT
118 COUPLING KEY - MOTOR SHAFT
47 HEX HEAD CAP SCREW (motor to flange)
120 PLASTIC PLUG

VERTICAL SHAFT REQUIRED PARTS

(supplied only when mounting position involves a vertical shaft)

*129 OUTPUT COVER - CLOSED
*130 OUTPUT COVER - OPEN
*131 OUTPUT BEARING GREASE RETAINER
132 GREASE FITTING
133 SEALED BALL BEARING (only used on size 818 thru 826 units)
♦134 INPUT COVER
♦136 INPUT BEARING GREASE RETAINER

* ONLY USED ON SIZE 842 AND LARGER UNITS
♦ ONLY USED ON SIZE 830 AND LARGER UNITS
♣ SUPPLIED ONLY AS OUTPUT ASSEMBLY ON 813 THROUGH 824 UNITS
■ ONLY USED ON SIZES 813 - 832

P - PRIMARY
S - SECONDARY

LEESON
OHIO GEAR

Parts List

IRONMAN BY OHIO GEAR

MODEL DM813-DM860
(Refer to Double Reduction Basic Unit Components)

MODEL DMQ813-DMQ852
(Refer to Double Reduction Basic Unit Components)

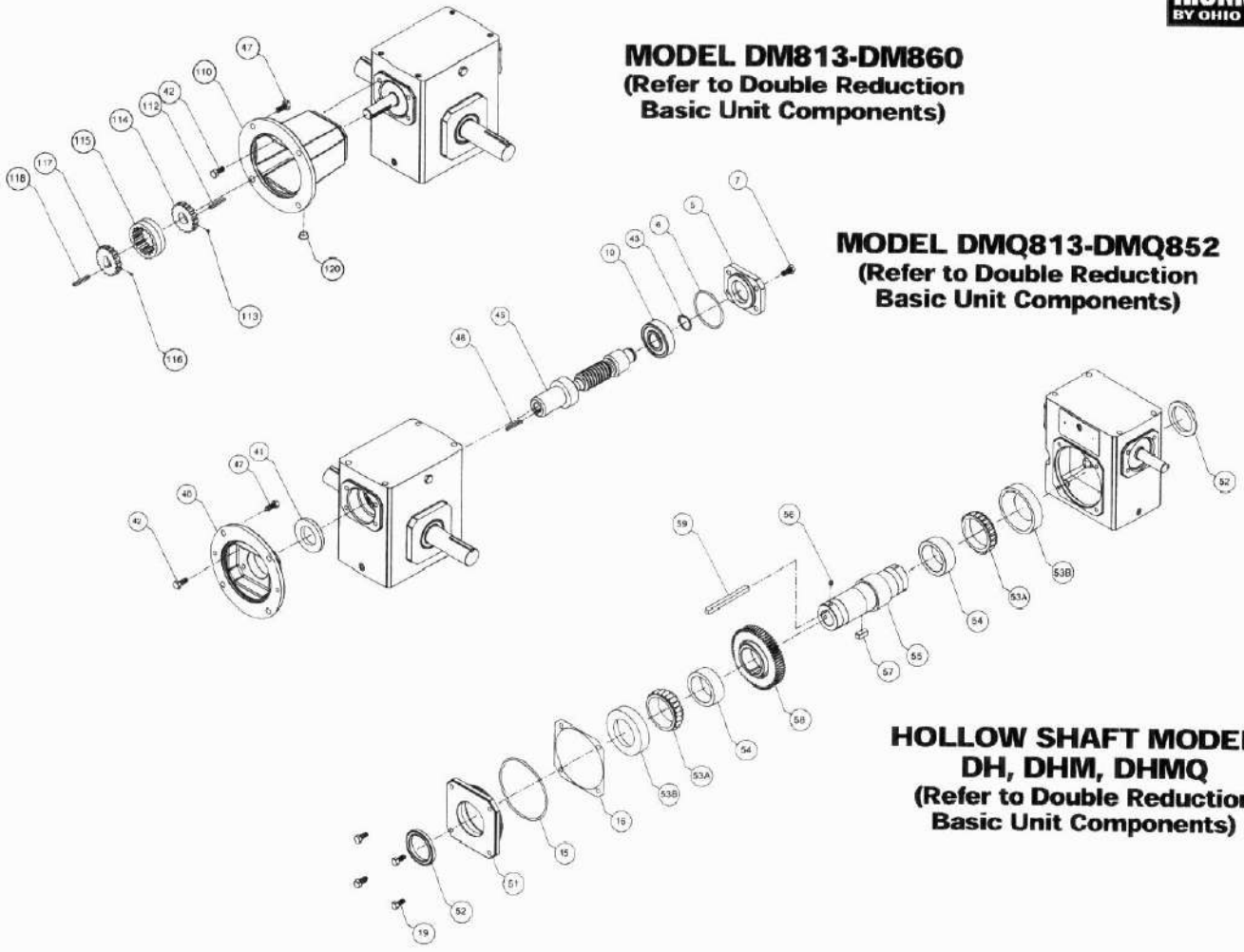

HOLLOW SHAFT MODELS DH, DHM, DHMQ
(Refer to Double Reduction Basic Unit Components)

STEEL MOUNTING ACCESSORIES

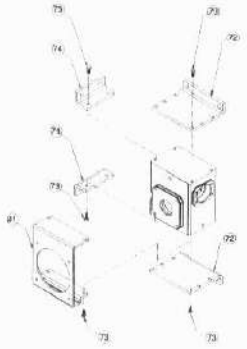

CAST MOUNTING ACCESSORIES

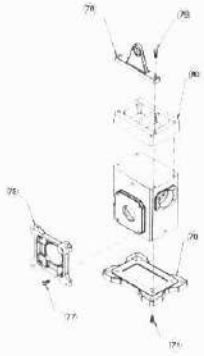

MOUNTING BRACKET OPTIONS	
70	HORIZONTAL MOUNTING BASE
71	CAP SCREW
72	HIGH AND LOW V-BRACKETS
73	HEX HEAD CAP SCREW
74	"J" MOUNT BRACKET
75	"F" OUTPUT FLANGE (CAST)
77	HEX HEAD CAP SCREW
78	TORQUE BRACKET
79	HEX HEAD CAP SCREW
80	RISER BLOCK
81	"FB" OUTPUT FLANGE (bent steel - only available thru size 826, excluding 815 units)

ENVIRO-SEAL

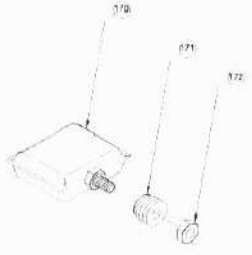

ENVIRO-SEAL ASSEMBLY	
170	ENVIRO-SEAL CHAMBER
171	ENVIRO-SEAL STEM PLUG
172	ENVIRO-SEAL STEM NUT

SUNFLOWER DRYING RECOMMENDATIONS FOR DELUX GRAIN DRYERS

THE FOLLOWING INFORMATION CONCERNS THE DRYING OF SUNFLOWERS IN DELUX DRYERS. THIS MATERIAL HAS BEEN SPECIALLY PREPARED TO ASSIST THE OPERATOR IN THE **SAFE AND EFFECTIVE** OPERATION OF THE DRYER FOR THIS PURPOSE.

IT IS VERY IMPORTANT TO COMPLETELY READ AND UNDERSTAND THESE RECOMMENDATIONS AND PRECAUTIONS PRIOR TO ATTEMPTING TO DRY SUNFLOWERS !!!

SUNFLOWER DRYING PRECAUTIONS

1. REFER TO YOUR SERVICE MANUAL FOR SUGGESTED DRYING TEMPERATURE SETTINGS.

2. **CLEAN SUNFLOWERS PRIOR TO DRYING.**

3. HARVEST WHEN SEEDS ARE BELOW 20% MOISTURE CONTENT. MOISTURE ABOVE 20% ADVERSELY AFFECTS THE FLOW CHARACTERISTICS OF THE SUNFLOWER SEEDS.

4. **NEVER LEAVE DRYER UNATTENDED WHILE DRYING SUNFLOWERS.**

5. ALL DELUX DRYERS ARE EQUIPPED WITH METER ROLL UNLOADING SYSTEMS AND SHOULD BE CHECKED FOR UNIFORM GRAIN MOVEMENT BY OBSERVING DOWNWARD MOVEMENT OF SUNFLOWERS IN THE GRAIN COLUMNS AND BY OCCASIONALLY STOPPING THE LOAD OPERATION TO OBSERVE THE LEVEL OF THE TOP SURFACE OF THE GRAIN. IF MOVEMENT IS NOT UNIFORM, OPEN APPROPRIATE CLEAN-OUT DOORS AND INSPECT FOR POSSIBLE OBSTRUCTIONS OR GRAIN BRIDGING. ALL DELUX DRYERS SHOULD ALSO BE COMPLETELY UNLOADED DAILY FOR CLEANING AND INSPECTION INSIDE THE GRAIN COLUMNS.

6. **KEEP THE DRYER CLEAN. PERIODICALLY INSPECT AND CLEAN INSIDE PLENUM AND COOLING CHAMBERS, ALONG WITH THE AREA SURROUNDING THE DRYER. FINE HAIRS AND FIBERS COMMON TO SUNFLOWERS CAN BE DRAWN INTO THE FAN-HEATER UNIT(S), INCREASING THE RISK OF FIRE.**

7. **BE PREPARED IN CASE OF FIRE.** HAVE A HOSE AND/OR FIRE EXTINGUISHER NEAR THE DRYER. SMALL FIRES (SOMETIMES CALLED FLARES) CAN BE EXTINGUISHED BY SHUTTING OFF THE AIRFLOW AND APPLYING WATER TO THE OVERHEATED AREA. MORE EXCESSIVE FIRES MAY REQUIRE COMPLETE UNLOADING OF THE DRYER ONTO THE GROUND. **DO NOT UNLOAD INTO A STORAGE BIN.**

8. CHECK THE DRYER FOR A BUILDUP OF WAXY MATERIAL THAT MAY ACCUMULATE ON AUGER FLIGHTING AND OTHER SURFACES WHEN HANDLING SUNFLOWERS (ESPECIALLY WITH HIGHER MOISUTRE SUNFLOWERS). IF BUILDUP IS EXCESSIVE, IT SHOULD BE REMOVED.

9. DO NOT OVERDRY. **SUNFLOWERS DRY EASILY AND OVERDRYING CAN INCREASE THE RISK OF FIRE.** SAFE STORAGE MOISTURE CONTENT IS 9% FOR SUNFLOWER SEEDS.